HAM-LET®
ADVANCED CONTROL TECHNOLOGY

QUALITY YOU CAN TRUST

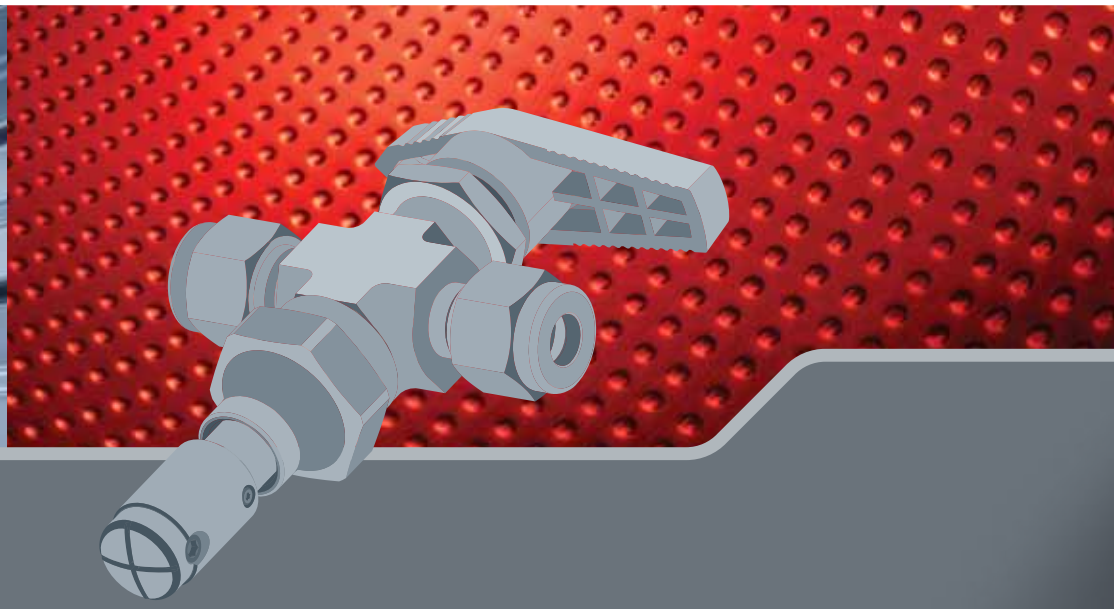

HAM-LET VALVES & FITTINGS

SERVING INDUSTRIES AROUND THE WORLD

Founded in 1950, the HAM-LET Group specializes in the design, development, production, and marketing of high quality instrumentation valves and fittings in a wide variety of materials for high pressure, temperature and vacuum applications. An accent on quality combined with ongoing research and development has given the company an international reputation for excellence. As a result, the HAM-LET Group today is the fastest growing company in this industry. Despite this growth, customers still receive personal attention, with best quality products and good delivery schedules.

Our products are used around the world in a wide range of industries, including Petrochemical, Semiconductor, Energy, Food, Biotechnology, Pharmaceutical, Defense, Pulp and Paper, and Mining.

HAM-LET®
ADVANCED CONTROL TECHNOLOGY

INDEX

HAM-LET®
ADVANCED CONTROL TECHNOLOGY

A. CONNECTORS

LET-LOK TUBE FITTINGS-GENERAL INFORMATION	07
LET-LOK INDEX	14
LET-LOK CHROMATOGRAPH FITTINGS	75
LET-LOK POSITIONABLES	76
HAM-LET DIELECTRIC FITTINGS	83
ALLOY 400/R-405 CONNECTORS	85
ALLOY C-276 CONNECTORS	87
ACCESSORIES	89
ONE-LOK FITTINGS	93
PIPELINE FITTINGS - GENERAL INFORMATION	97
PIPELINE FITTINGS - INDEX	99
PIPELINE FITTINGS - CATALOG SECTION	100
PUSHLOK HOSE END CONNECTORS	115
37° FLARE FITTINGS - GENERAL INFORMATION	119
37° FLARE FITTINGS - INDEX	122
37° FLARE FITTINGS - CATALOG SECTION	123
UHLINE ULTRA VACUUM SYSTEMS	141

B. HI TECH COMPONENTS

HTC HI TECH COMPONENTS - GENERAL INFO.	143
HTC HI TECH COMPONENTS - INDEX	146
GLANDS	148
MINI BUTTWELDS	152
SHAPED UNION	157
LONG WELD SHAPED CONNECTORS	159
THREADED STRAIGHT CONNECTORS	163
CAPS & NUTS	167
SWIVEL CONNECTORS	170
GASKETS	172
HIGH FLOW CONNECTORS	173

C. VALVES

BALL VALVES	
BALL VALVES H6800 SERIES	175
COMPACT ONE PIECE BALL VALVES H-800	185
3 PIECE BALL VALVES H-500 SERIES	193
2 PIECE BALL VALVES H-700 SERIES	205
NEEDLE, TOGGLE & METERING VALVES	
NEEDLE VALVES H-99 & H99HP SERIES	211
NEEDLE VALVES H-98 & H98HP SERIES	219
INTEGRAL BONNET NEEDLE VALVES H-300U	225
TOGGLE VALVES H-1200 SERIES	231
METERING VALVES H-1300 SERIES	235
CHECK, RELIEF & EXCESS FLOW VALVES	
CHECK VALVES H-400 SERIES	245
INDUSTRIAL EXCESS FLOW VALVES H-911	263
RELIEF VALVES H900 SERIES	269
RELIEF VALVES H900-HP SERIES	273

D. PNEUMATIC ACTUATORS

PNEUMATIC RACK AND PINION ACTUATORS	279

E. MANIFOLDS

HAM-LET ASTAVA LINE OF MANIFOLDS	301

F. FILTERS / QUICK CONNECTOR

T-TYPE & IN-LINE FILTER H-600R & H-600 SER.	315
VENT PROTECTOR FITTINGS VEP	323
INSTRUMENTATION QUICK CONNECTOR QC-LOK	325

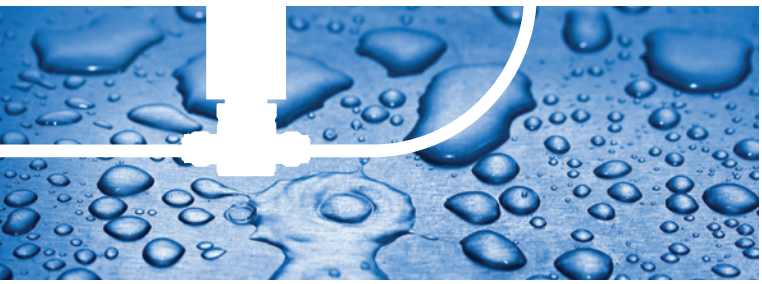

G. ULTRA CLEAN VALVES

INDEX	335
TECHNICAL INFORMATION	336
STANDARD PERFORMANCE	
COMPACT MODEL 2LE	338
FLOW CONTROL 2LM	339
STANDARD MODEL 2LD	340
3/4" HIGH FLOW 2LDS12	341
LOW PRESSURE MODEL EV	342
GENERAL PURPOSE EVZ	343
HIGH PRESSURE	
HIGH PRESSURE 2LH	344
HIGH PRESSURE HIGH-FLOW 2LS	345
METAL SEAT	
STANDARD METAL SEAT 3LD	346
HIGH TEMP. METAL SEAT 3LT	347
HIGH PRESSURE METAL SEAT	
HIGH PRES. - HIGH FLOW METAL SEAT 3LS	348
HP GRADE, HIGH PRESSURE EVH	349
HM SERIES	
TECHNICAL INFORMATION	354
STANDARD MODEL HM SERIES	355
SURFACE MOUNT HMS SERIES	360
COMPACT SURFACE MOUNT HMSC SERIES	361
COST EFFICIENT ULTRA CLEAN VALVES HMC SERIES	364
SURFACE MOUNT HYBRID VALVES	365
HD SERIES	
ECONOMIC DIAPHRAGM VALVES	366
HP SERIES	
HIGH PRESSURE DIAPHRAGM VALVES	368
MULTI PORT MONOBLOCK VALVES	
HMB AND 2BE SERIES	371

H.

FLEXIBLE METAL HOSES	377
FLEXIBLE TEFLON HOSES	381
SAMPLE CYLINDER	385
INSTALLATION INSTRUCTIONS	387

The most updated Ham-Let catalog is available on www.ham-let.com

USE HAM-LET QR BARCODE

LET-LOK TUBE FITTINGS
qr.ham-let.com/ltlk

UH LINE FITTINGS
qr.ham-let.com/uhln

2 PIECE BALL VALVES H-700
qr.ham-let.com/h700

METERING VALVE H-1300
qr.ham-let.com/1300

ONE-LOK TUBE FITTINGS
qr.ham-let.com/olft

HI TECH COMPONENTS
qr.ham-let.com/htc1

NEEDLE VALVE H99 & H99 HP
qr.ham-let.com/h99s

CHECK VALVES H-400 SERIES
qr.ham-let.com/h400

PIPELINE FITTINGS
qr.ham-let.com/pipe

HIGH PERFORMANCE BALL VALVE H-6800
qr.ham-let.com/6800

NEEDLE VALVE H98 & H98 HP
qr.ham-let.com/h98s

INDUSTRIAL EXCESS FLOW VALVES H911
qr.ham-let.com/h911

PUSHLOK FITTINGS
qr.ham-let.com/push

COMPACT ONE PIECE BALL VALVES H-800
qr.ham-let.com/h800

INTEGRAL BONNET NEEDLE VALVES H-300
qr.ham-let.com/h300

RELIEF VALVES H900 SERIES
qr.ham-let.com/h900

37 FLARE FITTINGS
qr.ham-let.com/37fl

3 PIECE BALL VALVES H-500
qr.ham-let.com/h500

TOGGLE VALVE H-1200
qr.ham-let.com/1200

RELIEF VALVES H900-HP SERIES
qr.ham-let.com/900h

HAM-LET®
ADVANCED CONTROL TECHNOLOGY

PNEUMATIC RACK AND PINION ACTUATORS
qr.ham-let.com/hpa1

UCV STANDARD PERFORMANCE
qr.ham-let.com/ucv1

UCV HMB FOR USA & EUROPE MARKET
qr.ham-let.com/hmbu

INSTALATAION INSTRUCTIONS
qr.ham-let.com/inst

HAM-LET ASTAVA MANIFOLDS
qr.ham-let.com/mani

UCV HIGH PRESSURE
qr.ham-let.com/cvhp

UCV HMB FOR EAST MARKET
qr.ham-let.com/hmbe

ACCESSORIES
qr.ham-let.com/accs

T-TYPE & IN-LINE FILTER
H-600R & H-600
qr.ham-let.com/h600

UCV METAL SEAT
qr.ham-let.com/cvms

FLEXIBLE METAL HOSE
qr.ham-let.com/fmh1

VENT PROTECTOR FITTINGS
qr.ham-let.com/vent

UCV HIGH PRESSURE METAL SEAT
qr.ham-let.com/cvhs

FLEXIBLE TEFLON HOSE
qr.ham-let.com/fth1

INSTRUMENTATION QUICK CONNECTOR QC-LOK
qr.ham-let.com/qclk

UCV HM SERIES
qr.ham-let.com/cvhm

SAMPLE CYLINDER
qr.ham-let.com/smpl

REGISTERED COMPANY

ISO 9001

QUALITY
YOU CAN TRUST

Quality is an integral part of the development, engineering, production and planning process at the HAM-LET Group. It is incorporated into the project starting from raw materials inspection, followed by ongoing quality assurance during production using Statistical Process Control (SPC) 6 and Total Quality Management (TQM), and finally through testing of the final product before delivery.

Ham-Let Group quality levels meet the highest standards including: ISO 9001, Lloyds, DNV, S.A.E. CE (P.E.D.), ISO 15500, ECE Regulation 110, ASME Standards and ASTM Standards.

© 2010 Ham-Let Ltd.
All material herein is the property of HAM-LET.
It is forbidden to copy, duplicate or use the material without the permission of the company. All product names and company names are trademarks of their respective owners.

HAM-LET®
ADVANCED CONTROL TECHNOLOGY

COMPRESSION TUBE FITTINGS

LET-LOK®

1/16” THROUGH 2” 2 MM THROUGH 50 MM

HAM-LET®
ADVANCED CONTROL TECHNOLOGY

LET-LOK® TUBE FITTINGS DESCRIPTION

The **HAM-LET**® GROUP has produced high quality tube and pipe fittings in various materials for high pressure applications since its establishment in 1950.

As a result of tremendous effors in research and development during the last five decades, **HAM-LET**® has gained an excellent reputation as a leading manufacturer of high pressure instrumentation products.

The **LET-LOK**® range of connectors has been developed to fill the rapidly increasing demand for tube fittings suitable for high pressure use in environments such as petrochemical, fluid, power, nuclear, electronic, as well as other major industrial settings.

LET-LOK® tube fittings have been carefully manufactured to withstand the persistent demands for high-performance tube fittings. Each one has passed a stringent tolerance test for high pressure, impulse, vibration, vacuum and temperature. These precision-machined fittings are manufactured to exacting standards, employing the most modern state-of-the-art computerized automation. All **LET-LOK**® fittings are backed by **HAM-LET**®'s commitment to the highest quality-control standards and skilled craftsmanship.

LET-LOK® HOW DOES IT WORK?

The **LET-LOK**® tube fitting is a mechanism used both to seal and to grip tubing. The mechanical advantage and geometry of this kind of fitting produces a leak-tight assembly.

To assemble, simply insert the tube into the complete assembly until the tube bottoms-out against the shoulder of the fitting body(**1**). The two ferrules are driven forward between the nut (**4**) and fitting body using the mechanical force created by rotating the nut clockwise. The back ferrule (**3**) is driven against the tapered rear of the front ferrule (**2**) and the front ferrule is driven by force into the tapered mouth of the body.
The rear ferrule is swaged radially inwards on the tube while lifting the front ferrule out to form a full-faced seal on the tapered surface of the body.

The 1 1/4 turn of the nut from the hand tight position assures consistent drive of the sealing members. This ensures an effective seal against high pressure as well as ultra high vacuum conditions.

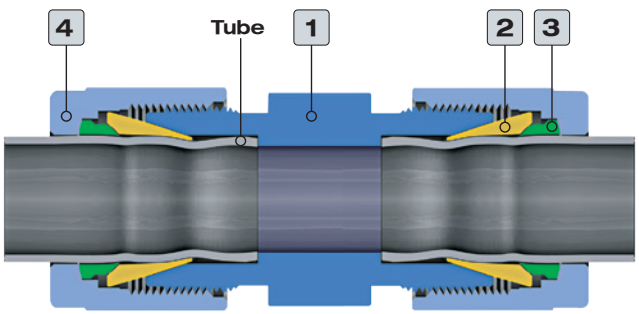

LET-LOK TUBE FITTINGS CONSIST OF FOUR PARTS:
1. BODY **2**. FRONT FERRULE **3**. BACK FERRULE **4**. NUT

LET-LOK® FITTINGS INSTALLATION INSTRUCTIONS

LET-LOK® fittings are supplied assembled and finger tight. Disassembly before use can allow the entry of dirt or other particles.

Insert the tubing into the LET-LOK® fitting.
Check that the tube rests firmly on the fitting shoulder and that the nut is finger tight. At this point it is recommended that a scribe mark be drawn on the hex of the nut extending onto the fitting body. This mark will serve as an indicator for the starting point and proper pull-up.

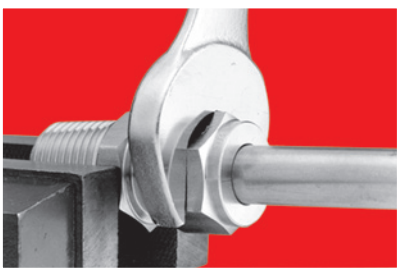

Tighten the nut.
1-1/4 turns of the nut are required for 1/4" (6 mm) and higher (see Fig. A). 3/4 turn of the nut is required for 3/16" (4 mm) and lower (see Fig. B).

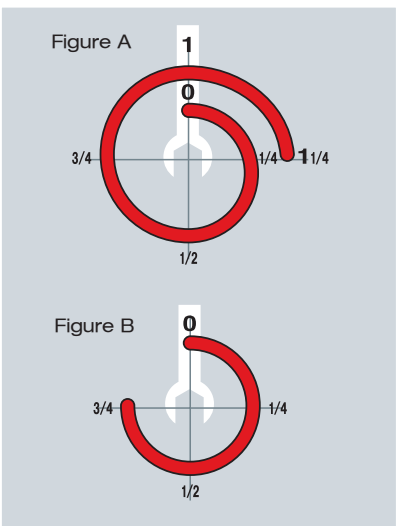

REASSEMBLY INSTRUCTIONS

LET-LOK® connections may be disconnected and remade repeatedly, without loss of leaktight seal.

1. Before disconnecting, mark the position of the nut in relation to the fitting body.
2. To reassemble, use a wrench to tighten nut to original position.
3. Tighten slightly with a wrench until a slight rise in torque is felt.

TUBE CUTTING

Two differnet methods can be used to cut tubes

1. Tube Cutter
2. Hacksaw

TUBE CUTTER

To attain a leak free connection, the tubing must be cut squarely. A good quality tube cutter with an appropriate blade for tubing material is recommended. Do not try to reduce the time of cutting by taking deep cuts with each turn of the cutter. This will work harden the tube.
The end of the tube must be deburred to avoid damage to the fitting and to ensure that the tube reaches the bottom of the fitting.

HACKSAW CUTTING

In order to cut the tube with a hacksaw and get square ends, the tube must be cut with guide blocks.
This method of cutting necessitates deburring of the tube ends.

Warning
Do not hold the tube in a vise in the place where it will be inserted into the fitting (the vise will leave a mark on the tube that may cause leaks, and might cause ovality).

TUBE HANDLING

Scratches on the tube might cause leaks. It is, therefore, important to handle the tube carefully to reduce the risk of leaks.

SOME PRECAUTIONS TO BE TAKEN

1. Tubes must not be dragged on the floor.
2. Tubes must not be dragged out of a tubing rack, especially in case of large OD tubes.

COPPER TUBING

If using copper tubing from a roll, hold the end of the tube and roll the roll outwards allowing the tubing to lie on a flat surface.

INSPECTION GAUGE

Use: This is a "No-Go" gauge and should be used as follows:

1. Make up the fitting according to the following instructions:
   1/4 inch (6mm), 3/8 inch, 1/2 inch (12mm) make up 1-1/4 turns from finger tight.
2. Check gap between nut and body, using the appropriatesized gauge. If the gauge slides easily into the gap, tighten the nut further until gauge cannot enter the gap.

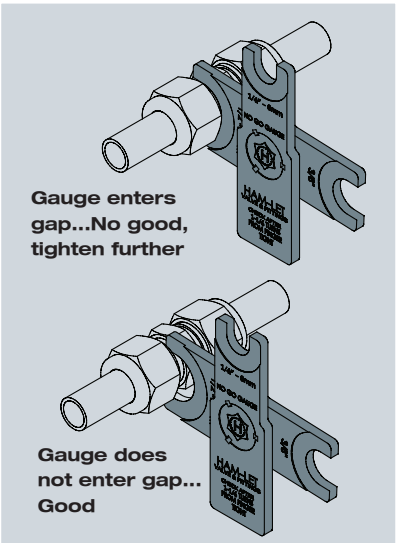

For Gauge Ordering Information:
See page 89 .

LET-LOK® FITTINGS INSTALLATION INSTRUCTIONS

PHYSICAL DIFFERENCES AND MARKINGS

LET–LOK® METRIC FITTINGS:

Tee & Elbow (see Fig. 1)
Body marked: MM
Straight Connectors: (see Fig. 2)

Body: Stepped shoulder
Marked: LET–LOK 316 AV1[2]
Nut: (see Figs.1 & 2) Stepped shoulder
Marked: LET–LOK 316 6M[1] SD8[2]

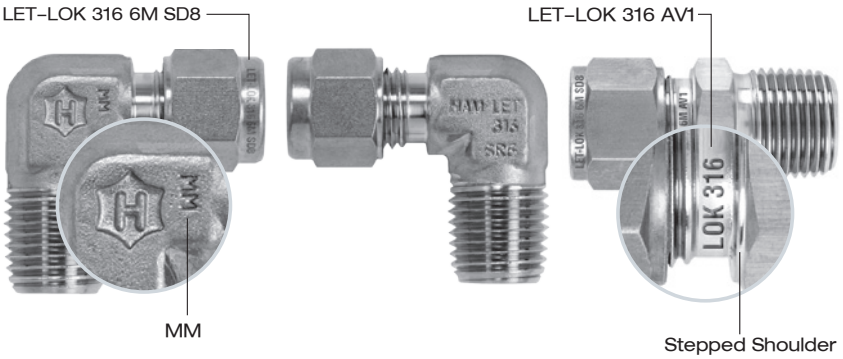

Fig. **1**
Back side

Fig. **1**
Front side

Fig. **2**
Stepped Shoulder

[1] Tube O.D. [2] Material Batch

LET–LOK® INCH FITTINGS:

Tee & Elbow: (See Fig. 3)
Straight Fittings: (see Fig. 4)
Body: Shoulder marked:
LET–LOK 316 AV2[2]

Nut: (See Fig. 3 & 4): Shoulder marked
LET–LOK 316 1/2[1] BU2[2]

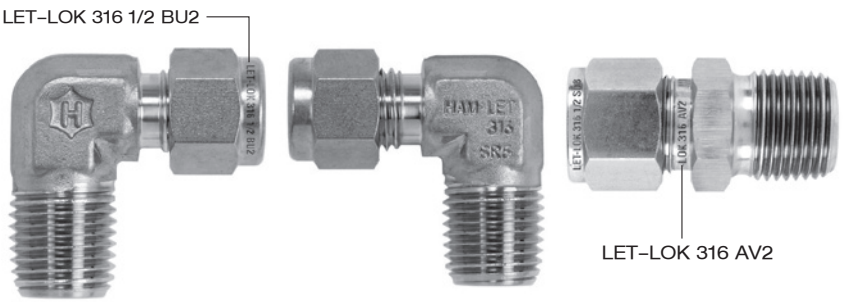

Fig. **3**
Back side

Fig. **3**
Front side

Fig. **4**

[1] Tube O.D. [2] Material Batch

HIGH SAFETY

In applications where severe conditions and high pressure exist, we recommend the following installation procedures:

1. Check that the nut is finger tight.
2. Insert the tube (up to the shoulder).
3. Rotate the nut with a wrench until the tube does not rotate freely.
4. Mark position of the nut.
5. Rotate the nut 1–1/4 turns.

This method ensures that even if the tube O.D. is at the minimum tolerance, the ferrules will be in contact with the tube for the full 1–1/4 rotation.

TUBING DATA FOR LET–LOK® FITTINGS

In order to assure maximum fitting reliability and performance, great care should be given when selecting the tubing for each application.

TUBE SELECTION

Four variables must be considered when ordering tube for use with **LET–LOK®** fittings:

1. Material
2. Tube wall thickness
3. Tube surface finish
4. Tube hardness

Tubing should comply with standard ASTM A213 or ASTM A269, be seamless, and fully annealed.
The tube must be free of scratches and suitable for bending and flaring.

TUBE OD TOLERANCES

1/16" – 1/8" 2mm – 3 mm	±	**0.003"** **0.076 mm**
3/16" – 1 1/4" 4mm – 25 mm	±	**0.005"** **0.127 mm**
1 1/2" – 2" 38mm – 50 mm	±	**0.006"** **0.152 mm**

Ovality of twice OD tolerance is not suitable for LET–LOK fittings. The tube must be reasonably round.
The ends of the tube must be free of burrs.

Tubing hardness: The hardness of the tube must be lower than the hardness of the fitting material.

The hardness must not exceed Rockwell 90 HRB (200HV).

TUBING DATA

TABLE 1: STAINLESS STEEL INCH TUBING

Tubing O.D.	WALL THICKNESS OF TUBE IN INCH															
inch	0.010	0.012	0.014	0.016	0.020	0.028	0.035	0.049	0.065	0.083	0.095	0.109	0.120	0.134	0.156	0.188
1/16	5600	6860	8150	9480	12080											
1/8						8550	10950									
3/16						5500	7100	10300								
1/4						4100	5200	7600	10300							
5/16							4100	5900	8100							
3/8							3350	4850	6550							
1/2							2650	3750	5150	6750						
5/8								2950	4050	5250	6050					
3/4								2450	3350	4250	4950	5850				
7/8								2050	2850	3650	4250	4850				
1									2400	3100	3600	4200	4700			
1 1/4										2400	2800	3300	3600	4100	4900	
1 1/2											2300	2700	3000	3400	4000	4900
2												2000	2200	2500	2900	3600

Annealed 304 or 316 stainless steel tubing complying with ASTM A213, A269 or equivalent specifications. For metal temp. from -20°F - 100°F (-29°C - 37°C). Suggested ordering information: Fully annealed high quality (Type 304 or 316) stainless steel hydraulic tubing ASTM A269 or A213 or equivalent, seamless or welded and drawn with a hardness of 90HRB (200HV) or less. Tubing should be without scratches and suitable for flaring and bending.

TABLE 2: STAINLESS STEEL METRIC TUBING

Tubing O.D.	WALL THICKNESS OF TUBE IN MM													
mm	0.8	1.0	1.2	1.5	1.8	2.0	2.2	2.5	2.8	3.0	3.5	4.0	4.5	5.0
3	670													
6	310	420	540	710										
8		310	390	520										
10		240	300	400	510	580								
12		200	250	330	410	470								
14		160	200	270	340	380	430							
15		150	190	250	310	360	400							
16			170	230	290	330	370	400						
18			150	200	260	290	320	370						
20			140	180	230	260	290	330	380					
22			120	160	200	230	260	300	340					
25					180	200	230	260	290	320				
38							140	160	190	200	240	270	310	
50										150	180	210	240	270

Annealed 304 or 316 stainless steel tubing complying with ASTM A213, A269 or equivalent specifications. For metal temp. from -20°F - 100°F (-29°C - 37°C). Suggested ordering information: Fully annealed high quality (Type 304 or 316) stainless steel hydraulic tubing ASTM A269 or A213 or equivalent, seamless or welded and drawn with a hardness of 90HRB (200HV) or less. Tubing should be without scratches and suitable for flaring and bending.

WARNING! For Your Safety The system designer and user have the sole responsibility to select products suitable for their special application requirements and to ensure the proper installation, operation and maintenance of the product. Please consider application details, material compatibility and product ratings when making your selection. Improper selection or use of products can cause property damage or personal injury.

TUBING DATA

TABLE 3: COPPER TUBING WALL THICKNESS OF TUBE IN INCHES

Tubing O.D. mm	Tubing O.D. inch	0.028	0.035	0.049	0.065	0.083	0.095	0.109	0.120
2	1/8	2700	3600						
3	3/16	1800	2300	3400					
6	1/4	1300	1600	2500	3500				
8	5/16		1300	1900	2700				
10	3/8		1000	1600	2200				
12	1/2		800	1100	1600	2100			
16	5/8			900	1200	1600	1900		
20	3/4			700	1000	1300	1500	1800	
22	7/8			600	800	1100	1300	1500	
25	1			500	700	900	1100	1300	1500

Annealed copper seamless tubing complying with ASTM B68 and ASTM B75 specified in temper designation 060. Based on ultimate tensile strength of 30,000 psi (2067 bar). For metal temperatures from -20°C to 37°C). Suggested ordering information: High quality soft annealed seamless copper tubing ASTM B75 or equivalent.

TABLE 4: FACTORS USED TO DETERMINE ALLOWABLE PRESSURE AT HIGHER TEMPERATURES

°F	°C	A.I.S.I. 316	Copper
200	93	1	0.80
400	204	0.96	0.50
600	316	0.85	-
800	427	0.79	-
1000	538	0.76	-
1200	649	0.37	-

To determine allowable pressure at higher temperatures, multiply allowable working pressure from Tables 1 & 2 & 3 by factor shown in Table 4.
For example: The allowable pressure for Type 316 stainless steel, size 1/2" OD x .049" wall at 800°F(427°C) would be equivalent to 3750 psi x 0.79 = 2962.5 psi.

TABLE 5: GAS APPLICATION TUBING

INCH		METRIC	
Tubing O.D.	Min. Nominal Wall Thickness	Tubing O.D.	Min. Nominal Wall Thickness
1/8"	0.028"	3 mm	0.8 mm
3/16"	0.028"	6 mm	0.8 mm
1/4"	0.028"	8 mm	1.0 mm
5/16"	0.035"	10 mm	1.0 mm
3/8"	0.035"	12 mm	1.0 mm
1/2"	0.049"	14 mm	1.2 mm
5/8"	0.065"	16 mm	1.5 mm
3/4"	0.065"	18 mm	1.5 mm
7/8"	0.083"	20 mm	1.8 mm
1"	0.083"	22 mm	2.0 mm
1 1/4"	0.109"	25 mm	2.2 mm
1 1/2"	0.134"	38 mm	3.5 mm
2"	0.188"	50 mm	5.0 mm

Gases are characterized by small molecules, which can escape through the smallest leak path. For gas applications, we recommend to select tubing with greater wall thickness. Table 5 shows the recommended wall thicknesses for greater safety and efficiency.

WARNING! For Your Safety The system designer and user have the sole responsibility to select products suitable for their special application requirements and to ensure the proper installation, operation and maintenance of the product. Please consider application details, material compatibility and product ratings when making your selection. Improper selection or use of products can cause property damage or personal injury.

PRESSURE RATINGS

Pressure Ratings for HAM-LET Tube Fittings

To ensure leak-tight systems, it is important to carefully select high-quality tubing (see page 11 - Allowable working pressure).

Pipe End Thread (NPT and ISO 7) Pressure Ratings

Allowable pressure for male and female tapered pipe thread ends, Stainless Steel 316 and Brass.

TABLE 6: PRESSURE RATINGS

NPT / ISO Pipe Size	Stainless Steel 316		Brass	
	Male	Female	Male	Female
inch	psi			
1/16	11000	6700	5500	3300
1/8	10000	6500	5000	3200
1/4	8000	6600	4000	3300
3/8	7800	5300	3900	2600
1/2	7700	4900	3800	2400
3/4	7300	4600	3600	2300
1	5300	4400	2600	2200
1 1/4	6000	5000	3000	2500
1 1/2	5000	4600	2500	2300
2	3900	3900	1900	1900

Note: If pressure on LET-LOK end is higher than the pipe side, then pipe side needs heavier wall thickness of tapered pipe thread side.

Pressure Ratings for End Fittings per SAE J1926 (LOB) Surrounding Temperature

Pressure ratings are based on SAE J1926 at surrounding temperature.

TABLE 7: PRESSURE RATINGS

(LOB) SAE J1926 Thread Size	Stainless Steel 316	
	Nonpositionable	Positionable
inch	psi	
5/16 - 24	4568	4568
7/16 - 20	4568	4568
1/2 - 20	4568	4568
9/16 - 18	4568	3626
3/4 - 16	4568	3626
7/8 - 14	3626	2900
1 1/16 - 12	3626	2900
1 3/16 - 12	2900	2320
1 5/16 - 12	2900	2320
1 5/8 - 12	2320	1813
1 7/8 - 12	2320	1813
2 1/2 - 12	1813	1450

Note: 37° FLARE (AN) and LO ends can have lower pressure

O-Seal Pressure Ratings (page 45)

Stainless steel 316 O-seal fittings up to 1" and 25 mm are rated to 3000 psi.

Positionable, ISO/BSP Parallel Thread (G) Pressure Ratings

Pressure ratings are at surrounding temperature.

TABLE 8: PRESSURE RATINGS

(G) ISO / BSPP Male Pipe size	Stainless Steel 316
inch	psi
1/8	4568
1/4	4568
3/8	4568
1/2	2320

LET-LOK® INDEX

BACK FERRULE 16
760 LB

FRONT FERRULE 16
760 LF

TUBE INSERT 17
760 LI

NUT 17
761 L

UNION 18
762 L

REDUCING UNION 19
763 L

UNION TEE 21
764 L

REDUCING TEE 22
764 LR

UNION ELBOW 24
765 L

REDUCING UNION ELBOW 25
765 LR

FEMALE CONNECTOR 26
766 L

FEMALE CONNECTOR 28
766 LR

FEMALE CONNECTOR 30
766 LG

REDUCER 31
767 LT

REDUCING PORT CONNECTOR 34
767 LM

PORT CONNECTOR 35
767 LP

MALE CONNECTOR 36
768 L

MALE CONNECTOR 39
768 LR

MALE CONNECTOR 41
768 LG

MALE CONNECTOR 43
768 LOK

MALE CONNECTOR 44
768 LOB

MALE CONNECTOR 46
768 LOP

MALE CONNECTOR 46
768 LO

MALE PIPE WELD CONNECTOR 47
768 LN

TUBE SOCKET WELD UNION 48
768 LW

MALE ELBOW 49
769 L

MALE ELBOW 51
769 LR

MALE PIPE WELD ELBOW 52
769 LN

SOCKET WELD ELBOW 53
769 LW

REDUCING ELBOW 53
769 LT

FEMALE ELBOW 54
770 L

MALE RUN TEE 55
771 L

FEMALE RUN TEE 56
771 LF

MALE BRANCH TEE 57
772 L

FEMALE BRANCH TEE 58
772 LF

BULKHEAD UNION 59
774 L

BULKHEAD FEMALE CONNECTOR 774 LF 60

BULKHEAD REDUCER 774 LT 60

BULKHEAD MALE CONNECTOR 774 LM 61

BULKHEAD REDUCING UNION 775 L 62

UNION CROSS 7102 L 63

CAP 7108 L 64

PLUG 7121 L 65

FEMALE ADAPTER TUBE TO PIPE 739 LF 66

MALE ADAPTER TUBE TO PIPE 739 LM 68

MALE ADAPTER TUBE TO PIPE 739 LMR 70

WELD ADAPTER TUBE TO PIPE 739 LN 71

SOCKET WELD ADAPTER 739 LW 71

MALE ADAPTER 739 LMOB 72

LET-LOK TO AN ADAPTER 761 LFL 73

LET-LOK TO AN UNION 762 LFL 73

LET-LOK TO AN BULKHEAD UNION 774 LFL 73

MALE ADAPTER TUBE TO AN 739 LTFL 74

MALE NUT 961 L 75

UNION 962 L 75

REDUCING UNION 963 L 75

UNION TEE 964 L 75

POSITIONABLES 76

UNION DIELECTRIC 762 L Dielectric 83

ALLOY 400 CONNECTOR 85

ALLOY C-276 CONNECTOR 87

ACCESSORIES 89

STOP COLLAR 92

LET–LOK® MATERIAL DESCRIPTION

EXAMPLE: 768L

Material Description	
SS -	Stainless Steel 316
B -	Brass
M -	Monel 400
HC -	Hastelloy C-276

1/4 X 1/4

All orders should include material description and ordering information (See product table).

760 LB
BACK FERRULE

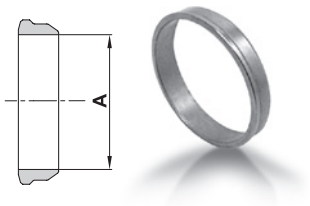

METRIC	
Ordering Information	A Tube O.D. mm
760LB _ 2	2
760LB _ 3	3
760LB _ 4	4
760LB _ 6	6
760LB _ 8	8
760LB _ 10	10
760LB _ 12	12
760LB _14	14
760LB _ 15	15
760LB _ 16	16
760LB _ 18	18
760LB _ 20	20
760LB _ 22	22
760LB _ 25	25
760LB _ 38 *	38
760LB _ 50 *	50

INCH		
Ordering Information	A Tube O.D.	
	inch	mm
760LB _ 1/16	1/16	1.58
760LB _ 1/8	1/8	3.17
760LB _ 3/16	3/16	4.76
760LB _ 1/4	1/4	6.35
760LB _ 5/16	5/16	7.93
760LB _ 3/8	3/8	9.52
760LB _ 1/2	1/2	12.70
760LB _ 5/8	5/8	15.87
760LB _ 3/4	3/4	19.05
760LB _ 7/8	7/8	22.22
760LB _ 1	1	25.40
760LB _ 1 1/4 *	1 1/4	31.75
760LB _ 1 1/2 *	1 1/2	38.10
760LB _ 2 *	2	50.80

*Without Ferrule Set.

760 LF
FRONT FERRULE

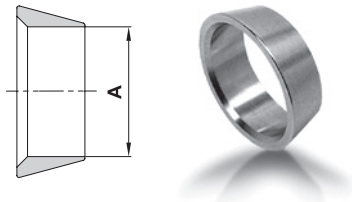

METRIC	
Ordering Information	A Tube O.D. mm
760LF _ 2	2
760LF _ 3	3
760LF _ 4	4
760LF _ 6	6
760LF _ 8	8
760LF _ 10	10
760LF _ 12	12
760LF _ 14	14
760LF _ 15	15
760LF _ 16	16
760LF _ 18	18
760LF _ 20	20
760LF _ 22	22
760LF _ 25	25
760LF _ 38 *	38
760LF _ 50 *	50

INCH		
Ordering Information	A Tube O.D.	
	inch	mm
760LF _ 1/16	1/16	1.58
760LF _ 1/8	1/8	3.17
760LF _ 3/16	3/16	4.76
760LF _ 1/4	1/4	6.35
760LF _ 5/16	5/16	7.93
760LF _ 3/8	3/8	9.52
760LF _ 1/2	1/2	12.70
760LF _ 5/8	5/8	15.87
760LF _ 3/4	3/4	19.05
760LF _ 7/8	7/8	22.22
760LF _ 1	1	25.40
760LF _ 1 1/4 *	1 1/4	31.75
760LF _ 1 1/2 *	1 1/2	38.10
760LF _ 2 *	2	50.80

*Without Ferrule Set.

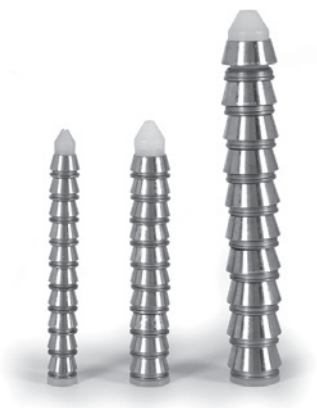

FERRULE SETS

All LET-LOK Ferrules are available as sets. Ferrule sets simplify stocking and assembly. Ferrule sets prevent damage of single ferrules during shipping.

The back and front ferrules are arranged as pairs in the set; ready for easy assembly.

Note: Can be supplied also with Nuts.
Example: 760LNS SS 1/4

ORDERING INFORMATION FOR FERRULE SETS

EXAMPLE: 760LS SS 1/4

SS =	Stainless Steel 316
B =	Brass
M =	Monel 400
HC =	Hastelloy C-276
T =	Teflon

Ferrules Material

Tube O.D.
The O.D. size is always the first to be described

Dimensions are for reference only, and are subject to change without notice.

760 LI
TUBE INSERT

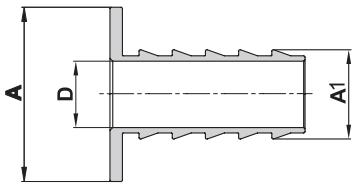

METRIC

Ordering Information	A Tube O.D.	A1 Tube I.D.	D
	mm	mm	mm
760LI _ 6 X 4	6	4	2.8
760LI _ 8 X 6	8	6	4.4
760LI _ 10 X 8	10	8	6.4
760LI _ 12 X 8	12	8	6.4
760LI _ 12 X 10	12	10	8.3

INCH

Ordering Information	A Tube O.D.		A1 Tube I.D.		D	
	inch	mm	inch	mm	inch	mm
760LI _ 3/16 X 1/8	3/16	4.76	1/8	3.17	.09	2.30
760LI _ 1/4 X 1/8	1/4	6.35	1/8	3.17	.09	2.30
760LI _ 1/4 X 0.17	1/4	6.35	.17	4.32	.11	2.70
760LI _ 1/4 X 3/16	1/4	6.35	3/16	4.76	.12	3.10
760LI _ 5/16 X 1/8	5/16	7.93	1/8	3.17	.09	2.30
760LI _ 5/16 X 3/16	5/16	7.93	3/16	4.76	.12	3.00
760LI _ 5/16 X 1/4	5/16	7.93	1/4	6.35	.18	4.65
760LI _ 3/8 X 3/16	3/8	9.52	3/16	4.76	.12	3.10
760LI _ 3/8 X 1/4	3/8	9.52	1/4	6.35	.18	4.65
760LI _ 1/2 X 1/4	1/2	12.70	1/4	6.35	.18	4.65
760LI _ 1/2 X 3/8	1/2	12.70	3/8	9.52	.31	7.80
760LI _ 5/8 X 3/8	5/8	15.87	3/8	9.52	.31	7.80
760LI _ 5/8 X 1/2	5/8	15.87	1/2	12.70	.44	11.10
760LI _ 3/4 X 1/2	3/4	19.05	1/2	12.70	.44	11.10
760LI _ 3/4 X 5/8	3/4	19.05	5/8	15.87	.56	14.20
760LI _ 1 X 3/4	1	25.40	3/4	19.05	.69	17.50

761 L
NUT

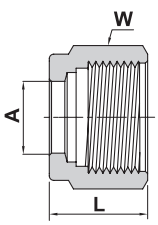

METRIC

Ordering Information	A Tube O.D.	W Hex. Flat	L
	mm	mm	mm
761L _ 2	2	12	11.9
761L _ 3	3	12	11.9
761L _ 4	4	12	11.9
761L _ 6	6	14	12.7
761L _ 8	8	16	13.5
761L _ 10	10	19	15.1
761L _ 12	12	22	17.4
761L _ 14	14	25	17.4
761L _ 15	15	25	17.4
761L _ 16	16	25	17.4
761L _ 18	18	30	17.4
761L _ 20	20	32	17.4
761L _ 22	22	32	17.4
761L _ 25	25	38	20.6
761L _ 38	38	60	40.6
761L _ 50	50	3 inch	54.0

INCH

Ordering Information	A Tube O.D.		W Hex. Flat	L	
	inch	mm	inch	inch	mm
761L _ 1/16	1/16	1.58	5/16	.31	7.87
761L _ 1/8	1/8	3.17	7/16	.47	11.93
761L _ 3/16	3/16	4.76	1/2	.47	11.93
761L _ 1/4	1/4	6.35	9/16	.50	12.70
761L _ 5/16	5/16	7.93	5/8	.53	13.46
761L _ 3/8	3/8	9.52	11/16	.56	14.22
761L _ 1/2	1/2	12.70	7/8	.69	17.52
761L _ 5/8	5/8	15.87	1	.69	17.52
761L _ 3/4	3/4	19.05	1 1/8	.69	17.52
761L _ 7/8	7/8	22.22	1 1/4	.69	17.52
761L _ 1	1	25.40	1 1/2	.81	20.57
761L _ 1 1/4	1 1/4	31.75	1 7/8	1.25	31.75
761L _ 1 1/2	1 1/2	38.10	2 1/4	1.50	38.10
761L _ 2	2	50.80	3	2.06	52.32

"**D**" - Dimension is minimum opening. Dimensions are for reference only, and are subject to change without notice.

762 L

UNION

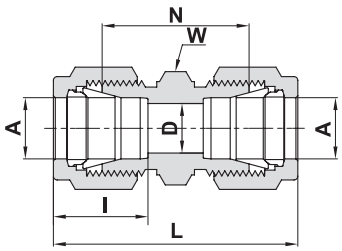

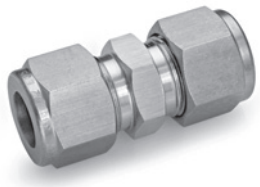

TUBE (METRIC) TO TUBE (METRIC)

Ordering Information	A Tube O.D.	D	W Hex. Flat	N	L	I
	mm	mm	mm	mm	mm	mm
762L _ 2	2	1.7	12	22.4	35.6	12.9
762L _ 3	3	2.4	12	22.1	35.3	12.9
762L _ 4	4	2.4	12	24.1	37.3	13.7
762L _ 6	6	4.8	14	26.2	41.0	15.3
762L _ 8	8	6.4	15	28.2	43.2	16.2
762L _ 10	10	7.9	18	31.0	46.2	17.2
762L _ 12	12	9.5	22	31.0	51.2	22.8
762L _ 14	14	11.1	24	31.8	52.0	24.4
762L _ 15	15	11.9	24	31.8	52.0	24.4
762L _ 16	16	12.7	24	31.8	52.0	24.4
762L _ 18	18	15.1	27	33.3	53.5	24.4
762L _ 20	20	15.9	30	34.8	55.0	26.0
762L _ 22	22	18.3	30	34.8	55.0	26.0
762L _ 25	25	21.8	35	40.4	65.0	31.3
762L _ 38	*38	33.7	55	58.4	114.0	49.4
762L _ 50	*50	45.2	3 inch	71.7	146.0	65.0

TUBE (INCH) TO TUBE (INCH)

Ordering Information	A Tube O.D.		D		W Hex. Flat	N		L		I	
	inch	mm	inch	mm	inch	inch	mm	inch	mm	inch	mm
762L _ 1/16	1/16	1.58	.05	1.27	5/16	.69	17.52	.99	25.14	.34	8.6
762L _ 1/8	1/8	3.17	.09	2.28	7/16	.88	22.35	1.40	35.56	.50	12.7
762L _ 3/16	3/16	4.76	.12	3.04	7/16	.95	24.13	1.47	37.33	.54	13.7
762L _ 1/4	1/4	6.35	.19	4.82	1/2	1.03	26.16	1.61	40.89	.60	15.2
762L _ 5/16	5/16	7.93	.25	6.35	9/16	1.11	28.19	1.69	42.92	.64	16.2
762L _ 3/8	3/8	9.52	.28	7.11	5/8	1.19	30.22	1.77	44.95	.66	16.8
762L _ 1/2	1/2	12.70	.41	10.41	13/16	1.22	30.98	2.02	51.30	.90	22.9
762L _ 5/8	5/8	15.87	.50	12.70	15/16	1.25	31.75	2.05	52.07	.96	24.4
762L _ 3/4	3/4	19.05	.62	15.75	1 1/16	1.31	33.27	2.11	53.59	.96	24.4
762L _ 7/8	7/8	22.22	.72	18.28	1 3/16	1.37	34.80	2.17	55.11	1.02	25.9
762L _ 1	1	25.40	.88	22.35	1 3/8	1.59	40.38	2.55	64.77	1.23	31.2
762L _ 1 1/4	*1 1/4	31.75	1.09	27.70	1 3/4	1.89	48.00	3.63	92.20	1.62	41.2
762L _ 1 1/2	*1 1/2	38.10	1.34	34.00	2 1/8	2.11	53.60	4.25	107.95	1.97	50.0
762L _ 2	*2	50.80	1.81	45.97	2 3/4	2.94	74.67	5.88	149.35	2.66	67.6

* Including low friction paste, See page 89

"D" - Dimension is minimum opening. Dimensions are for reference only, and are subject to change without notice.

763 L

REDUCING UNION

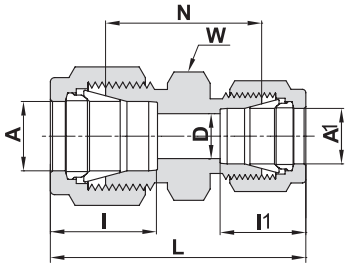

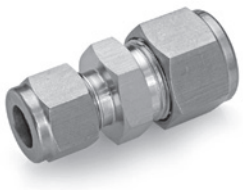

TUBE (METRIC) TO TUBE (METRIC)

Ordering Information	A Tube O.D.	A1 Tube O.D.	D	W Hex. Flat	N	L	I	I1
	mm	mm	mm	mm	mm	mm	mm	mm
763L _ 3 X 2	3	2	1.7	12	22.1	35.3	12.9	12.9
763L _ 6 X 2	6	2	1.7	14	24.6	38.6	15.3	12.9
763L _ 6 X 3	6	3	2.4	14	24.6	38.6	15.3	12.9
763L _ 6 X 4	6	4	2.4	14	25.4	39.4	15.3	13.7
763L _ 8 X 6	8	6	4.8	15	27.4	42.3	16.2	15.3
763L _ 10 X 6	10	6	4.8	18	29.5	44.5	17.2	15.3
763L _ 10 X 8	10	8	6.4	18	30.0	45.1	17.2	16.2
763L _ 12 X 6	12	6	4.8	22	29.5	47.0	22.8	15.3
763L _ 12 X 8	12	8	6.4	22	30.2	47.8	22.8	16.2
763L _ 12 X 10	12	10	7.9	22	31.0	48.7	22.8	17.2
763L _ 16 X 10	16	10	7.9	24	31.8	49.5	24.4	17.2
763L _ 16 X 12	16	12	9.5	24	31.8	52.0	24.4	22.8
763L _ 18 X 12	18	12	9.5	27	33.3	53.5	24.4	22.8
763L _ 25 X 18	25	18	15.1	35	38.6	61.0	31.3	24.4
763L _ 25 X 20	25	20	15.9	35	39.9	62.3	31.3	26.0
763L _ 38 X 20	*38	20	15.9	55	49.8	87.5	49.4	26.0
763L _ 38 X 25	*38	25	21.8	55	55.5	95.4	49.4	31.3

TUBE (METRIC) TO TUBE (INCH)

Ordering Information	A Tube O.D.	A1 Tube O.D.	D	W Hex. Flat	N	L	I	I1
	mm	inch	mm	mm	mm	mm	mm	mm
763L _ 2 X 1/4	2	1/4	1.7	14	24.0	38.6	12.9	15.2
763L _ 3 X 1/8	3	1/8	2.4	12	22.1	35.2	12.9	12.7
763L _ 4 X 1/8	4	1/8	2.4	12	23.4	36.5	13.7	12.7
763L _ 4 X 1/4	4	1/4	2.4	14	25.4	39.4	13.7	15.2
763L _ 6 X 1/8	6	1/8	2.4	14	24.6	38.5	15.3	12.7
763L _ 6 X 1/4	6	1/4	4.8	14	26.2	41.0	15.3	15.2
763L _ 6 X 5/16	6	5/16	4.8	14	27.4	42.3	15.3	16.2
763L _ 8 X 1/8	8	1/8	2.4	15	25.7	39.8	16.2	12.7
763L _ 8 X 1/4	8	1/4	4.8	15	27.4	42.3	16.2	15.2
763L _ 8 X 3/8	8	3/8	6.4	16	29.5	44.3	16.2	16.8
763L _ 10 X 1/8	10	1/8	2.4	18	27.7	41.8	17.2	12.7
763L _ 10 X 1/4	10	1/4	4.8	18	29.5	44.5	17.2	15.2
763L _ 10 X 5/16	10	5/16	6.4	18	30.0	45.1	17.2	16.2
763L _ 10 X 3/8	10	3/8	7.1	18	31.0	45.9	17.2	16.8
763L _ 12 X 5/16	12	5/16	6.4	22	30.2	47.8	22.8	16.2
763L _ 12 X 3/8	12	3/8	7.1	22	31.0	48.4	22.8	16.8
763L _ 12 X 1/2	12	1/2	9.5	22	31.0	51.2	22.8	22.9
763L _ 15 X 1/2	15	1/2	10.3	24	31.8	52.0	24.4	22.9
763L _ 16 X 5/8	16	5/8	12.7	24	31.8	52.0	24.4	24.4
763L _ 18 X 3/4	18	3/4	15.1	27	33.3	53.5	24.4	24.4

* Including low friction paste, See page 89 "D" - Dimension is minimum opening. Dimensions are for reference only, and are subject to change without notice.

Cont'd next page

763 L

REDUCING UNION (Cont'd)

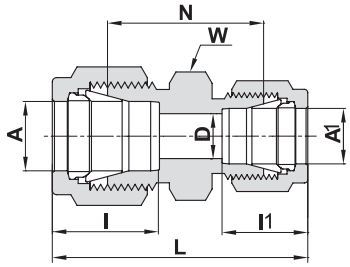

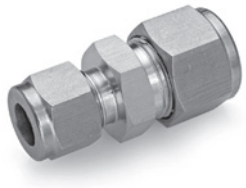

TUBE (INCH) TO TUBE (INCH)

Ordering Information	A Tube O.D.		A1 Tube O.D		D		W Hex. Flat	N		L		I		I1	
	inch	mm	inch	mm	inch	mm	inch	inch	mm	inch	mm	inch	mm	inch	mm
763L _ 1/8 X 1/16	1/8	3.17	1/16	1.58	.05	1.27	7/16	.81	20.57	1.22	30.98	.50	12.7	.34	8.6
763L _ 3/16 X 1/16	3/16	4.76	1/16	1.58	.05	1.27	7/16	.86	21.84	1.27	32.26	.54	13.7	.34	8.6
763L _ 3/16 X 1/8	3/16	4.76	1/8	3.17	.09	2.28	7/16	.92	23.36	1.44	36.57	.54	13.7	.50	12.7
763L _ 1/4 X 1/16	1/4	6.35	1/16	1.58	.05	1.27	1/2	.91	23.11	1.35	34.29	.60	15.2	.34	8.6
763L _ 1/4 X 1/8	1/4	6.35	1/8	3.17	.09	2.28	1/2	.97	24.63	1.52	38.60	.60	15.2	.50	12.7
763L _ 1/4 X 3/16	1/4	6.35	3/16	4.76	.12	3.04	1/2	1.00	25.40	1.55	37.37	.60	15.2	.54	13.7
763L _ 5/16 X 1/8	5/16	7.93	1/8	3.17	.09	2.28	9/16	1.01	25.65	1.56	39.62	.64	16.2	.50	12.7
763L _ 5/16 X 1/4	5/16	7.93	1/4	6.35	.19	4.82	9/16	1.08	27.43	1.66	42.16	.64	16.2	.60	15.2
763L _ 3/8 X 1/16	3/8	9.52	1/16	1.58	.05	1.27	5/8	1.00	25.40	1.44	36.58	.66	16.8	.34	8.6
763L _ 3/8 X 1/8	3/8	9.52	1/8	3.17	.09	2.28	5/8	1.06	26.92	1.61	40.89	.66	16.8	.50	12.7
763L _ 3/8 X 1/4	3/8	9.52	1/4	6.35	.19	4.82	5/8	1.12	28.44	1.70	43.18	.66	16.8	.60	15.2
763L _ 3/8 X 5/16	3/8	9.52	5/16	7.93	.25	6.35	5/8	1.16	29.46	1.74	44.19	.66	16.8	.64	16.2
763L _ 1/2 X 1/8	1/2	12.70	1/8	3.17	.09	2.28	13/16	1.12	28.44	1.78	45.21	.90	22.9	.50	12.7
763L _ 1/2 X 1/4	1/2	12.70	1/4	6.35	.19	4.82	13/16	1.16	29.46	1.85	46.99	.90	22.9	.60	15.2
763L _ 1/2 X 3/8	1/2	12.70	3/8	9.52	.28	7.11	13/16	1.22	30.98	1.91	48.51	.90	22.9	.66	16.8
763L _ 5/8 X 3/8	5/8	15.87	3/8	9.52	.28	7.11	15/16	1.25	31.75	1.94	49.27	.96	24.4	.66	16.8
763L _ 5/8 X 1/2	5/8	15.87	1/2	12.70	.41	10.41	15/16	1.25	31.75	2.05	52.07	.96	24.4	.90	22.9
763L _ 3/4 X 1/4	3/4	19.05	1/4	6.35	.19	4.82	1 1/16	1.25	31.75	1.94	49.28	.96	24.4	.60	15.2
763L _ 3/4 X 3/8	3/4	19.05	3/8	9.52	.28	7.11	1 1/16	1.31	33.27	2.00	50.80	.96	24.4	.66	16.8
763L _ 3/4 X 1/2	3/4	19.05	1/2	12.70	.41	10.41	1 1/16	1.31	33.27	2.11	53.59	.96	24.4	.90	22.9
763L _ 3/4 X 5/8	3/4	19.05	5/8	15.87	.50	12.70	1 1/16	1.31	33.27	2.11	53.59	.96	24.4	.96	24.4
763L _ 1 X 1/2	1	25.4	1/2	12.70	.41	10.41	1 3/8	1.50	38.10	2.38	60.45	1.23	31.2	.90	22.9
763L _ 1 X 3/4	1	25.4	3/4	19.05	.62	15.75	1 3/8	1.50	38.10	2.38	60.45	1.23	31.2	.96	24.4

764 L

UNION TEE

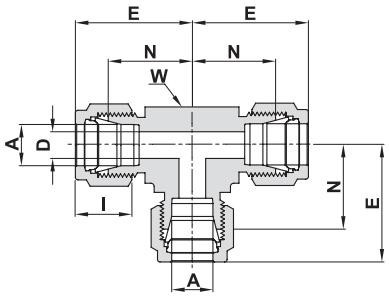

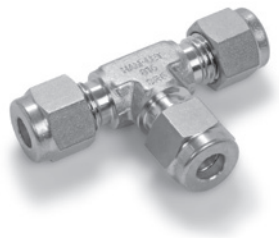

ALL TUBE (METRIC)

Ordering Information	A Tube O.D.	D	W Wrench Flat		N	E	I
	mm	mm	inch	mm	mm	mm	mm
764L _ 2	2	1.7	3/8	9.5	15.7	22.3	12.9
764L _ 3	3	2.4	3/8	9.5	15.7	22.3	12.9
764L _ 4	4	2.4	1/2	12.7	18.8	25.4	13.7
764L _ 6	6	4.8	1/2	12.7	19.6	27.0	15.3
764L _ 8	8	6.4	5/8	15.9	22.4	29.9	16.2
764L _ 10	10	7.9	11/16	17.5	23.9	31.5	17.2
764L _ 12	12	9.5	13/16	20.6	25.9	36.0	22.8
764L _ 14	14	11.1	15/16	23.8	28.7	38.8	24.4
764L _ 15	15	11.9	15/16	23.8	28.7	38.8	24.4
764L _ 16	16	12.7	15/16	23.8	28.7	38.8	24.4
764L _ 18	18	15.1	1 1/8	28.6	29.7	39.8	24.4
764L _ 20	20	15.9	1 3/8	34.9	34.5	44.6	26.0
764L _ 22	22	18.3	1 3/8	34.9	34.5	44.6	26.0
764L _ 25	25	21.8	1 3/8	34.9	36.8	49.1	31.3
764L _ 38	*38	33.7	-	55.0	56.4	84.0	49.4
764L _ 50	*50	45.2	2 3/4	69.9	68.9	106.0	65.0

ALL TUBE (INCH)

Ordering Information	A Tube O.D.		D		W Wrench Flat		N		E		I	
	inch	mm	inch	mm	inch	mm	inch	mm	inch	mm	inch	mm
764L _ 1/16	1/16	1.58	.05	1.27	3/8	9.5	.55	14.00	.70	17.80	.34	8.6
764L _ 1/8	1/8	3.17	.09	2.28	3/8	9.5	.62	15.74	.88	22.35	.50	12.7
764L _ 3/16	3/16	4.76	.12	3.04	1/2	12.7	.70	17.80	.96	24.40	.54	13.7
764L _ 1/4	1/4	6.35	.19	4.82	1/2	12.7	.77	19.55	1.06	26.90	.60	15.2
764L _ 5/16	5/16	7.93	.25	6.35	5/8	15.9	.88	22.35	1.17	29.71	.64	16.2
764L _ 3/8	3/8	9.52	.28	7.11	5/8	15.9	.91	23.11	1.20	30.48	.66	16.8
764L _ 1/2	1/2	12.70	.41	10.41	13/16	20.6	1.02	25.90	1.42	36.06	.90	22.9
764L _ 5/8	5/8	15.87	.50	12.70	15/16	23.8	1.13	28.70	1.53	38.90	.96	24.4
764L _ 3/4	3/4	19.05	.62	15.74	1 1/8	28.6	1.17	29.70	1.57	39.90	.96	24.4
764L _ 7/8	7/8	22.22	.72	18.29	1 3/8	34.9	1.36	34.54	1.76	44.70	1.02	25.9
764L _ 1	1	25.40	.88	22.35	1 3/8	34.9	1.45	36.83	1.93	49.00	1.23	31.2
764L _ 1 1/4	*1 1/4	31.75	1.09	27.7	1 11/16	42.9	1.75	44.50	2.62	66.55	1.62	41.2
764L _ 1 1/2	*1 1/2	38.10	1.34	34.0	2	50.8	2.00	50.80	3.07	77.98	1.97	50.0
764L _ 2	*2	50.80	1.81	45.97	2 3/4	69.9	2.75	69.85	4.22	107.19	2.66	67.6

* Including low friction paste, See page 89

"**D**" - Dimension is minimum opening. Dimensions are for reference only, and are subject to change without notice.

764 LR

REDUCING TEE

HOW TO ORDER

	A		A		A1
764LR	3/8	X	3/8	X	1/4

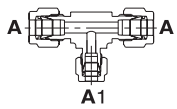

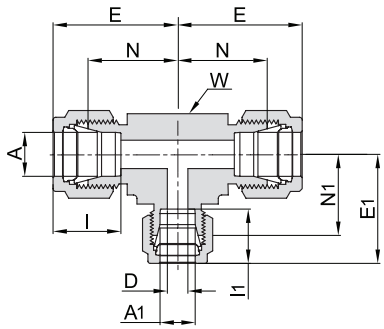

ALL TUBE (METRIC)

Ordering Information	A Tube O.D.	A1 Tube O.D.	E	E1	I	I1	D	W Wrench Flat		N	N1
	mm	mm	mm	mm	mm	mm	mm	inch	mm	mm	mm
764LR_8MMX8MMX6MM	8	6	29.9	29.8	16.2	15.3	4.8	5/8	15.9	22.4	22.4
764LR_10MMX10MMX6MM	10	6	31.5	31.3	17.2	15.3	4.8	11/16	17.5	23.9	23.9
764LR_12MMX12MMX6MM	12	6	36.0	31.8	22.8	15.3	4.8	13/16	20.6	25.9	24.4
764LR_12MMX12MMX10MM	12	10	36.0	33.5	22.8	17.2	7.9	13/16	20.6	25.9	25.9
764LR_14MMX14MMX10MM	14	10	38.8	36.3	24.4	17.2	7.9	15/16	23.8	28.7	28.7
764LR_18MMX18MMX12MM	18	12	39.8	39.8	24.4	22.8	9.5	1 1/8	28.6	29.7	29.7
764LR_50MMX50MMX38MM	*50	*38	106.0	96.2	65.0	49.4	33.7	2 3/4	69.9	68.9	68.6

ALL TUBE (INCH)

Ordering Information	A Tube O.D.		A1 Tube O.D		E		E1		I		I1		D		W Wrench Flat		N		N1	
	inch	mm	inch	mm	inch	mm	inch	mm	inch	mm	inch	mm	inch	mm	inch	mm	inch	mm	inch	mm
764LR_1/4 X 1/4 X 1/8	1/4	6.35	1/8	3.17	1.06	26.9	1.03	26.2	.60	15.2	.50	12.7	.09	2.28	1/2	12.7	.77	19.6	.77	19.6
764LR_3/8 X 3/8 X 1/4	3/8	9.52	1/4	6.35	1.20	30.5	1.14	29.0	.66	16.8	.60	15.2	.19	4.82	5/8	15.9	.91	23.1	.85	21.6
764LR_1/2 X 1/2 X 1/4	1/2	12.70	1/4	6.35	1.42	36.1	1.25	31.8	.90	22.9	.60	15.2	.19	4.82	13/16	20.6	1.02	25.9	.96	24.4
764LR_1/2 X 1/2 X 3/8	1/2	12.70	3/8	9.52	1.42	36.1	1.31	33.3	.90	22.9	.66	16.8	.28	7.11	13/16	20.6	1.02	25.9	1.02	25.9
764LR_5/8 X 5/8 X 3/8	5/8	15.88	3/8	9.52	1.53	38.9	1.42	36.1	.96	24.4	.66	16.8	.28	7.11	15/16	23.8	1.13	28.7	1.13	28.7
764LR_3/4 X 3/4 X 1/4	3/4	19.05	1/4	6.35	1.57	39.9	1.46	37.1	.96	24.4	.60	15.2	.19	4.82	1 1/8	28.6	1.17	29.7	1.17	29.7
764LR_3/4 X 3/4 X 3/8	3/4	19.05	3/8	9.52	1.57	39.9	1.46	37.1	.96	24.4	.66	16.8	.28	7.11	1 1/8	28.6	1.17	29.7	1.17	29.7
764LR_3/4 X 3/4 X 1/2	3/4	19.05	1/2	12.70	1.57	39.9	1.57	39.9	.96	24.4	.90	22.9	.41	10.41	1 1/8	28.6	1.17	29.7	1.17	29.7
764LR_1 X 1 X 3/8	1	25.4	3/8	9.52	1.93	49.0	1.65	41.9	1.23	31.2	.66	16.8	.28	7.11	1 3/8	34.9	1.45	36.8	1.36	34.5
764LR_1 X 1 X 1/2	1	25.4	1/2	12.70	1.93	49.0	1.76	44.7	1.23	31.2	.90	22.9	.41	10.41	1 3/8	34.9	1.45	36.8	1.36	34.5
764LR_1 X 1 X 3/4	1	25.4	3/4	19.05	1.93	49.0	1.76	44.7	1.23	31.2	0.96	24.4	.62	15.75	1 3/8	34.9	1.45	36.8	1.36	34.5
764LR_1 1/4 X 1 1/4 X 1	*1 1/4	31.75	1	25.40	2.67	67.8	2.17	55.1	1.62	41.2	1.23	31.2	.88	22.35	1 11/16	42.9	1.75	44.5	1.69	42.9
764LR_1 1/2 X 1 1/2 X 1	*1 1/2	38.10	1	25.40	3.10	78.7	2.36	59.9	1.97	50.0	1.23	31.2	.88	22.35	2	50.8	2.00	50.8	1.88	47.8

* Including low friction paste, See page 89

"**D**" - Dimension is minimum opening. Dimensions are for reference only, and are subject to change without notice.

Cont'd next page

764 LR

REDUCING TEE

(Cont'd)

HOW TO ORDER

	A		A1		A
764LR	3/8	X	1/4	X	3/8

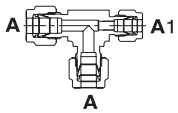

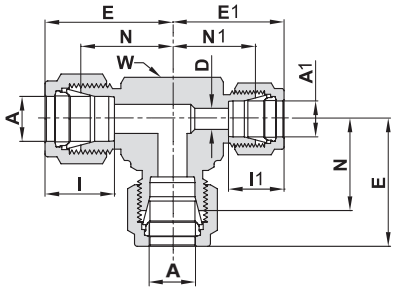

ALL TUBE (INCH)

Ordering Information	A Tube O.D.		A1 Tube O.D		E		E1		I		I1		D		W Wrench Flat		N		N1	
	inch	mm	inch	mm	inch	mm	inch	mm	inch	mm	inch	mm	inch	mm	inch	mm	inch	mm	inch	mm
764LR _ 1/4 X 1/8 X 1/4	1/4	6.35	1/8	3.17	1.06	26.9	1.03	26.2	.60	15.2	.50	12.7	.09	2.28	1/2	12.7	.77	19.6	.77	19.6
764LR _ 3/8 X 1/4 X 3/8	3/8	9.25	1/4	6.35	1.20	30.5	1.14	29.0	.66	16.8	.60	15.2	.19	4.82	5/8	15.9	.91	23.1	.85	21.6
764LR _ 1/2 X 1/4 X 1/2	1/2	12.7	1/4	6.35	1.42	36.1	1.31	33.3	.90	22.9	.60	15.2	.19	4.82	13/16	20.6	1.02	25.9	1.02	25.9
764LR _1/2 X 3/8 X 1/2	1/2	12.7	3/8	9.52	1.42	36.1	1.31	33.3	.90	22.9	.66	16.8	.28	7.11	13/16	20.6	1.02	25.9	1.02	25.9
764LR _ 3/4 X 3/8 X 3/4	3/4	19.05	3/8	9.52	1.57	39.9	1.46	37.1	.96	24.4	.66	16.8	.28	7.11	1 1/8	28.6	1.17	29.7	1.17	29.7

HOW TO ORDER

	A		A1		A1
764LR	1/2	X	3/8	X	3/8

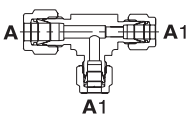

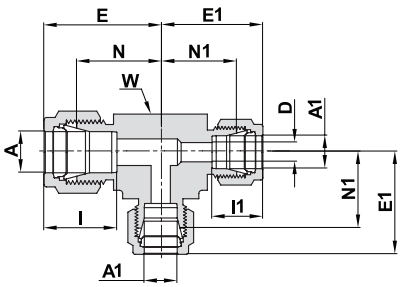

ALL TUBE (INCH)

Ordering Information	A Tube O.D.		A1 Tube O.D		E		E1		I		I1		D		W Wrench Flat		N		N1	
	inch	mm	inch	mm	inch	mm	inch	mm	inch	mm	inch	mm	inch	mm	inch	mm	inch	mm	inch	mm
764LR_1/2 X 3/8 X 3/8	1/2	12.70	3/8	9.52	1.42	36.1	1.31	33.3	.90	22.9	.66	16.8	.28	7.1	13/16	20.6	1.02	25.9	1.02	25.9
764LR_5/8 X 3/8 X 3/8	5/8	15.87	3/8	9.52	1.53	38.9	1.42	36.1	.96	24.4	.66	16.8	.28	7.1	15/16	23.8	1.13	28.7	1.13	28.7
764LR_3/4 X 3/8 X 3/8	3/4	19.05	3/8	9.52	1.57	39.9	1.46	37.1	.96	24.4	.66	16.8	.28	7.1	1 1/8	28.6	1.17	29.7	1.17	29.7

HOW TO ORDER

	A		A1		A2
764LR	5/8	X	1/2	X	3/8

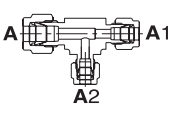

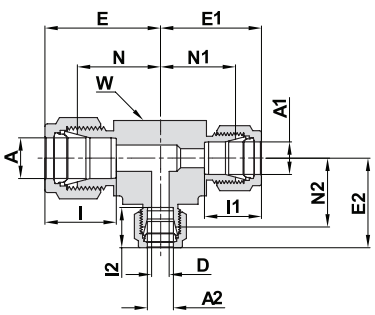

ALL TUBE (INCH)

Ordering Information	A Tube O.D.		A1 Tube O.D		A2 Tube O.D		E		E1		E2		I		I1		I2		D		W Wrench Flat		N		N1&N2	
	inch	mm	inch	mm	inch	mm	inch	mm	inch	mm	inch	mm	inch	mm	inch	mm	inch	mm	inch	mm	inch	mm	inch	mm	inch	mm
764LR_5/8 X 1/2 X 3/8	5/8	15.87	1/2	12.70	3/8	9.52	1.53	38.9	1.53	38.9	1.42	36.1	.96	24.4	.90	22.9	.66	16.8	.28	7.11	15/16	23.8	1.13	28.7	1.13	28.7
764LR_3/4 X 1/2 X 3/8	3/4	19.05	1/2	12.70	3/8	9.52	1.57	39.9	1.57	39.9	1.46	37.1	.96	24.4	.90	22.9	.66	16.8	.28	7.11	1 1/8	28.6	1.17	29.7	1.17	29.7
764LR_1 X 3/4 X 3/8	1	25.40	3/4	19.05	3/8	9.52	1.93	49.0	1.76	44.7	1.65	41.9	1.23	31.2	.96	24.4	.66	16.8	.28	7.11	1 3/8	34.9	1.45	36.8	1.36	34.5

"**D**" - Dimension is minimum opening. Dimensions are for reference only, and are subject to change without notice.

765 L

UNION ELBOW

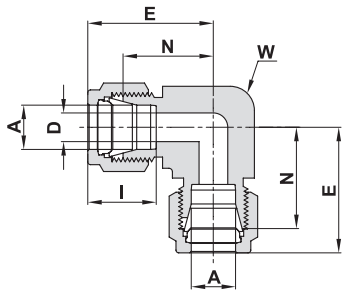

TUBE (METRIC) TO TUBE (METRIC)

Ordering Information	A Tube O.D.	D	W Wrench Flat		N	E	I
	mm	mm	inch	mm	mm	mm	mm
765L _ 3	3	2.4	3/8	9.5	15.7	22.3	12.9
765L _ 4	4	2.4	1/2	12.7	18.8	25.4	13.7
765L _ 6	6	4.8	1/2	12.7	19.6	27.0	15.3
765L _ 8	8	6.4	9/16	14.3	21.3	28.8	16.2
765L _ 10	10	7.9	11/16	17.5	23.9	31.5	17.2
765L _ 12	12	9.5	13/16	20.6	25.9	36.0	22.8
765L _ 14	14	11.1	15/16	23.8	27.9	38.0	24.4
765L _ 15	15	11.9	15/16	23.8	27.9	38.0	24.4
765L _ 16	16	12.7	15/16	23.8	27.9	38.0	24.4
765L _ 18	18	15.1	1 1/16	27.0	29.7	39.8	24.4
765L _ 20	20	15.9	1 3/8	34.9	34.5	44.6	26.0
765L _ 22	22	18.3	1 3/8	34.9	34.5	44.6	26.0
765L _ 25	25	21.8	1 3/8	34.9	36.8	49.1	31.3
765L _ 38	*38	33.7	-	55.0	56.4	84.0	49.4
765L _ 50	*50	45.2	2 3/4	69.9	68.9	106.0	65.0

TUBE (INCH) TO TUBE (INCH)

Ordering Information	A Tube O.D.		D		W Wrench Flat		N		E		I	
	inch	mm	inch	mm	inch	mm	inch	mm	inch	mm	inch	mm
765L _ 1/16	1/16	1.58	.05	1.27	3/8	9.5	.55	14.00	.70	17.80	.34	.86
765L _ 1/8	1/8	3.17	.09	2.28	3/8	9.5	.62	15.74	.88	22.35	.50	12.7
765L _ 3/16	3/16	4.76	.12	3.04	1/2	12.7	.74	18.80	1.00	25.40	.54	13.7
765L _ 1/4	1/4	6.35	.19	4.82	1/2	12.7	.77	19.55	1.06	26.92	.60	15.2
765L _ 5/16	5/16	7.93	.25	6.35	9/16	14.3	.84	21.33	1.13	28.70	.64	16.2
765L _ 3/8	3/8	9.52	.28	7.11	5/8	15.9	.91	23.11	1.20	30.48	.66	16.8
765L _ 1/2	1/2	12.70	.41	10.41	13/16	20.6	1.02	25.90	1.42	36.06	.90	22.9
765L _ 5/8	5/8	15.87	.50	12.70	15/16	23.8	1.10	27.94	1.50	38.10	.96	24.4
765L _ 3/4	3/4	19.05	.62	15.74	1 1/16	27.0	1.17	29.70	1.57	39.90	.96	24.4
765L _ 7/8	7/8	22.22	.72	18.29	1 3/8	34.9	1.36	34.54	1.76	44.70	1.02	25.9
765L _ 1	1	25.40	.88	22.35	1 3/8	34.9	1.45	36.83	1.93	49.00	1.23	31.2
765L _ 1 1/4	*1 1/4	31.75	1.09	27.70	1 11/16	42.9	1.75	44.50	2.62	66.55	1.62	41.2
765L _ 1 1/2	*1 1/2	38.10	1.34	34.00	2	50.8	2.00	50.80	3.07	77.98	1.97	50.0
765L _ 2	*2	50.80	1.81	45.97	2 3/4	69.9	2.75	69.85	4.22	107.19	2.66	67.6

* Including low friction paste, See page 89

"**D**" - Dimension is minimum opening. Dimensions are for reference only, and are subject to change without notice.

765 LR

REDUCING UNION ELBOW

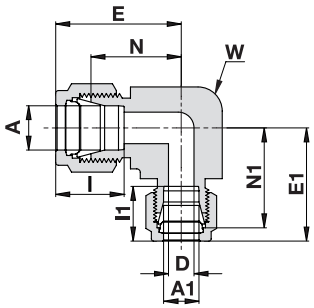

TUBE (METRIC) TO TUBE (INCH)

Ordering Information	A Tube O.D.	A1 Tube O.D	E	E1	I	I1	D	W Wrench Flat		N	N1
	mm	inch	mm	mm	mm	mm	mm	in	mm	mm	mm
765LR _ 6 X 1/4	6	1/4	27.0	26.9	15.3	15.2	4.8	1/2	12.7	19.6	19.6
765LR _ 8 X 1/4	8	1/4	28.8	28.7	16.2	15.2	4.8	9/16	14.3	21.3	21.3

TUBE (INCH) TO TUBE (INCH)

Ordering Information	A Tube O.D.		A1 Tube O.D		E		E1		I		I1		D		W Wrench Flat		N		N1	
	in	mm	in	mm	in	mm	in	mm	in	mm	in	mm	in	mm	in	mm	in	mm	in	mm
765LR _ 3/8 X 1/4	3/8	9.52	1/4	6.35	1.20	30.48	1.20	30.48	.66	16.8	.60	15.2	.19	4.82	5/8	15.9	.91	23.11	.91	23.11
765LR _ 5/8 X 3/8	5/8	15.87	3/8	9.52	1.50	38.10	1.39	35.31	.96	24.4	.66	16.8	.28	7.11	15/16	23.8	1.10	27.94	1.10	27.94

"**D**" - Dimension is minimum opening. Dimensions are for reference only, and are subject to change without notice.

766 L

FEMALE CONNECTOR

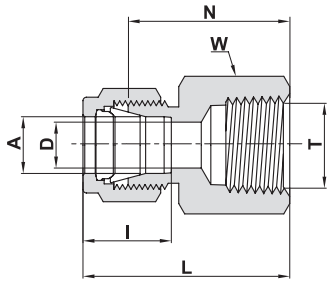

TUBE (METRIC) TO FEMALE NPT THREAD

Ordering Information	A Tube O.D.	T (NPT)	D	W Hex. Flat	N	L	I
	mm	inch	mm	mm	mm	mm	mm
766L _ 3 X 1/8	3	1/8	2.4	14	22.1	28.7	12.9
766L _ 3 X 1/4	3	1/4	2.4	19	26.9	33.5	12.9
766L _ 4 X 1/8	4	1/8	2.4	14	23.1	29.7	13.7
766L _ 6 X 1/8	6	1/8	4.8	14	23.9	31.3	15.3
766L _ 6 X 1/4	6	1/4	4.8	19	28.4	35.8	15.3
766L _ 6 X 3/8	6	3/8	4.8	22	30.2	37.6	15.3
766L _ 6 X 1/2	6	1/2	4.8	27	35.1	42.5	15.3
766L _ 8 X 1/8	8	1/8	6.4	15	24.6	32.1	16.2
766L _ 8 X 1/4	8	1/4	6.4	19	29.5	37.0	16.2
766L _ 8 X 3/8	8	3/8	6.4	22	31.0	38.5	16.2
766L _ 8 X 1/2	8	1/2	6.4	27	35.8	43.3	16.2
766L _ 10 X 1/4	10	1/4	7.9	19	30.2	37.8	17.2
766L _ 10 X 3/8	10	3/8	7.9	22	31.8	39.4	17.2
766L _ 10 X 1/2	10	1/2	7.9	27	36.6	44.2	17.2
766L _ 12 X 1/4	12	1/4	9.5	22	30.2	40.3	22.8
766L _ 12 X 3/8	12	3/8	9.5	22	31.8	41.9	22.8
766L _ 12 X 1/2	12	1/2	9.5	27	36.6	46.7	22.8
766L _ 15 X 1/2	15	1/2	11.9	27	36.6	46.7	24.4
766L _ 16 X 1/2	16	1/2	12.7	27	36.8	46.9	24.4
766L _ 20 X 1/2	20	1/2	15.9	30	37.8	47.9	26.0
766L _ 20 X 3/4	20	3/4	15.9	35	39.6	49.7	26.0
766L _ 22 X 3/4	22	3/4	18.3	35	39.6	49.7	26.0
766L _ 22 X 1	22	1	18.3	41	47.8	57.9	26.0
766L _ 25 X 3/4	25	3/4	21.8	35	41.1	53.4	31.3
766L _ 25 X 1	25	1	21.8	41	50.0	62.3	31.3

"**D**" - Dimension is minimum opening. Dimensions are for reference only, and are subject to change without notice.

Cont'd next page

766 L

FEMALE CONNECTOR

(Cont'd)

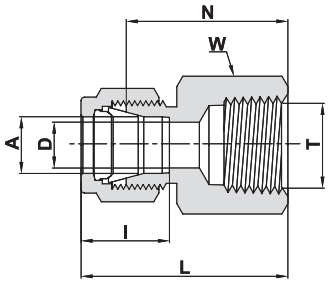

TUBE (INCH) TO FEMALE NPT THREAD

Ordering Information	A Tube O.D.		T (NPT)	D		W Hex Flat	N		L		I	
	inch	mm	inch	inch	mm	inch	inch	mm	inch	mm	inch	mm
766L _ 1/16 X1/16	1/16	1.58	1/16	.05	1.27	7/16	.78	19.81	.93	23.62	.34	8.6
766L _ 1/16 X 1/8	1/16	1.58	1/8	.05	1.27	9/16	.81	20.57	.96	24.38	.34	8.6
766L _ 1/8 X 1/8	1/8	3.17	1/8	.09	2.28	9/16	.87	22.10	1.13	28.70	.50	12.7
766L _ 1/8 X 1/4	1/8	3.17	1/4	.09	2.28	3/4	1.06	26.92	1.32	33.52	.50	12.7
766L _ 3/16 X 1/8	3/16	4.76	1/8	.12	3.04	9/16	.91	23.11	1.17	29.71	.54	13.7
766L _ 1/4 X 1/8	1/4	6.35	1/8	.19	4.82	9/16	.94	23.87	1.23	31.24	.60	15.2
766L _ 1/4 X 1/4	1/4	6.35	1/4	.19	4.82	3/4	1.12	28.44	1.41	35.81	.60	15.2
766L _ 1/4 X 3/8	1/4	6.35	3/8	.19	4.82	7/8	1.19	30.22	1.48	37.59	.60	15.2
766L _ 1/4 X 1/2	1/4	6.35	1/2	.19	4.82	1 1/16	1.38	35.00	1.67	42.42	.60	15.2
766L _ 5/16 X 1/8	5/16	7.93	1/8	.25	6.35	9/16	.97	24.63	1.26	32.00	.64	16.2
766L _ 5/16 X 1/4	5/16	7.93	1/4	.25	6.35	3/4	1.16	29.46	1.45	36.83	.64	16.2
766L _ 3/8 X 1/8	3/8	9.52	1/8	.28	7.11	5/8	1.00	25.40	1.29	32.76	.66	16.8
766L _ 3/8 X 1/4	3/8	9.52	1/4	.28	7.11	3/4	1.19	30.22	1.48	37.59	.66	16.8
766L _ 3/8 X 3/8	3/8	9.52	3/8	.28	7.11	7/8	1.25	31.75	1.54	39.11	.66	16.8
766L _ 3/8 X 1/2	3/8	9.52	1/2	.28	7.11	1 1/16	1.44	36.57	1.73	43.94	.66	16.8
766L _ 3/8 X 3/4	3/8	9.52	3/4	.28	7.11	1 5/16	1.59	40.40	1.88	47.75	.66	16.8
766L _ 1/2 X 1/4	1/2	12.70	1/4	.41	10.41	13/16	1.19	30.22	1.59	40.38	.90	22.9
766L _ 1/2 X 3/8	1/2	12.70	3/8	.41	10.41	7/8	1.25	31.75	1.65	41.91	.90	22.9
766L _ 1/2 X 1/2	1/2	12.70	1/2	.41	10.41	1 1/16	1.44	36.57	1.84	46.73	.90	22.9
766L _ 1/2 X 3/4	1/2	12.70	3/4	.41	10.41	1 5/16	1.50	38.10	1.90	48.26	.90	22.9
766L _ 5/8 X 3/8	5/8	15.87	3/8	.50	12.70	15/16	1.25	31.75	1.65	41.91	.96	24.4
766L _ 5/8 X 1/2	5/8	15.87	1/2	.50	12.70	1 1/16	1.44	36.57	1.84	46.73	.96	24.4
766L _ 5/8 X 3/4	5/8	15.87	3/4	.50	12.70	1 5/16	1.50	38.10	1.90	48.26	.96	24.4
766L _ 3/4 X 1/2	3/4	19.05	1/2	.62	15.75	1 1/16	1.44	36.57	1.84	46.73	.96	24.4
766L _ 3/4 X 3/4	3/4	19.05	3/4	.62	15.75	1 5/16	1.50	38.10	1.90	48.26	.96	24.4
766L _ 7/8 X 3/4	7/8	22.22	3/4	.72	18.28	1 5/16	1.56	39.62	1.96	49.78	1.02	25.9
766L _ 1 X 3/4	1	25.40	3/4	.88	22.35	1 3/8	1.62	41.14	2.10	53.34	1.23	31.2
766L _ 1 X 1	1	25.40	1	.88	22.35	1 5/8	1.97	50.03	2.45	62.23	1.23	31.2
766L _ 1 1/4 X 1 1/4	*1 1/4	31.75	1 1/4	1.09	27.70	2 1/4	2.07	52.59	2.94	74.68	1.62	41.2
766L _ 1 1/2 X 1 1/2	*1 1/2	38.10	1 1/2	1.34	34.00	2 3/8	2.21	56.13	3.28	83.31	1.97	50.0
766L _ 2 X 2	*2	50.80	2	1.81	45.97	2 7/8	2.53	64.26	4.00	101.60	2.66	67.6

* Including low friction paste, See page 89

"**D**" - Dimension is minimum opening. Dimensions are for reference only, and are subject to change without notice.

766 LR

FEMALE CONNECTOR

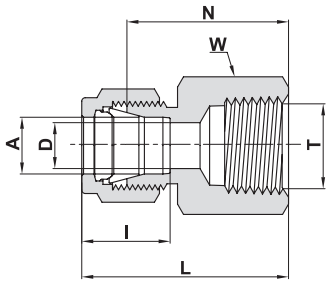

TUBE (METRIC) TO FEMALE ISO TAPERED THREAD

Ordering Information	A Tube O.D.	T (ISO)	D	W Hex. Flat	N	L	I
	mm	inch	mm	mm	mm	mm	mm
766LR _ 3 X 1/8	3	R-1/8	2.4	14	22.1	28.7	12.9
766LR _ 6 X 1/8	6	R-1/8	4.8	14	23.9	31.3	15.3
766LR _ 6 X 1/4	6	R-1/4	4.8	19	28.4	35.8	15.3
766LR _ 6 X 3/8	6	R-3/8	4.8	22	30.2	37.6	15.3
766LR _ 6 X 1/2	6	R-1/2	4.8	27	35.1	42.5	15.3
766LR _ 8 X 1/8	8	R-1/8	6.4	15	24.6	32.1	16.2
766LR _ 8 X 1/4	8	R-1/4	6.4	19	29.5	37.0	16.2
766LR _ 8 X 3/8	8	R-3/8	6.4	22	31.0	38.5	16.2
766LR _ 8 X 1/2	8	R-1/2	6.4	27	35.8	43.3	16.2
766LR _ 10 X 1/8	10	R-1/8	7.9	18	25.4	33.0	17.2
766LR _ 10 X 1/4	10	R-1/4	7.9	19	30.2	37.8	17.2
766LR _ 10 X 3/8	10	R-3/8	7.9	22	31.8	39.4	17.2
766LR _ 10 X 1/2	10	R-1/2	7.9	27	36.6	44.2	17.2
766LR _ 12 X 1/8	12	R-1/8	8.3	22	25.4	35.5	22.8
766LR _ 12 X 1/4	12	R-1/4	9.5	22	30.2	40.3	22.8
766LR _ 12 X 3/8	12	R-3/8	9.5	22	31.8	41.9	22.8
766LR _ 12 X 1/2	12	R-1/2	9.5	27	36.6	46.7	22.8
766LR _ 12 X 3/4	12	R-3/4	9.5	35	38.9	49.0	22.8
766LR _ 15 X 3/8	15	R-3/8	11.9	24	31.8	41.9	24.4
766LR _ 15 X 1/2	15	R-1/2	11.9	27	36.6	46.7	24.4
766LR _ 20 X 1/2	20	R-1/2	15.9	30	37.8	47.9	26.0
766LR _ 20 X 3/4	20	R-3/4	15.9	35	39.6	49.7	26.0
766LR _ 22 X 3/4	22	R-3/4	18.3	35	39.6	49.7	26.0
766LR _ 22 X 1	22	R-1	18.3	41	47.8	57.9	26.0
766LR _ 25 X 3/4	25	R-3/4	21.8	35	41.1	53.4	31.3
766LR _ 25 X 1	25	R-1	21.8	41	50.0	62.3	31.3

Reference Specifications:

DIN -2999
BS -21
JIS -B0203
ISO -7/1-BSP-T

Designation:
Marking LR on Hex.

"**D**" - Dimension is minimum opening. Dimensions are for reference only, and are subject to change without notice.

Cont'd next page

766 LR

FEMALE CONNECTOR

(Cont'd)

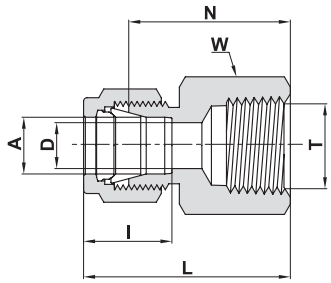

TUBE (INCH) TO FEMALE NPT THREAD

Ordering Information	A Tube O.D.		T (ISO)	D		W Hex Flat	N		L		I	
	inch	mm	inch	inch	mm	inch	inch	mm	inch	mm	inch	mm
766LR _ 1/16 X1/16	1/16	1.58	1/16	.05	1.27	7/16	.78	19.81	.93	23.62	.34	8.6
766LR _ 1/16 X 1/8	1/16	1.58	1/8	.05	1.27	9/16	.81	20.57	.96	24.38	.34	8.6
766LR _ 1/8 X 1/8	1/8	3.17	1/8	.09	2.28	9/16	.87	22.10	1.13	28.70	.50	12.7
766LR _ 1/8 X 1/4	1/8	3.17	1/4	.09	2.28	3/4	1.06	26.92	1.32	33.52	.50	12.7
766LR _ 3/16 X 1/8	3/16	4.76	1/8	.12	3.04	9/16	.91	23.11	1.17	29.71	.54	13.7
766LR _ 1/4 X 1/8	1/4	6.35	1/8	.19	4.82	9/16	.94	23.87	1.23	31.24	.60	15.2
766LR _ 1/4 X 1/4	1/4	6.35	1/4	.19	4.82	3/4	1.12	28.44	1.41	35.81	.60	15.2
766LR _ 1/4 X 3/8	1/4	6.35	3/8	.19	4.82	7/8	1.19	30.22	1.48	37.59	.60	15.2
766LR _ 1/4 X 1/2	1/4	6.35	1/2	.19	4.82	1 1/16	1.38	35.00	1.67	42.42	.60	15.2
766LR _ 5/16 X 1/4	5/16	7.93	1/4	.25	6.35	3/4	1.16	29.46	1.45	36.83	.64	16.2
766LR _ 3/8 X 1/8	3/8	9.52	1/8	.28	7.11	5/8	1.00	25.40	1.29	32.76	.66	16.8
766LR _ 3/8 X 1/4	3/8	9.52	1/4	.28	7.11	3/4	1.19	30.22	1.48	37.59	.66	16.8
766LR _ 3/8 X 3/8	3/8	9.52	3/8	.28	7.11	7/8	1.25	31.75	1.54	39.11	.66	16.8
766LR _ 3/8 X 1/2	3/8	9.52	1/2	.28	7.11	1 1/16	1.44	36.57	1.73	43.94	.66	16.8
766LR_ 1/2 X 1/4	1/2	12.70	1/4	.41	10.41	13/16	1.19	30.20	1.59	40.38	.90	22.9
766LR _ 1/2 X 3/8	1/2	12.70	3/8	.41	10.41	7/8	1.25	31.75	1.65	41.91	.90	22.9
766LR_ 1/2 X 1/2	1/2	12.70	1/2	.41	10.41	1 1/16	1.44	36.57	1.84	46.73	.90	22.9
766LR _ 5/8 X 1/2	5/8	15.87	1/2	.50	12.70	1 1/16	1.44	36.57	1.84	46.73	.96	24.4
766LR _ 3/4 X 1/2	3/4	19.05	1/2	.62	15.75	1 1/16	1.44	36.57	1.84	46.73	.96	24.4
766LR _ 3/4 X 3/4	3/4	19.05	3/4	.62	15.75	1 5/16	1.50	38.10	1.90	48.26	.96	24.4
766LR _ 1 X 3/4	1	25.40	3/4	.88	22.35	1 3/8	1.62	41.14	2.10	53.34	1.23	31.2
766LR _ 1 X 1	1	25.40	1	.88	22.35	1 5/8	1.97	50.03	2.45	62.23	1.23	31.2

Reference Specifications:

DIN -2999
BS -21
JIS -B0203
ISO -7/1-BSP-T

Designation:
Marking LR on Hex.

"**D**" - Dimension is minimum opening. Dimensions are for reference only, and are subject to change without notice.

766 LG

FEMALE CONNECTOR

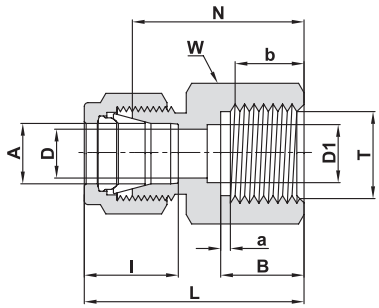

TUBE (METRIC) TO FEMALE ISO PARALLEL THREAD

Ordering Information	A Tube O.D.	T (ISO)	D	D1	W Hex. Flat	B	b Min	a Min	N	L	I
	mm	inch	mm	mm	mm	mm	mm	mm	mm	mm	mm
766LG _ 3 X 1/4	3	G-1/4	2.4	5.5	19	13.0	9.5	1.6	28.7	35.3	12.9
766LG _ 6 X 1/8	6	G-1/8	4.0	4.0	14	10.0	7.0	1.6	25.0	32.4	15.3
766LG _ 6 X 1/4	6	G-1/4	4.8	5.5	19	13.0	9.5	1.6	30.2	37.6	15.3
766LG _ 6 X 3/8	6	G-3/8	4.8	6.5	24	14.1	10.0	1.6	30.2	37.6	15.3
766LG _ 6 X 1/2	6	G-1/2	4.8	7.0	27	19.0	15.0	1.6	36.1	43.5	15.3
766LG _ 8 X 1/4	8	G-1/4	5.5	5.5	19	13.0	9.5	1.6	31.0	38.5	16.2
766LG _ 8 X 3/8	8	G-3/8	6.4	6.4	24	14.1	10.0	1.6	28.7	36.2	16.2
766LG _ 8 X 1/2	8	G-1/2	7.0	7.0	27	19.0	15.0	1.6	33.5	41.0	16.2
766LG _ 10 X 1/4	10	G-1/4	5.5	5.5	19	13.0	9.5	1.6	31.8	39.4	17.2
766LG _ 10 X 3/8	10	G-3/8	6.5	6.5	24	14.1	10.0	1.6	31.2	38.8	17.2
766LG _ 10 X 1/2	10	G-1/2	7.0	7.0	27	19.0	15.0	1.6	34.5	42.1	17.2
766LG _ 12 X 1/4	12	G-1/4	5.5	5.5	22	13.0	9.5	1.6	31.8	41.9	22.8
766LG _ 12 X 3/8	12	G-3/8	6.5	6.5	24	14.1	10.0	1.6	34.3	44.4	22.8
766LG _ 12 X 1/2	12	G-1/2	7.0	7.0	27	19.0	15.0	1.6	38.1	48.2	22.8
766LG _ 20 X 1/2	20	G-1/2	7.0	7.0	30	19.0	15.0	1.6	44.2	54.3	26.0
766LG _ 22 X 1/2	22	G-1/2	7.0	7.0	30	19.0	15.0	1.6	44.2	54.3	26.0

TUBE (INCH) TO FEMALE ISO PARALLEL THREAD

Ordering Information	A Tube O.D.		T (ISO)	D		D1		W Hex. Flat	B		b Min		a Min		N		L		I	
	inch	mm	inch	inch	mm	inch	mm	inch	inch	mm	inch	mm	inch	mm	inch	mm	inch	mm	inch	mm
766LG _ 1/8 X 1/4	1/8	3.17	G-1/4	.09	2.3	.22	5.5	3/4	.51	13.0	.37	9.5	.06	1.6	1.13	28.7	1.39	35.3	.50	12.7
766LG _ 1/4 X 1/8	1/4	6.35	G-1/8	.16	4.0	.16	4.0	9/16	.40	10.0	.28	7.0	.06	1.6	.98	25.0	1.27	32.4	.60	15.2
766LG _ 1/4 X 1/4	1/4	6.35	G-1/4	.19	4.8	.22	5.5	3/4	.51	13.0	.37	9.5	.06	1.6	1.19	30.2	1.48	37.6	.60	15.2
766LG _ 1/4 X 3/8	1/4	6.35	G-3/8	.19	4.8	.26	6.5	15/16	.56	14.1	.39	10.0	.06	1.6	1.19	30.2	1.48	37.6	.60	15.2
766LG _ 1/4 X 1/2	1/4	6.35	G-1/2	.19	4.8	.28	7.0	1 1/16	.74	19.0	.59	15.0	.06	1.6	1.42	36.1	1.71	43.4	.60	15.2
766LG _ 5/16 X 1/4	5/16	7.93	G-1/4	.22	5.5	.22	5.5	3/4	.51	13.0	.37	9.5	.06	1.6	1.22	31.0	1.51	38.4	.64	16.2
766LG _ 5/16 X 1/2	5/16	7.93	G-1/2	.28	7.0	.28	7.0	1 1/16	.74	19.0	.59	15.0	.06	1.6	1.32	33.5	1.61	40.9	.64	16.2
766LG _ 3/8 X 1/4	3/8	9.52	G-1/4	.22	5.5	.22	5.5	3/4	.51	13.0	.37	9.5	.06	1.6	1.25	31.8	1.54	39.1	.66	16.8
766LG _ 3/8 X 3/8	3/8	9.52	G-3/8	.26	6.6	.26	6.6	15/16	.56	14.1	.39	10.0	.06	1.6	1.23	31.2	1.52	38.6	.66	16.8
766LG _ 3/8 X 1/2	3/8	9.52	G-1/2	.28	7.0	.28	7.0	1 1/16	.74	19.0	.59	15.0	.06	1.6	1.36	34.5	1.65	41.9	.66	16.8
766LG _ 1/2 X 3/8	1/2	12.7	G-3/8	.26	6.5	.26	6.5	15/16	.56	14.1	.39	10.0	.06	1.6	1.35	34.3	1.75	44.5	.90	22.9
766LG _ 1/2 X 1/2	1/2	12.7	G-1/2	.28	7.0	.28	7.0	1 1/16	.74	19.0	.59	15.0	.06	1.6	1.50	38.1	1.90	48.2	.90	22.9

Reference Specifications:

DIN -ISO 228/1
BS -2779
JIS -B0202
ISO -228/1-BSP-P

Designation:
Marking LG on Hex.

"**D**" - Dimension is minimum opening. Dimensions are for reference only, and are subject to change without notice.

767 LT
REDUCER

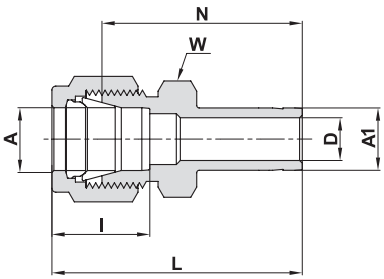

TUBE (METRIC) TO STUB (METRIC)							
Ordering Information	A Tube O.D.	A1 Tube O.D.	D	W Hex. Flat	N	L	I
	mm	mm	mm	mm	mm	mm	mm
767LT _ 2 X 3	2	3	1.7	12	26.9	33.5	12.9
767LT _ 3 X 4	3	4	2.4	12	28.4	35.0	12.9
767LT _ 3 X 6	3	6	2.4	12	29.5	36.1	12.9
767LT _ 3 X 10	3	10	2.4	14	31.8	38.4	12.9
767LT _ 4 X 6	4	6	2.4	12	30.5	37.1	13.7
767LT _ 6 X 3	6	3	2.1	14	29.5	36.9	15.3
767LT _ 6 X 8	6	8	4.8	14	32.5	39.9	15.3
767LT _ 6 X 10	6	10	4.8	14	33.3	40.7	15.3
767LT _ 6 X 12	6	12	4.8	14	38.9	46.3	15.3
767LT _ 6 X 18	6	18	4.8	22	42.2	49.6	15.3
767LT _ 8 X 6	8	6	4.0	15	32.8	40.3	16.2
767LT _ 8 X 10	8	10	6.4	15	34.5	42.0	16.2
767LT _ 8 X 12	8	12	6.4	15	40.1	47.6	16.2
767LT _ 10 X 6	10	6	4.0	18	34.8	42.4	17.2
767LT _ 10 X 8	10	8	5.6	18	35.8	43.4	17.2
767LT _ 10 X 12	10	12	7.9	18	42.2	49.8	17.2
767LT _ 10 X 15	10	15	7.9	18	43.7	51.3	17.2
767LT _ 10 X 18	10	18	7.9	22	43.7	51.3	17.2
767LT _ 12 X 6	12	6	4.0	22	34.8	44.9	22.8
767LT _ 12 X 8	12	8	5.6	22	35.8	45.9	22.8
767LT _ 12 X 10	12	10	7.1	22	36.6	46.7	22.8
767LT _ 12 X 16	12	16	9.5	22	43.7	53.8	22.8
767LT _ 12 X 18	12	18	9.5	22	43.7	53.8	22.8
767LT _ 12 X 20	12	20	9.5	22	46.0	56.1	22.8
767LT _ 12 X 22	12	22	9.5	24	46.0	56.1	22.8
767LT _ 12 X 25	12	25	9.5	27	52.3	62.4	22.8
767LT _ 16 X 12	16	12	8.8	24	42.9	53.0	24.4
767LT _ 18 X 12	18	12	8.8	27	44.5	54.6	24.4
767LT _ 18 X 16	18	16	12.7	27	46.0	56.1	24.4
767LT _ 18 X 20	18	20	15.1	27	47.5	57.6	24.4
767LT _ 18 X 22	18	22	15.1	27	47.5	57.6	24.4
767LT _ 18 X 25	18	25	15.1	27	52.3	62.4	24.4
767LT _ 20 X 16	20	16	12.7	30	47.8	57.9	26.0
767LT _ 20 X 18	20	18	13.9	30	47.8	57.9	26.0
767LT _ 20 X 22	20	22	15.9	30	49.3	59.4	26.0
767LT _ 20 X 25	20	25	15.9	30	54.1	64.2	26.0
767LT _ 22 X 18	22	18	13.9	30	47.8	57.9	26.0
767LT _ 22 X 20	22	20	15.1	30	49.3	59.4	26.0
767LT _ 22 X 25	22	25	18.3	30	54.1	64.2	26.0
767LT _ 25 X 18	25	18	13.9	35	50.8	63.1	31.3
767LT _ 25 X 20	25	20	15.1	35	52.3	64.6	31.3

"**D**" - Dimension is minimum opening. Dimensions are for reference only, and are subject to change without notice.

Cont'd next page

767 LT
REDUCER (cont'd)

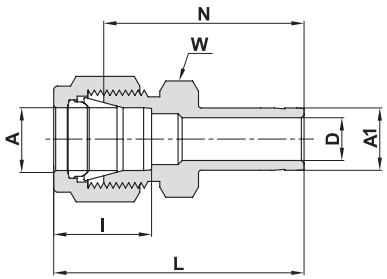

TUBE (METRIC) TO STUB (INCH)

Ordering Information	A Tube O.D.	A1 Tube O.D.	D	W Hex. Flat	N	L	I
	mm	inch	mm	mm	mm	mm	mm
767LT _ 2 X 1/8	2	1/8	1.7	12	26.9	33.5	12.9
767LT _ 3 X 1/8	3	1/8	2.2	12	26.9	33.5	12.9
767LT _ 3 X 1/4	3	1/4	2.4	12	29.5	36.1	12.9
767LT _ 4 X 1/4	4	1/4	2.4	12	30.5	37.1	13.7
767LT _ 6 X 1/8	6	1/8	2.2	14	29.5	36.9	15.3
767LT _ 6 X 5/16	6	5/16	4.8	14	32.5	39.9	15.3
767LT _ 6 X 3/8	6	3/8	4.8	14	33.3	40.7	15.3
767LT _ 6 X 1/2	6	1/2	4.8	14	38.9	46.3	15.3
767LT _ 8 X 3/8	8	3/8	6.4	15	34.5	42.0	16.2
767LT _ 8 X 1/2	8	1/2	6.4	15	40.1	47.6	16.2
767LT _ 10 X 3/8	10	3/8	6.8	18	36.6	44.2	17.2
767LT _ 10 X 1/2	10	1/2	7.9	18	42.2	49.8	17.2
767LT _ 12 X 1/2	12	1/2	9.4	22	42.2	52.3	22.8
767LT _ 12 X 3/4	12	3/4	9.4	22	43.7	53.8	22.8
767LT _ 18 X 3/4	18	3/4	15.0	27	46.0	56.1	24.4
767LT _ 18 X 1	18	1	15.1	27	52.3	62.4	24.4
767LT _ 25 X 1	25	1	20.3	35	57.2	69.5	31.3

HEAT EXCHANGER TEE; INFORMATION

UNION TEE – 764 L

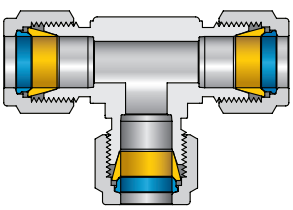

REDUCER – 767 LT

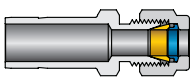

Heat exchanger tee made with Let-Lok tube fittings:

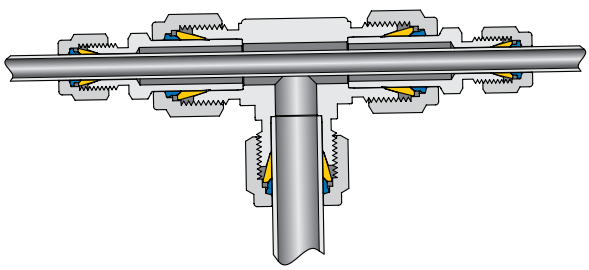

"**D**" - Dimension is minimum opening. Dimensions are for reference only, and are subject to change without notice.

Cont'd next page

767 LT
REDUCER (Cont'd)

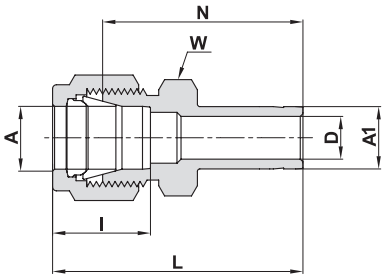

TUBE (INCH) TO STUB (INCH)

Ordering Information	A Tube O.D.		A1 Tube O.D.		D		W Hex Flat	N		L		I	
	inch	mm	inch	mm	inch	mm	inch	inch	mm	inch	mm	inch	mm
767LT _ 1/16 X 1/8	1/16	1.58	1/8	3.17	.05	1.27	5/16	1.00	25.40	1.15	29.21	.34	8.6
767LT _ 1/16 X 1/4	1/16	1.58	1/4	6.35	.05	1.27	5/16	1.09	27.68	1.24	31.50	.34	8.6
767LT _ 1/8 X 1/16	1/8	3.17	1/16	1.58	.03	.76	7/16	.88	22.35	1.14	28.96	.50	12.7
767LT _ 1/8 X 1/8	1/8	3.17	1/8	3.17	.08	2.03	7/16	1.06	26.92	1.32	33.52	.50	12.7
767LT _ 1/8 X 3/16	1/8	3.17	3/16	4.76	.09	2.28	7/16	1.09	27.68	1.35	34.29	.50	12.7
767LT _ 1/8 X 1/4	1/8	3.17	1/4	6.35	.09	2.28	7/16	1.16	29.46	1.42	36.06	.50	12.7
767LT _ 1/8 X 3/8	1/8	3.17	3/8	9.52	.09	2.28	7/16	1.22	30.98	1.48	37.59	.50	12.7
767LT _ 1/8 X 1/2	1/8	3.17	1/2	12.70	.09	2.28	9/16	1.48	37.59	1.74	44.20	.50	12.7
767LT _ 3/16 X 1/8	3/16	4.76	1/8	3.17	.08	2.03	7/16	1.11	28.19	1.37	34.80	.54	13.7
767LT _ 3/16 X 1/4	3/16	4.76	1/4	6.35	.12	3.04	7/16	1.20	30.48	1.46	37.08	.54	13.7
767LT _ 1/4 X 1/8	1/4	6.35	1/8	3.17	.08	2.03	1/2	1.16	29.46	1.45	36.83	.60	15.2
767LT _ 1/4 X 3/16	1/4	6.35	3/16	4.76	.12	3.04	1/2	1.19	30.22	1.48	37.59	.60	15.2
767LT _ 1/4 X 1/4	1/4	6.35	1/4	6.35	.17	4.20	1/2	1.25	31.75	1.54	39.11	.60	15.2
767LT _ 1/4 X 5/16	1/4	6.35	5/16	7.93	.19	4.82	1/2	1.28	32.51	1.57	39.87	.60	15.2
767LT _ 1/4 X 3/8	1/4	6.35	3/8	9.52	.19	4.82	1/2	1.31	33.27	1.60	40.64	.60	15.2
767LT _ 1/4 X 1/2	1/4	6.35	1/2	12.70	.19	4.82	9/16	1.53	38.86	1.82	46.22	.60	15.2
767LT _ 1/4 X 5/8	1/4	6.35	5/8	15.87	.19	4.82	11/16	1.60	40.64	1.89	48.00	.60	15.2
767LT _ 1/4 X 3/4	1/4	6.35	3/4	19.05	.19	4.82	13/16	1.59	40.39	1.88	47.75	.60	15.2
767LT _ 5/16 X 3/8	5/16	7.93	3/8	9.52	.25	6.35	9/16	1.36	34.54	1.65	41.91	.64	16.2
767LT _ 5/16 X 1/2	5/16	7.93	1/2	12.70	.25	6.35	9/16	1.58	40.13	1.87	47.49	.64	16.2
767LT _ 3/8 X 1/4	3/8	9.52	1/4	6.35	.17	4.20	5/8	1.34	34.03	1.63	41.40	.66	16.8
767LT _ 3/8 X 3/8	3/8	9.52	3/8	9.52	.27	6.85	5/8	1.41	35.81	1.70	43.18	.66	16.8
767LT _ 3/8 X 1/2	3/8	9.52	1/2	12.70	.28	7.11	5/8	1.62	41.14	1.91	48.51	.66	16.8
767LT _ 3/8 X 5/8	3/8	9.52	5/8	15.87	.28	7.11	11/16	1.69	42.92	1.98	50.29	.66	16.8
767LT _ 3/8 X 3/4	3/8	9.52	3/4	19.05	.28	7.11	13/16	1.69	42.92	1.98	50.29	.66	16.8
767LT _ 1/2 X 1/4	1/2	12.70	1/4	6.35	.17	4.20	13/16	1.37	34.80	1.77	44.96	.90	22.9
767LT _ 1/2 X 3/8	1/2	12.70	3/8	9.52	.27	6.85	13/16	1.44	36.58	1.84	46.74	.90	22.9
767LT _ 1/2 X 1/2	1/2	12.70	1/2	12.70	.37	9.40	13/16	1.66	42.16	2.06	52.32	.90	22.9
767LT _ 1/2 X 5/8	1/2	12.70	5/8	15.87	.41	10.41	13/16	1.72	43.68	2.12	53.84	.90	22.9
767LT _ 1/2 X 3/4	1/2	12.70	3/4	19.05	.41	10.41	13/16	1.72	43.68	2.12	53.84	.90	22.9
767LT _ 1/2 X 1	1/2	12.70	1	25.40	.41	10.41	1 1/16	1.97	50.03	2.37	60.19	.90	22.9
767LT _ 5/8 X 3/4	5/8	15.87	3/4	19.05	.50	12.70	15/16	1.75	44.45	2.15	54.61	.96	24.4
767LT _ 5/8 X 7/8	5/8	15.87	7/8	22.22	.50	12.70	15/16	1.81	45.97	2.21	56.13	.96	24.4
767LT _ 5/8 X 1	5/8	15.87	1	25.40	.50	12.70	1 1/16	2.00	50.80	2.40	60.96	.96	24.4
767LT _ 3/4 X 1/2	3/4	19.05	1/2	12.70	.37	9.40	1 1/16	1.75	44.45	2.15	54.61	.96	24.4
767LT _ 3/4 X 1	3/4	19.05	1	25.40	.62	15.75	1 1/16	2.06	52.32	2.46	62.48	.96	24.4
767LT _ 1 X 1 1/4	1	25.40	*1 1/4	31.75	.88	22.35	1 3/8	2.69	68.33	3.17	80.52	1.23	31.2
767LT _ 1 X 1 1/2	1	25.40	*1 1/2	38.10	.88	22.35	1 5/8	3.03	76.96	3.51	89.15	1.23	31.2
767LT _ 1 1/4 X 1 1/2	1 1/4	31.75	*1 1/2	38.10	1.09	27.7	1 3/4	3.23	82.00	4.10	104.1	1.62	41.2

ASSEMBLY INSTRUCTIONS: Reducer tube to stub 767 LT

*Supplied assembled on tube stub end (A1) nut+front & back ferrule. Tighten the nut on the body 1/2 a turn with a wrench. Low friction paste, See page 89.
"**D**" - Dimension is minimum opening. Dimensions are for reference only, and are subject to change without notice.

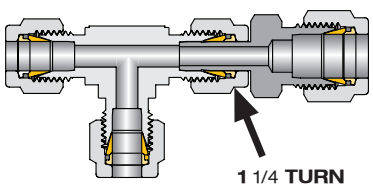

767 LT
REDUCER (Cont'd)

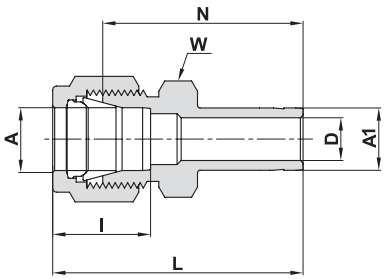

TUBE (INCH) TO STUB (METRIC)

Ordering Information	A Tube O.D.		A1 Tube O.D.	D		W Hex. Flat	N		L		I	
	inch	mm	mm	inch	mm	inch	inch	mm	inch	mm	inch	mm
767LT _ 1/8 X 6	1/8	3.17	6	.09	2.30	7/16	1.16	29.46	1.42	36.06	.50	12.7
767LT _ 1/4 X 6	1/4	6.35	6	.16	4.00	1/2	1.25	31.75	1.54	39.11	.60	15.2
767LT _ 3/8 X 8	3/8	9.52	8	.22	5.60	5/8	1.42	36.06	1.71	43.43	.66	16.8
767LT _ 3/8 X 12	3/8	9.52	12	.28	7.11	5/8	1.62	41.15	1.91	48.51	.66	16.8

767 LM
REDUCING PORT CONNECTOR

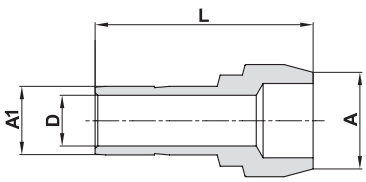

CONNECTS TWO LET-LOK® PORTS (METRIC)

Ordering Information	A Tube O.D.	A1 Tube O.D.	D	L
	mm	mm	mm	mm
767LM _ 6 X 3	6	3	2.1	22.9
767LM _ 8 X 6	8	6	4.0	24.7
767LM _ 10 X 6	10	6	4.0	25.8
767LM _ 10 X 8	10	8	5.6	26.1
767LM _ 12 X 6	12	6	4.0	29.1
767LM _ 12 X 8	12	8	5.6	29.8
767LM _ 12 X 10	12	10	7.1	30.6
767LM _ 16 X 12	16	12	8.8	37.5
767LM _ 38 X 25	*38	25	19.8	65.8

CONNECTS TWO LET-LOK® PORTS (INCH)

Ordering Information	A Tube O.D.		A1 Tube O.D.		D		L	
	inch	mm	inch	mm	inch	mm	inch	mm
767LM _ 1/8 X 1/16	1/8	3.17	1/16	1.58	.03	0.75	.68	17.3
767LM _ 1/4 X 1/16	1/4	6.35	1/16	1.58	.03	0.75	.71	18.0
767LM _ 1/4 X 1/8	1/4	6.35	1/8	3.17	.09	2.20	.89	22.6
767LM _ 3/8 X 1/8	3/8	9.52	1/8	3.17	.09	2.20	.91	23.2
767LM _ 3/8 X 1/4	3/8	9.52	1/4	6.35	.17	4.20	.98	24.9
767LM _ 1/2 X 1/4	1/2	12.70	1/4	6.35	.17	4.20	1.15	29.2
767LM _ 1/2 X 3/8	1/2	12.70	3/8	9.52	.28	7.10	1.20	30.5
767LM _ 3/4 X 1/2	3/4	19.05	1/2	12.70	.39	9.90	1.49	37.9

ASSEMBLY INSTRUCTIONS
Reducer Port Connector 767 LM

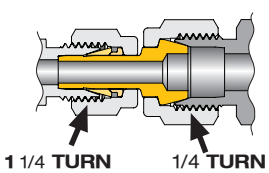

* Supplied assembled with Nut. Low friction paste, See page 89
"D" - Dimension is minimum opening. Dimensions are for reference only, and are subject to change without notice.

767 LP

PORT CONNECTOR

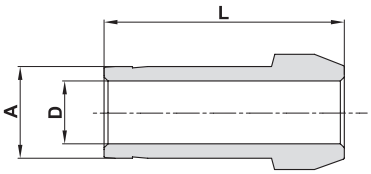

CONNECTS TWO LET-LOK® PORTS (METRIC)

Ordering Information	A Tube O.D.	D	L
	mm	mm	mm
767LP _ 3	3	2.1	22.2
767LP _ 6	6	4.0	25.0
767LP _ 8	8	5.6	25.9
767LP _ 10	10	7.1	27.1
767LP _ 12	12	8.8	36.2
767LP _ 16	16	12.7	37.4
767LP _ 18	18	13.9	37.4
767LP _ 38	*38	31.6	81.9
767LP _ 50	*50	42.8	114.0

CONNECTS TWO LET-LOK® PORTS (INCH)

Ordering Information	A Tube O.D.		D		L	
	inch	mm	inch	mm	inch	mm
767LP _ 1/16	1/16	1.58	.03	0.75	.54	13.7
767LP _ 1/8	1/8	3.17	.09	2.20	.88	22.4
767LP _ 1/4	1/4	6.35	.17	4.20	.98	24.9
767LP _ 5/16	5/16	7.93	.24	6.00	1.02	25.9
767LP _ 3/8	3/8	9.52	.27	6.85	1.03	26.2
767LP _ 1/2	1/2	12.70	.37	9.40	1.41	35.8
767LP _ 3/4	3/4	19.05	.59	15.00	1.47	37.3
767LP _ 1	1	25.40	.80	20.30	1.90	48.1
767LP _ 1 1/4	*1 1/4	31.75	1.02	26.00	2.72	69.1
767LP _ 1 1/2	*1 1/2	38.10	1.25	31.60	3.31	84.1
767LP _ 2	*2	50.80	1.72	43.67	4.56	115.8

Port Connector 767LP

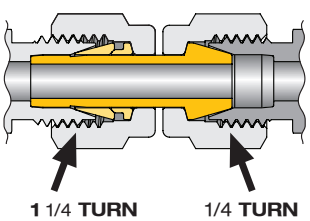

* Supplied assembled with Nuts and Ferrules. Low friction paste, See page 89
"**D**" - Dimension is minimum opening. Dimensions are for reference only, and are subject to change without notice.

768 L

MALE CONNECTOR

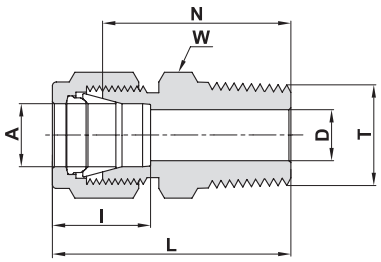

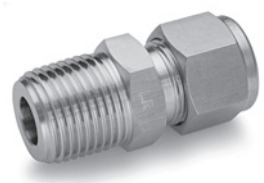

TUBE (METRIC) MALE NPT THREAD

Ordering Information	A Tube O.D.	T (NPT)	D	W Hex. Flat	N	L	I
	mm	inch	mm	mm	mm	mm	mm
768L _ 2 X 1/8	2	1/8	1.7	12	23.9	30.5	12.9
768L _ 3 X 1/8	3	1/8	2.4	12	23.9	30.5	12.9
768L _ 3 X 1/4	3	1/4	2.4	14	29.0	35.6	12.9
768L _ 4 X 1/8	4	1/8	2.4	12	24.6	31.2	13.7
768L _ 4 X 1/4	4	1/4	2.4	14	29.7	36.3	13.7
768L _ 6 X 1/8	6	1/8	4.8	14	25.4	32.8	15.3
768L _ 6 X 1/4	6	1/4	4.8	14	30.5	37.9	15.3
768L _ 6 X 3/8	6	3/8	4.8	18	31.0	38.4	15.3
768L _ 6 X 1/2	6	1/2	4.8	22	37.3	44.7	15.3
768L _ 8 X 1/8	8	1/8	4.8	15	26.7	34.2	16.2
768L _ 8 X 1/4	8	1/4	6.4	15	31.2	38.7	16.2
768L _ 8 X 3/8	8	3/8	6.4	18	31.8	39.3	16.2
768L _ 8 X 1/2	8	1/2	6.4	22	38.1	45.6	16.2
768L _ 10 X 1/8	10	1/8	4.8	18	28.7	36.3	17.2
768L _ 10 X 1/4	10	1/4	7.9	18	33.3	40.9	17.2
768L _ 10 X 3/8	10	3/8	7.9	18	33.3	40.9	17.2
768L _ 10 X 1/2	10	1/2	7.9	22	38.9	46.5	17.2
768L _ 10 X 3/4	10	3/4	7.9	27	40.4	48.0	17.2
768L _ 12 X 1/8	12	1/8	4.8	22	28.7	38.8	22.8
768L _ 12 X 1/4	12	1/4	7.1	22	33.3	43.4	22.8
768L _ 12 X 3/8	12	3/8	9.5	22	33.3	43.4	22.8
768L _ 12 X 1/2	12	1/2	9.5	22	38.9	49.0	22.8
768L _ 12 X 3/4	12	3/4	9.5	27	40.4	50.5	22.8
768L _ 14 X 1/4	14	1/4	7.1	24	34.0	44.1	24.4
768L _ 14 X 3/8	14	3/8	9.5	24	34.0	44.1	24.4
768L _ 14 X 1/2	14	1/2	11.1	24	38.9	49.0	24.4
768L _ 15 X 1/2	15	1/2	11.9	24	38.9	49.0	24.4
768L _ 16 X 3/8	16	3/8	9.5	24	34.0	44.1	24.4
768L _ 16 X 1/2	16	1/2	11.9	24	38.9	49.0	24.4
768L _ 16 X 3/4	16	3/4	12.7	27	40.4	50.5	24.4
768L _ 18 X 1/2	18	1/2	11.9	27	40.4	50.5	24.4
768L _ 18 X 3/4	18	3/4	15.1	27	40.4	50.5	24.4
768L _ 20 X 1/2	20	1/2	11.9	30	42.2	52.3	26.0
768L _ 20 X 3/4	20	3/4	15.9	30	42.2	52.3	26.0
768L _ 22 X 3/4	22	3/4	15.9	30	42.2	52.3	26.0
768L _ 22 X 1	22	1	18.3	35	47.0	57.1	26.0
768L _ 25 X 1/2	25	1/2	11.9	35	45.2	57.5	31.3
768L _ 25 X 3/4	25	3/4	15.9	35	45.2	57.5	31.3
768L _ 25 X 1	25	1	21.8	35	50.0	62.3	31.3
768L _ 38 X 1 1/2	*38	1 1/2	33.7	55	64.0	91.6	49.4
768L _ 50 X 2”	*50	2	45.2	3 inch	76.2	113.3	65.0

* Supplied assembled with Nuts and Ferrules. Low friction paste, See page 89
“**D**” - Dimension is minimum opening. Dimensions are for reference only, and are subject to change without notice.

Cont’d next page

768 L

MALE CONNECTOR (Cont'd)

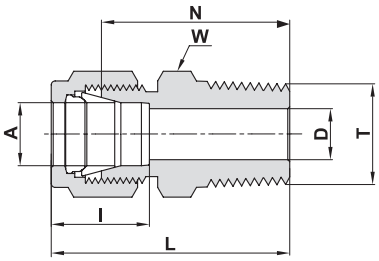

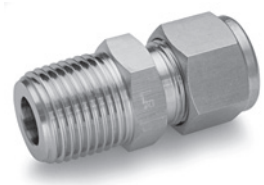

TUBE (INCH) MALE NPT THREAD

Ordering Information	A Tube O.D.		T (NPT)	D		W Hex. Flat	N		L		I	
	inch	mm	inch	inch	mm	inch	inch	mm	inch	mm	inch	mm
768L _ 1/16 X 1/16	1/16	1.58	1/16	.05	1.27	5/16	.79	20.10	.94	23.88	.34	8.6
768L _ 1/16 X 1/8	1/16	1.58	1/8	.05	1.27	7/16	.88	22.35	1.03	26.10	.34	8.6
768L _ 1/16 X 1/4	1/16	1.58	1/4	.05	1.27	9/16	1.07	27.17	1.22	30.98	.34	8.6
768L _ 1/8 X 1/16	1/8	3.17	1/16	.09	2.28	7/16	.91	23.11	1.17	29.71	.50	12.7
768L _ 1/8 X 1/8	1/8	3.17	1/8	.09	2.28	7/16	.94	23.90	1.20	30.48	.50	12.7
768L _ 1/8 X 1/4	1/8	3.17	1/4	.09	2.28	9/16	1.14	28.95	1.40	35.56	.50	12.7
768L _ 1/8 X 3/8	1/8	3.17	3/8	.09	2.28	11/16	1.15	29.21	1.41	35.81	.50	12.7
768L _ 1/8 X 1/2	1/8	3.17	1/2	.09	2.28	7/8	1.40	35.56	1.66	42.16	.50	12.7
768L _ 3/16 X 1/8	3/16	4.76	1/8	.12	3.04	7/16	.97	24.63	1.23	31.24	.54	13.7
768L _ 3/16 X 1/4	3/16	4.76	1/4	.12	3.04	9/16	1.17	29.72	1.43	36.32	.54	13.7
768L _ 1/4 X 1/16	1/4	6.35	1/16	.12	3.04	1/2	1.00	25.40	1.29	32.76	.60	15.2
768L _ 1/4 X 1/8	1/4	6.35	1/8	.19	4.82	1/2	1.00	25.40	1.29	32.76	.60	15.2
768L _ 1/4 X 1/4	1/4	6.35	1/4	.19	4.82	9/16	1.20	30.50	1.49	37.85	.60	15.2
768L _ 1/4 X 3/8	1/4	6.35	3/8	.19	4.82	11/16	1.22	30.98	1.51	38.35	.60	15.2
768L _ 1/4 X 1/2	1/4	6.35	1/2	.19	4.82	7/8	1.47	37.34	1.76	44.70	.60	15.2
768L _ 1/4 X 3/4	1/4	6.35	3/4	.19	4.82	1 1/16	1.53	38.86	1.82	46.22	.60	15.2
768L _ 5/16 X 1/8	5/16	7.93	1/8	.19	4.82	9/16	1.05	26.67	1.34	34.03	.64	16.2
768L _ 5/16 X 1/4	5/16	7.93	1/4	.25	6.35	9/16	1.23	31.24	1.52	38.60	.64	16.2
768L _ 5/16 X 3/8	5/16	7.93	3/8	.25	6.35	11/16	1.25	31.75	1.54	39.11	.64	16.2
768L _ 3/8 X 1/8	3/8	9.52	1/8	.19	4.82	5/8	1.10	27.90	1.39	35.30	.66	16.8
768L _ 3/8 X 1/4	3/8	9.52	1/4	.28	7.11	5/8	1.28	32.51	1.57	39.87	.66	16.8
768L _ 3/8 X 3/8	3/8	9.52	3/8	.28	7.11	11/16	1.28	32.51	1.57	39.87	.66	16.8
768L _ 3/8 X 1/2	3/8	9.52	1/2	.28	7.11	7/8	1.53	38.90	1.82	46.23	.66	16.8
768L _ 3/8 X 3/4	3/8	9.52	3/4	.28	7.11	1 1/16	1.59	40.38	1.88	47.75	.66	16.8
768L _ 3/8 X 1	3/8	9.52	1	.28	7.11	1 3/8	1.85	46.99	2.14	54.35	.66	16.8
768L _ 1/2 X 1/8	1/2	12.70	1/8	.19	4.82	13/16	1.13	28.70	1.53	38.86	.90	22.9
768L _ 1/2 X 1/4	1/2	12.70	1/4	.28	7.11	13/16	1.31	33.27	1.71	43.43	.90	22.9
768L _ 1/2 X 3/8	1/2	12.70	3/8	.38	9.65	13/16	1.31	33.27	1.71	43.43	.90	22.9
768L _ 1/2 X 1/2	1/2	12.70	1/2	.41	10.41	7/8	1.53	38.90	1.93	49.02	.90	22.9
768L _ 1/2 X 3/4	1/2	12.70	3/4	.41	10.41	1 1/16	1.59	40.38	1.99	50.54	.90	22.9
768L _ 1/2 X 1	1/2	12.70	1	.41	10.41	1 3/8	1.85	47.00	2.25	57.15	.90	22.9

Reference Specifications:

- 60° Thread angle
- Pitch measured in inches
- Truncation of root and crest is flat
- Taper angle 1° 47'

American Standard Pipe Thread (NPT). NPT (National Pipe Tapered) is made to specifications outlined in ASNI B1.20.1.

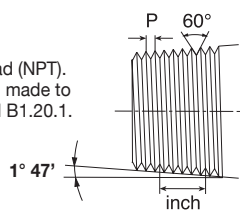

Thermoelement (See Page 38)

"**D**" - Dimension is minimum opening. Dimensions are for reference only, and are subject to change without notice.

Cont'd next page

768 L

MALE CONNECTOR (Cont'd)

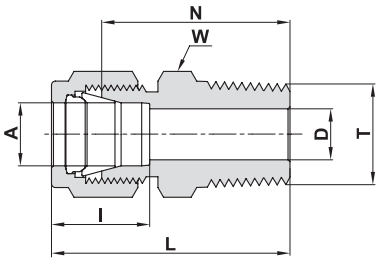

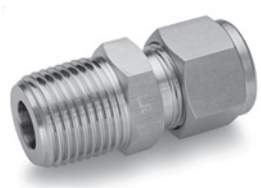

TUBE (INCH) MALE NPT THREAD

Ordering Information	A Tube O.D.		T (NPT)	D		W Hex. Flat	N		L		I	
	inch	mm	inch	inch	mm	inch	inch	mm	inch	mm	inch	mm
768L _ 5/8 X 1/4	5/8	15.87	1/4	.28	7.11	15/16	1.34	34.03	1.74	44.19	.96	24.4
768L _ 5/8 X 3/8	5/8	15.87	3/8	.38	9.65	15/16	1.34	34.03	1.74	44.19	.96	24.4
768L _ 5/8 X 1/2	5/8	15.87	1/2	.47	11.90	15/16	1.53	38.86	1.93	49.02	.96	24.4
768L _ 5/8 X 3/4	5/8	15.87	3/4	.50	12.70	1 1/16	1.59	40.38	1.99	50.54	.96	24.4
768L _ 3/4 X 3/8	3/4	19.05	3/8	.38	9.50	1 1/16	1.38	35.05	1.78	45.21	.96	24.4
768L _ 3/4 X 1/2	3/4	19.05	1/2	.47	11.90	1 1/16	1.59	40.38	1.99	50.54	.96	24.4
768L _ 3/4 X 3/4	3/4	19.05	3/4	.62	15.75	1 1/16	1.59	40.38	1.99	50.54	.96	24.4
768L _ 3/4 X 1	3/4	19.05	1	.62	15.75	1 3/8	1.85	47.00	2.25	57.15	.96	24.4
768L _ 7/8 X 1/2	7/8	22.22	1/2	.47	11.90	1 3/16	1.59	40.38	1.99	50.54	1.02	25.9
768L _ 7/8 X 3/4	7/8	22.22	3/4	.62	15.75	1 3/16	1.59	40.38	1.99	50.54	1.02	25.9
768L _ 7/8 X 1	7/8	22.22	1	.72	18.28	1 3/8	1.85	46.99	2.25	57.15	1.02	25.9
768L _ 1 X 1/2	1	25.40	1/2	.47	11.90	1 3/8	1.78	45.21	2.26	57.40	1.23	31.2
768L _ 1 X 3/4	1	25.40	3/4	.62	15.75	1 3/8	1.78	45.21	2.26	57.40	1.23	31.2
768L _ 1 X 1	1	25.40	1	.88	22.35	1 3/8	1.97	50.03	2.45	62.23	1.23	31.2
768L _ 1 1/4 X 1	*1 1/4	31.75	1	.86	21.80	1 3/4	2.17	55.12	3.04	77.22	1.62	41.2
768L _ 1 1/4 X 1 1/4	*1 1/4	31.75	1 1/4	1.09	27.70	1 3/4	2.17	55.12	3.04	77.22	1.62	41.2
768L _ 1 1/2 X 1 1/2	*1 1/2	38.10	1 1/2	1.34	34.00	2 1/8	2.43	61.72	3.50	88.90	1.97	50.0
768L _ 2 X 2	*2	50.80	2	1.81	45.97	2 3/4	3.00	76.20	4.47	113.54	2.66	67.6

* Including low friction paste, See page 89

Reference Specifications:

- 60° Thread angle
- Pitch measured in inches
- Truncation of root and crest is flat
- Taper angle 1° 47'

American Standard Pipe Thread (NPT). NPT (National Pipe Tapered) is made to specifications outlined in ASNI B1.20.1.

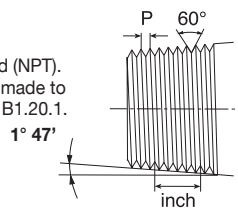

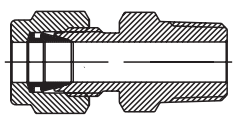

Thermoelement

For ordering: use catalog number of the selected fitting and add the suffix TC.
Example: 768 L SS 1/4 x 1/4 **TC**

"**D**" - Dimension is minimum opening. Dimensions are for reference only, and are subject to change without notice.

768 LR

MALE CONNECTOR

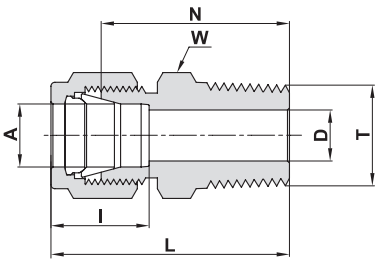

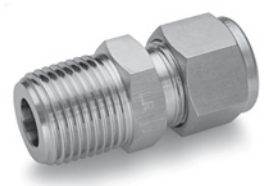

TUBE (METRIC) ISO TAPERED THREAD

Ordering Information	A Tube O.D.	T (ISO)	D	W Hex. Flat	N	L	I
	mm	inch	mm	mm	mm	mm	mm
768LR _ 2 X 1/8	2	R-1/8	1.7	12	23.9	30.5	12.9
768LR _ 3 X 1/8	3	R-1/8	2.4	12	23.9	30.5	12.9
768LR _ 3 X 1/4	3	R-1/4	2.4	14	29.0	35.6	12.9
768LR _ 4 X 1/8	4	R-1/8	2.4	12	24.6	31.2	13.7
768LR _ 4 X 1/4	4	R-1/4	2.4	14	29.7	36.3	13.7
768LR _ 6 X 1/8	6	R-1/8	4.8	14	25.4	32.8	15.3
768LR _ 6 X 1/4	6	R-1/4	4.8	14	30.5	37.9	15.3
768LR _ 6 X 3/8	6	R-3/8	4.8	18	31.0	38.4	15.3
768LR _ 6 X 1/2	6	R-1/2	4.8	22	37.3	44.7	15.3
768LR _ 8 X 1/8	8	R-1/8	4.8	15	26.7	34.2	16.2
768LR _ 8 X 1/4	8	R-1/4	6.4	15	31.2	38.7	16.2
768LR _ 8 X 3/8	8	R-3/8	6.4	18	31.8	39.2	16.2
768LR _ 8 X 1/2	8	R-1/2	6.4	22	38.1	45.6	16.2
768LR _ 10 X 1/8	10	R-1/8	4.8	18	28.7	36.3	17.2
768LR _ 10 X 1/4	10	R-1/4	7.9	18	33.3	40.9	17.2
768LR _ 10 X 3/8	10	R-3/8	7.9	18	33.3	40.9	17.2
768LR _ 10 X 1/2	10	R-1/2	7.9	22	38.9	46.5	17.2
768LR _ 10 X 3/4	10	R-3/4	7.9	27	40.4	48.0	17.2
768LR _ 12 X 1/4	12	R-1/4	7.1	22	33.3	43.4	22.8
768LR _ 12 X 3/8	12	R-3/8	9.5	22	33.3	43.4	22.8
768LR _ 12 X 1/2	12	R-1/2	9.5	22	38.9	49.0	22.8
768LR _ 12 X 3/4	12	R-3/4	9.5	27	40.4	50.5	22.8
768LR _ 14 X 1/4	14	R-1/4	7.1	24	34.0	44.1	24.4
768LR _ 14 X 3/8	14	R-3/8	9.5	24	34.0	44.1	24.4
768LR _ 15 X 1/2	15	R-1/2	11.9	24	38.9	49.0	24.4
768LR _ 16 X 1/4	16	R-1/4	7.1	24	34.0	44.1	24.4
768LR _ 16 X 3/8	16	R-3/8	9.5	24	34.0	44.1	24.4
768LR _ 16 X 1/2	16	R-1/2	11.9	24	38.9	49.0	24.4
768LR _ 16 X 3/4	16	R-3/4	12.7	27	40.4	50.5	24.4
768LR _ 18 X 1/2	18	R-1/2	11.9	27	40.4	50.5	24.4
768LR _ 18 X 3/4	18	R-3/4	15.1	27	40.4	50.5	24.4
768LR _ 20 X 1/2	20	R-1/2	11.9	30	42.2	52.3	26.0
768LR _ 20 X 3/4	20	R-3/4	15.9	30	42.2	52.3	26.0
768LR _ 22 X 3/4	22	R-3/4	15.9	30	42.2	52.3	26.0
768LR _ 22 X 1	22	R-1	18.3	35	47.0	57.1	26.0
768LR _ 25 X 1/2	25	R-1/2	11.9	35	45.2	57.5	31.3
768LR _ 25 X 3/4	25	R-3/4	15.9	35	45.2	57.5	31.3
768LR _ 25 X 1	25	R-1	11.9	35	45.2	57.5	31.3
768LR _ 38 X 1 1/2	*38	R-1 1/2	33.7	55	64.0	91.6	49.4
768LR _ 50 X 2”	*50	R-2	45.2	3 inch	76.2	113.3	65.0

Designation:
Marking LR on Hex

Reference Specifications: DIN -ISO 2999
BS - 21
JIS - B0203
ISO - 7/1-BSP-T

Thermoelement
(See Page 38)

* Including low friction paste, See page 89
“D” - Dimension is minimum opening.
Dimensions are for reference only, and are subject to change without notice.

768 LR

MALE CONNECTOR (cont'd)

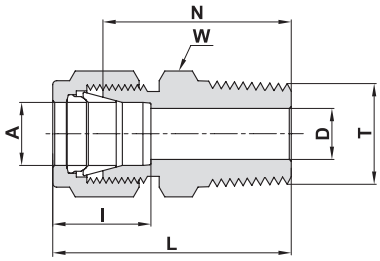

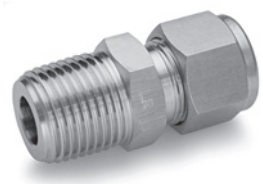

TUBE (INCH) ISO TAPERED THREAD

Ordering Information	A Tube O.D.		T (ISO)	D		W Hex. Flat	N		L		I	
	inch	mm	inch	inch	mm	inch	inch	mm	inch	mm	inch	mm
768LR _ 1/8 X 1/8	1/8	3.17	R-1/8	.09	2.28	7/16	.94	23.90	1.20	30.48	.50	12.70
768LR _ 1/8 X 1/4	1/8	3.17	R-1/4	.09	2.28	9/16	1.14	28.95	1.40	35.56	.50	12.70
768LR _ 1/4 X 1/8	1/4	6.35	R-1/8	.19	4.82	1/2	1.00	25.40	1.29	32.76	.60	15.20
768LR _ 1/4 X 1/4	1/4	6.35	R-1/4	.19	4.82	9/16	1.20	30.50	1.49	37.85	.60	15.20
768LR _ 1/4 X 3/8	1/4	6.35	R-3/8	.19	4.82	11/16	1.22	30.98	1.51	38.35	.60	15.20
768LR _ 1/4 X 1/2	1/4	6.35	R-1/2	.19	4.82	7/8	1.47	37.34	1.76	44.70	.60	15.20
768LR _ 5/16 X 1/8	5/16	7.93	R-1/8	.19	4.82	9/16	1.05	26.67	1.34	34.03	.64	16.20
768LR _ 5/16 X 1/4	5/16	7.93	R-1/4	.25	6.35	9/16	1.23	31.24	1.52	38.60	.64	16.20
768LR _ 3/8 X 1/8	3/8	9.52	R-1/8	.19	4.82	5/8	1.10	27.90	1.39	35.30	.66	16.80
768LR _ 3/8 X 1/4	3/8	9.52	R-1/4	.28	7.11	5/8	1.28	32.51	1.57	39.87	.66	16.80
768LR _ 3/8 X 3/8	3/8	9.52	R-3/8	.28	7.11	11/16	1.28	32.51	1.57	39.87	.66	16.80
768LR _ 3/8 X 1/2	3/8	9.52	R-1/2	.28	7.11	7/8	1.53	38.90	1.82	46.23	.66	16.80
768LR _ 3/8 X 3/4	3/8	9.52	R-3/4	.28	7.11	1 1/16	1.59	40.38	1.88	47.75	.66	16.80
768LR _ 1/2 X 1/4	1/2	12.70	R-1/4	.28	7.11	13/16	1.31	33.27	1.71	43.43	.90	22.90
768LR _ 1/2 X 3/8	1/2	12.70	R-3/8	.38	9.65	13/16	1.31	33.27	1.71	43.43	.90	22.90
768LR _ 1/2 X 1/2	1/2	12.70	R-1/2	.41	10.41	7/8	1.53	38.90	1.93	49.02	.90	22.90
768LR _ 1/2 X 3/4	1/2	12.70	R-3/4	.41	10.41	1 1/16	1.59	40.38	1.99	50.54	.90	22.90
768LR _ 5/8 X 1/2	5/8	15.87	R-1/2	.47	11.90	15/16	1.53	38.86	1.93	49.02	.96	24.40
768LR _ 3/4 X 3/4	3/4	19.05	R-3/4	.62	15.74	1 1/16	1.59	40.38	1.99	50.54	.96	24.40
768LR _ 3/4 X 1	3/4	19.05	R-1	.62	15.74	1 3/8	1.85	47.00	2.25	57.15	.96	24.40
768LR _ 1 X 3/4	1	25.40	R-3/4	.63	15.90	1 3/8	1.78	45.21	2.26	57.40	1.23	31.20
768LR _ 1 X 1	1	25.40	R-1	.88	22.35	1 3/8	1.97	50.03	2.45	62.23	1.23	31.20
768LR _ 1 1/4 X 1 1/4	*1 1/4	31.75	R-1 1/4	1.09	27.70	1 3/4	2.17	55.12	3.04	77.22	1.62	41.20

* Including low friction paste, See page 89

Reference Specifications:

DIN -ISO 2999
BS - 21
JIS - B0203
ISO - 7/1-BSP-T

55° Thread angle
Truncation of root and crest is round
Taper angle 1°47'

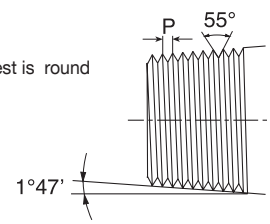

Designation:
Marking LR on Hex

Thermoelement (See Page 38)

"**D**" - Dimension is minimum opening. Dimensions are for reference only, and are subject to change without notice.

768 LG

MALE CONNECTOR

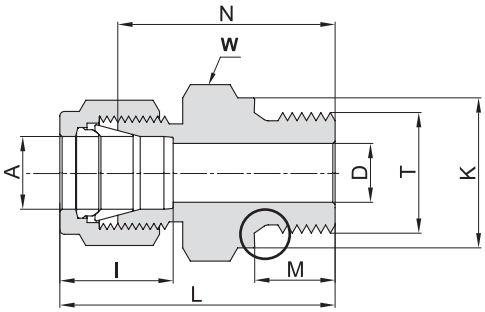

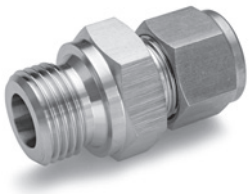

TUBE (METRIC) ISO PARALLEL THREAD

Ordering Information	A Tube O.D.	T (P-ISO)	D	K	W Hex. Flat	N	M	L	I
	mm	inch	mm	mm	mm	mm	mm	mm	mm
768LG _ 2 X 1/8	2	G-1/8	1.7	13.8	14	23.4	7.1	30.0	12.9
768LG _ 3 X 1/8	3	G-1/8	2.4	13.8	14	23.4	7.1	30.0	12.9
768LG _ 3 X 1/4	3	G-1/4	2.4	18.0	19	28.7	11.2	35.3	12.9
768LG _ 4 X 1/8	4	G-1/8	2.4	13.8	14	24.1	7.1	30.7	13.7
768LG _ 6 X 1/8	6	G-1/8	4.0	13.8	14	24.9	7.1	32.3	15.3
768LG _ 6 X 1/4	6	G-1/4	4.8	18.0	19	30.2	11.2	37.6	15.3
768LG _ 6 X 3/8	6	G-3/8	4.8	21.8	22	31.5	11.2	38.9	15.3
768LG _ 6 X 1/2	6	G-1/2	4.8	26.0	27	37.3	14.2	44.7	15.3
768LG _ 8 X 1/8	8	G-1/8	4.0	13.8	15	25.7	7.1	33.2	16.2
768LG _ 8 X 1/4	8	G-1/4	6.4	18.0	19	31.0	11.2	38.5	16.2
768LG _ 8 X 3/8	8	G-3/8	6.4	21.8	22	32.3	11.2	39.8	16.2
768LG _ 8 X 1/2	8	G-1/2	6.4	26.0	27	38.1	14.2	45.6	16.2
768LG _ 10 X 1/4	10	G-1/4	6.4	18.0	19	31.8	11.2	39.4	17.2
768LG _ 10 X 3/8	10	G-3/8	7.9	21.8	22	33.0	11.2	40.6	17.2
768LG _ 10 X 1/2	10	G-1/2	7.9	26.0	27	38.9	14.2	46.5	17.2
768LG _ 12 X 1/4	12	G-1/4	5.9	18.0	22	32.5	11.2	42.6	22.8
768LG _ 12 X 3/8	12	G-3/8	7.9	21.8	22	33.0	11.2	43.1	22.8
768LG _ 12 X 1/2	12	G-1/2	9.5	26.0	27	37.4	14.2	47.5	22.8
768LG _ 12 X 3/4	12	G-3/4	9.5	32.0	35	42.7	15.7	52.8	22.8
768LG _ 14 X 3/8	14	G-3/8	7.9	21.8	24	33.8	11.2	43.9	24.4
768LG _ 14 X 1/2	14	G-1/2	11.1	26.0	27	38.9	14.2	49.0	24.4
768LG _ 15 X 3/8	15	G-3/8	7.9	21.8	24	33.8	11.2	43.9	24.4
768LG _ 15 X 1/2	15	G-1/2	11.9	26.0	27	37.4	14.2	47.5	24.4
768LG _ 15 X 3/4	15	G-3/4	11.9	32.0	35	42.1	15.7	52.8	24.4
768LG _ 16 X 3/8	16	G-3/8	7.9	21.8	24	33.8	11.2	43.9	24.4
768LG _ 16 X 1/2	16	G-1/2	11.9	26.0	27	38.9	14.2	49.0	24.4
768LG _ 16 X 3/4	16	G-3/4	12.7	32.0	35	42.1	15.7	52.8	24.4
768LG _ 18 X 1/2	18	G-1/2	11.9	26.0	27	38.9	14.2	49.0	24.4
768LG _ 18 X 3/4	18	G-3/4	15.1	32.0	35	42.7	15.7	52.8	24.4
768LG _ 20 X 1/2	20	G-1/2	11.9	26.0	30	40.4	14.2	50.5	26.0
768LG _ 20 X 3/4	20	G-3/4	15.9	32.0	35	42.7	15.7	52.8	26.0
768LG _ 22 X 3/4	22	G-3/4	15.9	32.0	35	42.7	15.7	52.8	26.0
768LG _ 22 X 1	22	G-1	18.3	39.0	41	45.2	18.3	55.3	26.0
768LG _ 25 X 3/4	25	G-3/4	15.9	32.0	35	45.2	15.7	57.5	31.3
768LG _ 25 X 1	25	G-1	19.8	39.0	41	47.8	18.3	60.1	31.3
768LG _ 38 X1 1/2	*38	G-1 1/2	31.8	54.7	55	63.2	22.1	90.9	49.4

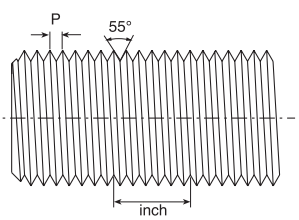

Reference Specifications:

DIN - ISO 228/1
BS - 2779
JIS - B0202
ISO - 228/1-BSP-P

- 55° Thread angle
- Pitch measured in inches
- Truncation of root and crest is round
- Diameter measured in inches

Designation:

Marking LG on Hex.

* Including low friction paste, See page 89.
"**D**" - Dimension is minimum opening.
Dimensions are for reference only, and are subject to change without notice.

768 LG

MALE CONNECTOR

(Cont'd)

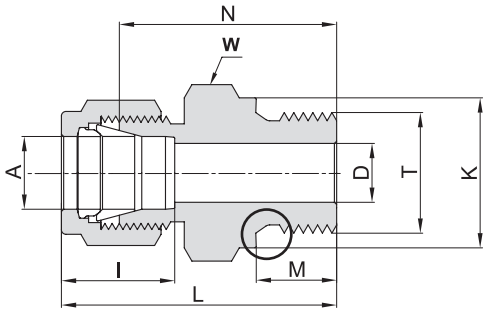

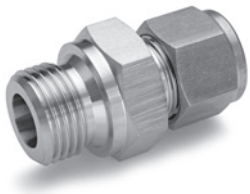

TUBE (INCH) TO ISO PARALLEL THREAD

Ordering Information	A Tube O.D.		T (P-ISO)		D		K		W Hex. Flat	N		M		L		I	
	inch	mm	inch	mm	inch	mm	inch	mm	inch	inch	mm	inch	mm	inch	mm	inch	mm
768LG _ 1/8 X 1/8	1/8	3.17	G-1/8	3.17	0.09	2.30	0.54	13.80	9/16	0.92	23.40	0.28	7.10	1.18	30.00	0.50	12.7
768LG _ 1/8 X 1/4	1/8	3.17	G-1/4	6.35	0.09	2.30	0.71	18.00	3/4	1.13	28.70	0.44	11.20	1.39	35.30	0.50	12.7
768LG _ 1/8 X 3/8	1/8	3.17	G-3/8	9.52	0.09	2.30	0.86	21.80	7/8	1.17	29.72	0.44	11.20	1.43	36.32	0.50	12.7
768LG _ 1/8 X 1/2	1/8	3.17	G-1/2	12.70	0.09	2.30	1.02	26.00	1 1/16	1.40	35.70	0.56	14.20	1.66	42.16	0.50	12.7
768LG _ 3/16 X 1/8	3/16	4.76	G-1/8	3.17	0.12	3.10	0.54	13.80	9/16	0.95	24.10	0.28	7.10	1.21	30.70	0.54	13.7
768LG _ 1/4 X 1/8	1/4	6.35	G-1/8	3.17	0.16	4.10	0.54	13.80	9/16	0.98	24.90	0.28	7.10	1.27	32.26	0.60	15.2
768LG _ 1/4 X 1/4	1/4	6.35	G-1/4	6.35	0.19	4.80	0.71	18.00	3/4	1.19	30.20	0.44	11.20	1.48	37.60	0.60	15.2
768LG _ 1/4 X 3/8	1/4	6.35	G-3/8	9.52	0.19	4.80	0.86	21.80	7/8	1.24	31.50	0.44	11.20	1.50	38.10	0.60	15.2
768LG _ 1/4 X 1/2	1/4	6.35	G-1/2	12.70	0.19	4.80	1.02	26.00	1 1/16	1.47	37.30	0.56	14.20	1.76	44.70	0.60	15.2
768LG _ 5/16 X 1/4	5/16	7.93	G-1/4	6.35	0.25	6.40	0.71	18.00	3/4	1.22	31.00	0.44	11.20	1.51	38.36	0.64	16.2
768LG _ 5/16 X 3/8	5/16	7.93	G-3/8	9.52	0.25	6.40	0.86	21.80	7/8	1.27	32.30	0.44	11.20	1.56	39.66	0.64	16.2
768LG _ 3/8 X 1/8	3/8	9.52	G-1/8	3.17	0.16	4.00	1.26	32.0	5/8	1.05	26.7	0.28	7.10	1.34	34.03	0.66	16.8
768LG _ 3/8 X 1/4	3/8	9.52	G-1/4	6.35	0.23	5.80	0.71	18.00	3/4	1.25	31.75	0.44	11.20	1.54	39.11	0.66	16.8
768LG _ 3/8 X 3/8	3/8	9.52	G-3/8	9.52	0.28	7.10	0.86	21.80	7/8	1.30	33.00	0.44	11.20	1.59	40.40	0.66	16.8
768LG _ 3/8 X 1/2	3/8	9.52	G-1/2	12.70	0.28	7.10	1.02	26.00	1 1/16	1.53	38.86	0.56	14.20	1.82	46.22	0.66	16.8
768LG _ 1/2 X 1/4	1/2	12.70	G-1/4	6.35	0.23	5.80	0.71	18.00	13/16	1.28	32.50	0.44	11.20	1.68	42.67	0.90	22.9
768LG _ 1/2 X 3/8	1/2	12.70	G-3/8	9.52	0.31	7.90	0.86	21.80	7/8	1.30	33.00	0.44	11.20	1.70	43.18	0.90	22.9
768LG _ 1/2 X 1/2	1/2	12.70	G-1/2	12.70	0.41	10.40	1.02	26.00	1 1/16	1.47	37.40	0.56	14.20	1.87	47.56	0.90	22.9
768LG _ 1/2 X 3/4	1/2	12.70	G-3/4	19.05	0.41	10.40	1.26	32.00	1 5/16	1.68	42.70	0.62	15.70	2.08	52.86	0.90	22.9
768LG _ 5/8 X 3/8	5/8	15.87	G-3/8	9.52	0.31	7.90	0.86	21.80	24mm	1.33	33.80	0.44	11.20	1.73	43.96	0.96	24.4
768LG _ 5/8 X 1/2	5/8	15.87	G-1/2	12.70	0.47	11.90	1.02	26.00	1 1/16	1.53	38.90	0.56	14.20	1.93	49.10	0.96	24.4
768LG _ 3/4 X 1/2	3/4	19.05	G-1/2	12.70	0.47	11.90	1.02	26.00	1 1/16	1.53	38.86	0.56	14.20	1.93	49.00	0.96	24.4
768LG _ 3/4 X 3/4	3/4	19.05	G-3/4	19.05	0.62	15.80	1.26	32.00	1 5/16	1.68	42.70	0.62	15.70	2.08	52.83	0.96	24.4
768LG _ 1 X 1/2	1	25.40	G-1/2	12.70	0.47	11.90	1.02	26.00	1 3/8	1.72	43.70	0.56	14.20	2.20	55.80	1.23	31.2
768LG _ 1 X 3/4	1	25.40	G-3/4	19.05	0.62	15.90	1.26	32.00	1 3/8	1.78	45.20	0.62	15.70	2.26	57.40	1.23	31.2
768LG _ 1 X 1	1	25.40	G-1	25.40	0.78	19.80	1.54	39.00	1 5/8	1.88	47.80	0.72	18.30	2.36	59.94	1.23	31.2

Designation:
Marking LG on Hex.

Reference Specifications:
DIN - ISO 228/1
BS - 2779
JIS - B0202
ISO - 228/1-BSP-P

- 55° Thread angle
- Pitch measured in inches
- Truncation of root and crest is round
- Diameter measured in inches

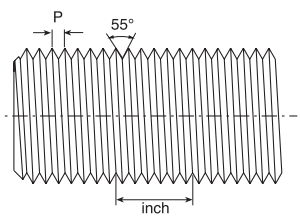

"**D**" - Dimension is minimum opening. Dimensions are for reference only, and are subject to change without notice.

768 LOK
MALE CONNECTOR

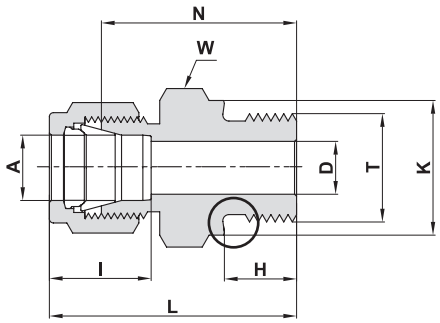

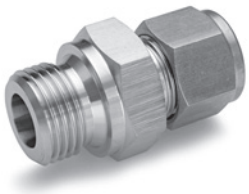

TUBE (METRIC) ISO PARALLEL THREAD

Ordering Information	A Tube O.D.	T (P-ISO)	D	K	W Hex. Flat	N	H	L	I
	mm	inch	mm	mm	mm	mm	mm	mm	mm
768LOK _ 3 X 1/8	3	G-1/8A	2.4	13.8	14	26.7	7.1	33.3	12.9
768LOK _ 3 X 1/4	3	G-1/4A	2.4	18.0	19	28.7	11.2	35.3	12.9
768LOK _ 4 X 1/8	4	G-1/8A	2.4	13.8	14	24.1	7.1	30.7	13.7
768LOK _ 6 X 1/8	6	G-1/8A	4.0	13.8	14	24.9	7.1	32.3	15.3
768LOK _ 6 X 1/4	6	G-1/4A	4.8	18.0	19	30.2	11.2	37.6	15.3
768LOK _ 6 X 3/8	6	G-3/8A	4.8	21.8	22	31.5	11.2	38.9	15.3
768LOK _ 6 X 1/2	6	G-1/2A	4.8	26.0	27	37.3	14.2	44.7	15.3
768LOK _ 8 X 1/8	8	G-1/8A	4.0	13.8	15	25.7	7.1	33.2	16.2
768LOK _ 8 X 1/4	8	G-1/4A	6.4	18.0	19	31.0	11.2	38.5	16.2
768LOK _ 8 X 3/8	8	G-3/8A	6.4	21.8	22	32.3	11.2	39.8	16.2
768LOK _ 8 X 1/2	8	G-1/2A	6.4	26.0	27	38.1	14.2	45.6	16.2
768LOK _ 10 X 1/4	10	G-1/4A	6.4	18.0	19	31.8	11.2	39.4	17.2
768LOK _ 10 X 3/8	10	G-3/8A	7.9	21.8	22	33.0	11.2	40.6	17.2
768LOK _ 10 X 1/2	10	G-1/2A	7.9	26.0	27	38.9	14.2	46.5	17.2
768LOK _ 12 X 1/4	12	G-1/4A	5.9	18.0	22	32.5	11.2	42.6	22.8
768LOK _ 12 X 3/8	12	G-3/8A	7.9	21.8	22	33.0	11.2	43.1	22.8
768LOK _ 12 X 1/2	12	G-1/2A	9.5	26.0	27	38.9	14.2	49.0	22.8
768LOK _ 12 X 3/4	12	G-3/4A	9.5	32.0	35	42.7	15.7	52.8	22.8
768LOK _ 15 X 1/2	15	G-1/2A	11.9	26.0	27	38.9	14.2	49.0	24.4
768LOK _ 16 X 3/8	16	G-3/8A	7.9	21.8	24	33.8	11.2	43.9	22.4
768LOK _ 16 X 1/2	16	G-1/2A	11.9	26.0	27	38.9	14.2	49.0	22.4
768LOK _ 18 X 1/2	18	G-1/2A	11.9	26.0	27	38.9	14.2	49.0	22.4
768LOK _ 18 X 3/4	18	G-3/4A	15.1	32.0	35	42.2	15.7	52.3	22.4
768LOK _ 20 X 1/2	20	G-1/2A	11.9	26.0	30	40.4	14.2	50.5	26.0
768LOK _ 20 X 3/4	20	G-3/4A	15.9	32.0	35	42.7	15.7	52.8	26.0
768LOK _ 22 X 3/4	22	G-3/4A	15.9	32.0	35	42.7	15.7	52.8	26.0
768LOK _ 22 X 1	22	G-1A	18.3	39.0	41	45.2	18.3	55.3	26.0
768LOK _ 25 X 3/4	25	G-3/4A	15.9	32.0	35	45.2	15.7	57.5	31.3
768LOK _ 25 X 1	25	G-1A	19.8	39.0	41	47.8	18.3	60.1	31.3
768LOK _ 38X1 1/2	*38	G-1 1/2A	31.8	54.7	55	64.9	20.6	92.1	49.4

* Including low friction paste, See page 89

Reference Specifications:

DIN - ISO 228/1
BS - 2779
JIS - B0202
ISO - 228/1-BSP-P

Designation:
Marking LOK on Hex.

"**D**" - Dimension is minimum opening. Dimensions are for reference only, and are subject to change without notice.

768 LOB
MALE CONNECTOR

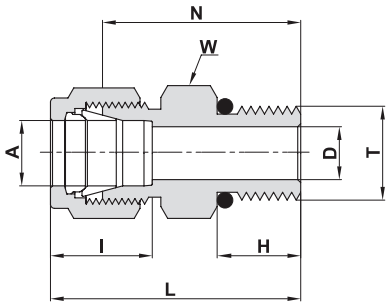

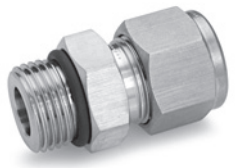

SAE/MS STRAIGHT THREAD BOSS***									
Ordering Information	A Tube O.D.	T Straight Thread UN	D	W Hex. Flat	N	H	L	I	O-Ring**
	mm	inch	mm	mm	mm	mm	mm	mm	
768LOB _ 3 X 5/16-24	3	5/16-24	2.4	7/16”	23.4	7.6	30.0	12.9	-902
768LOB _ 3 X 9/16-18	3	9/16-18	2.4	18	26.7	9.9	33.3	12.9	-906
768LOB _ 6 X 1/2-20	6	1/2-20	4.8	17	27.4	9.1	34.8	15.3	-905
768LOB _ 6 X 9/16-18	6	9/16-18	4.8	18	28.2	9.9	35.6	15.3	-906
768LOB _ 6 X 7/8-14	6	7/8-14	4.8	27	33.3	12.7	40.7	15.3	-910
768LOB _ 8 X 1/2-20	8	1/2-20	6.4	17	27.4	9.1	34.9	16.2	-905
768LOB _ 8 X 9/16-18	8	9/16-18	6.4	18	29.1	9.9	36.6	16.2	-906
768LOB _ 10 X 9/16-18	10	9/16-18	7.1	18	29.7	9.9	37.3	17.2	-906
768LOB _ 10 X 3/4-16	10	3/4-16	7.9	22	31.8	11.2	39.4	17.2	-908
768LOB _ 12 X 7/16-20	12	7/16-20	5.2	22	30.5	9.1	40.6	22.8	-904
768LOB _ 12 X 9/16-18	12	9/16-18	7.1	22	29.0	9.9	39.1	22.8	-906
768LOB _ 12 X 3/4-16	12	3/4-16	9.5	22	31.8	11.2	41.9	22.8	-908
768LOB _ 16 X 9/16-18	16	9/16-18	7.1	24	21.2	9.9	31.3	24.4	-906
768LOB _ 25 X 1 1/16-12	25	1 1/16-12	16.7	35	41.2	15.0	53.5	31.3	-912

Designation: Marking LOB on Hex.
*** Per SAE J1926 and MS 16142. See page 78 for mounting dimensions.
** O-rings used are Viton 90 Durometer. Other O-ring materials are available on request.

“**D**” - Dimension is minimum opening. Dimensions are for reference only, and are subject to change without notice.

Cont’d next page

768 LOB
MALE CONNECTOR

(Cont'd)

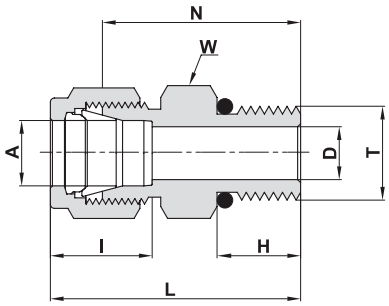

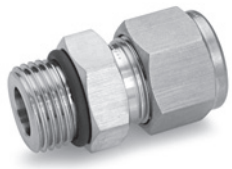

SAE/MS STRAIGHT THREAD BOSS***

Ordering Information	A Tube O.D.		T Straight Thread UN	D		W Hex. Flat	N		H		L		I		O-RING**
	inch	mm	inch	inch	mm	inch	inch	mm	inch	mm	inch	mm	inch	mm	
768LOB _ 1/8 X 5/16-24	1/8	3.17	5/16-24	.09	2.28	7/16	.92	23.37	.30	7.62	1.18	29.97	.50	12.7	-902
768LOB _ 1/8 X 7/16-20	1/8	3.17	7/16-20	.09	2.28	9/16	.98	24.89	.36	9.14	1.24	31.50	.50	12.7	-904
768LOB _ 1/8 X 9/16-18	1/8	3.17	9/16-18	.09	2.28	11/16	1.05	26.67	.39	9.90	1.31	33.27	.50	12.7	-906
768LOB _ 1/4 X 5/16-24	1/4	6.35	5/16-24	.09	2.28	9/16	.92	23.37	.30	7.62	1.21	30.73	.60	15.2	-902
768LOB _ 1/4 X 7/16-20	1/4	6.35	7/16-20	.19	4.82	9/16	1.05	26.67	.36	9.14	1.34	34.03	.60	15.2	-904
768LOB _ 1/4 X 9/16-18	1/4	6.35	9/16-18	.19	4.82	11/16	1.11	28.19	.39	9.90	1.40	35.56	.60	15.2	-906
768LOB _ 1/4 X 3/4 -16	1/4	6.35	3/4 -16	.19	4.82	7/8	1.19	30.20	.44	11.17	1.48	37.59	.60	15.2	-908
768LOB _ 1/4 X 7/8-14	1/4	6.35	7/8-14	.19	4.82	1	1.31	33.27	.50	12.70	1.60	40.64	.60	15.2	-910
768LOB _ 5/16 X 1/2-20	5/16	7.93	1/2-20	.25	6.40	5/8	1.08	27.43	.36	9.14	1.37	34.80	.64	16.2	-905
768LOB _ 3/8 X 7/16-20	3/8	9.52	7/16-20	.20	5.10	5/8	1.11	28.19	.36	9.14	1.40	35.56	.66	16.8	-904
768LOB _ 3/8 X 9/16-18	3/8	9.52	9/16-18	.28	7.11	11/16	1.17	29.71	.39	9.90	1.46	37.02	.66	16.8	-906
768LOB _ 3/8 X 3/4 -16	3/8	9.52	3/4 -16	.28	7.11	7/8	1.25	31.75	.44	11.17	1.54	39.11	.66	16.8	-908
768LOB _ 3/8 X 7/8-14	3/8	9.52	7/8-14	.28	7.11	1	1.37	34.80	.50	12.70	1.66	42.16	.66	16.8	-910
768LOB _ 1/2 X 9/16-18	1/2	12.70	9/16-18	.28	7.11	13/16	1.14	28.95	.39	9.90	1.54	39.11	.90	22.9	-906
768LOB _ 1/2 X 3/4 -16	1/2	12.70	3/4 -16	.41	10.41	7/8	1.25	31.75	.44	11.17	1.65	41.91	.90	22.9	-908
768LOB _ 1/2 X 7/8-14	1/2	12.70	7/8-14	.41	10.41	1	1.37	34.80	.50	12.70	1.77	44.96	.90	22.9	-910
768LOB _ 1/2 X 1 1/16-12	1/2	12.70	1 1/16-12	.41	10.41	1 1/4	1.53	38.86	.59	14.98	1.93	49.02	.90	22.9	-912
768LOB _ 5/8 X 3/4 -16	5/8	15.87	3/4 -16	.42	10.66	15/16	1.25	31.75	.44	11.17	1.65	41.91	.96	22.4	-908
768LOB _ 5/8 X 7/8 -14	5/8	15.87	7/8 -14	.50	12.70	1	1.38	35.05	.50	12.70	1.78	45.21	.96	22.4	-910
768LOB _ 3/4 X 3/4 -16	3/4	19.05	3/4 -16	.42	10.66	1 1/16	1.41	35.81	.44	11.17	1.81	46.0	.96	22.4	-908
768LOB _ 3/4 X 1 1/16 -12	3/4	19.05	1 1/16 -12	.62	15.74	1 1/4	1.53	38.86	.59	14.98	1.93	49.02	.96	22.4	-912
768LOB _ 3/4 X 1 5/16-12	3/4	19.05	1 5/16-12	.62	15.74	1 1/2	1.66	42.16	.59	14.98	2.06	52.32	1.02	25.9	-916
768LOB _ 7/8 X 1 3/16 -12	7/8	22.22	1 3/16 -12	.72	18.29	1 3/8	1.53	38.86	.59	14.98	1.93	49.02	1.02	25.9	-914
768LOB _ 1 X 1 1/16 -12	1	25.40	1 1/16 -12	.66	16.76	1 3/8	1.62	41.20	.59	14.98	2.10	53.34	1.23	31.2	-912
768LOB _ 1 X 1 5/16 -12	1	25.40	1 5/16 -12	.88	22.35	1 1/2	1.66	42.16	.59	14.98	2.14	54.35	1.23	31.2	-916
768LOB _ 1 1/4 X 1 5/8 -12	*1 1/4	31.75	1 5/8 -12	1.09	27.70	1 7/8	1.82	46.23	.59	15.10	2.69	68.33	1.62	41.2	-920
768LOB _ 1 1/2 X 1 7/8 -12	*1 1/2	38.10	1 7/8 -12	1.34	34.00	2 1/8	1.99	50.55	.59	15.10	3.06	77.72	1.97	50.0	-924
768LOB _ 2 X 2 1/2 -12	*2	50.80	2 1/2 -12	1.81	45.97	2 3/4	2.53	64.26	.59	15.10	4.00	101.60	2.66	67.6	-932

Designation: Marking LOB on Hex.

*** Per SAE J1926 and MS 16142. See page 78 for mounting dimensions.

** O-rings used are Viton 90 Durometer. Other O-ring materials are available on request.

* Including low friction paste, See page 89

"**D**" - Dimension is minimum opening. Dimensions are for reference only, and are subject to change without notice.

768 LOP
MALE CONNECTOR

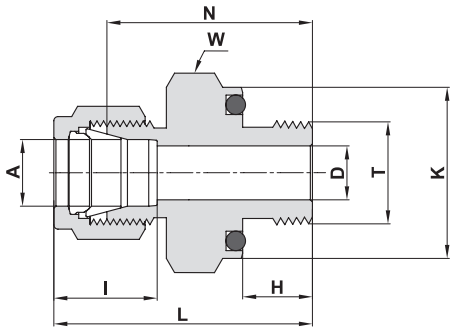

O-SEAL NPT TAPERED THREAD

Ordering Information	A Tube O.D.		T (NPT) Short	D Hex. Flat		K		W Hex. Flat	N		H		L		I		O-RING**
	inch	mm	inch	inch	mm	inch	mm	inch	inch	mm	inch	mm	inch	mm	inch	mm	
768LOP _ 1/8 X 1/8	1/8	3.17	1/8	.09	2.28	.74	18.79	3/4	1.03	26.16	.28	7.11	1.29	32.76	.50	12.7	-111
768LOP _ 1/4 X 1/8	1/4	6.35	1/8	.19	4.82	.74	18.79	3/4	1.09	27.70	.28	7.11	1.38	35.05	.60	15.2	-111
768LOP _ 1/4 X 1/4	1/4	6.35	1/4	.19	4.82	.93	23.62	15/16	1.22	31.00	.38	9.65	1.51	38.40	.60	15.2	-113
768LOP _ 3/8 X 1/4	3/8	9.52	1/4	.28	7.11	.93	23.62	15/16	1.28	32.51	.38	9.65	1.57	39.88	.66	16.8	-113
768LOP _ 3/8 X 3/8	3/8	9.52	3/8	.28	7.11	1.12	28.45	1 1/8	1.34	34.04	.41	10.41	1.63	41.40	.66	16.8	-116
768LOP _ 3/8 X 1/2	3/8	9.52	1/2	.28	7.11	1.30	33.02	1 5/16	1.56	39.62	.53	13.46	1.85	46.99	.66	16.8	-212
768LOP _ 1/2 X 1/2	1/2	12.70	1/2	.41	10.41	1.30	33.02	1 5/16	1.56	39.62	.53	13.46	1.96	49.78	.90	22.9	-212

Designation: Marking LOP on Hex.
** O-rings used are BUNA 70 Durometer.

768 LO
MALE CONNECTOR

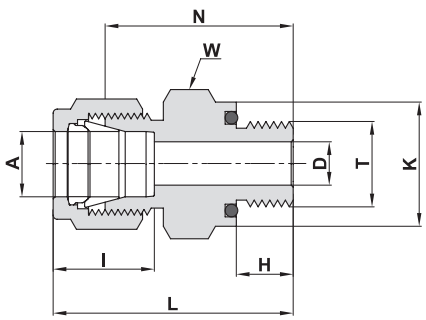

O-SEAL MALE UN THREAD

Ordering Information	A Tube O.D.		T Straight Thread UN	D		K		W Hex. Flat	N		H		L		I		O-RING**
	inch	mm	inch	inch	mm	inch	mm	inch	inch	mm	inch	mm	inch	mm	inch	mm	
768LO _ 1/16 X 5/16-24	1/16	1.58	5/16-24	.05	1.27	.55	14.0	9/16	.90	22.86	.34	8.63	1.05	26.67	.34	8.6	-011
768LO _ 1/8 X 5/16-24	1/8	3.17	5/16-24	.09	2.28	.55	14.0	9/16	1.03	26.20	.34	8.63	1.29	32.77	.50	12.7	-011
768LO _ 3/16 X 3/8 -24	3/16	4.76	3/8 -24	.12	3.04	.62	15.75	5/8	1.09	27.70	.38	9.65	1.35	34.29	.54	12.7	-012
768LO _ 1/4 X 7/16-20	1/4	6.35	7/16-20	.19	4.82	.74	18.80	3/4	1.22	31.00	.41	10.41	1.51	38.35	.60	15.2	-111
768LO _ 5/16 X 1/2 -20	5/16	7.93	1/2 -20	.25	6.35	.86	21.84	7/8	1.31	33.30	.44	11.17	1.60	40.64	.64	16.2	-112
768LO _ 3/8 X 9/16-18	3/8	9.52	9/16-18	.28	7.11	.93	23.62	15/16	1.38	35.05	.47	11.93	1.67	40.89	.66	16.8	-113
768LO _ 1/2 X 3/4 -16	1/2	12.70	3/4 -16	.41	10.41	1.12	28.45	1 1/8	1.41	35.81	.47	11.93	1.81	45.77	.90	22.9	-116
768LO _ 3/4 X 1 1/16-12	3/4	19.05	1 1/16-12	.62	15.74	1.49	37.85	1 1/2	1.66	42.20	.56	14.22	2.06	52.32	.96	24.4	-215
768LO _ 1 X 1 5/16-12	1	25.40	1 5/16-12	.88	22.35	1.74	44.20	1 3/4	1.81	45.97	.56	14.22	2.29	58.17	1.23	32.2	-219

Designation: Marking LO on Hex.
** O-rings used are BUNA 70 Durometer.

"**D**" - Dimension is minimum opening. Dimensions are for reference only, and are subject to change without notice.

768 LN

MALE PIPE WELD CONNECTOR

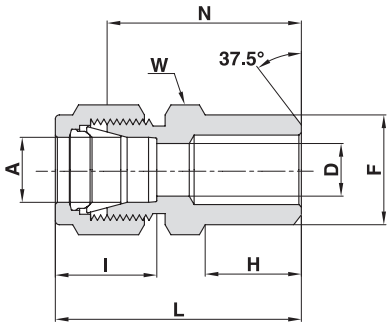

TUBE (METRIC)

Ordering Information	A Tube O.D.	F Pipe Size		D	W Hex. Flat	N	H	L	I
	mm	inch	mm	mm	mm	mm	mm	mm	mm
768LN _ 3 X 1/8	3	1/8	10.30	2.4	12	23.9	9.7	30.5	12.9
768LN _ 4 X 1/8	4	1/8	10.30	2.4	12	24.6	9.7	31.2	13.7
768LN _ 6 X 1/8	6	1/8	10.30	4.8	14	25.4	9.7	32.8	15.3
768LN _ 6 X 1/4	6	1/4	13.70	4.8	14	30.5	14.2	37.9	15.3
768LN _ 8 X 1/8	8	1/8	10.30	5.1	15	26.7	9.7	34.2	16.2
768LN _ 8 X 1/4	8	1/4	13.70	6.4	15	31.2	14.2	38.7	16.2
768LN _ 8 X 1/2	8	1/2	21.34	6.4	22	38.1	19.0	45.6	16.2
768LN _ 10 X 1/4	10	1/4	13.70	7.1	18	33.3	14.2	40.9	17.2
768LN _ 10 X 3/8	10	3/8	17.10	7.9	18	33.3	14.2	40.9	17.2
768LN _ 10 X 1/2	10	1/2	21.34	7.9	22	38.9	19.0	46.5	17.2
768LN _ 12 X 1/4	12	1/4	13.70	7.1	22	33.3	14.2	43.4	22.8
768LN _ 12 X 3/8	12	3/8	17.10	9.5	22	33.3	14.2	43.4	22.8
768LN _ 12 X 1/2	12	1/2	21.34	9.5	22	38.9	19.0	49.0	22.8
768LN _ 12 X 3/4	12	3/4	26.67	9.5	27	40.4	19.0	50.5	22.8
768LN _ 14 X 3/8	14	3/8	17.10	10.4	24	34.0	14.2	44.1	24.4
768LN _ 15 X 1/2	15	1/2	21.34	11.9	24	38.9	19.0	49.0	24.4
768LN _ 16 X 1/2	16	1/2	21.34	12.7	24	38.9	19.0	49.0	24.4
768LN _ 18 X 1/2	18	1/2	21.34	13.5	27	40.4	19.0	50.5	24.4
768LN _ 38 X 1 1/2	*38	1 1/2	48.30	33.7	55	64.0	26.2	91.2	49.4

Designation: Marking LN on Hex.

* Including low friction paste, See page 89

"**D**" - Dimension is minimum opening. Dimensions are for reference only, and are subject to change without notice.

Cont'd next page

768 LN
MALE PIPE WELD CONNECTOR

(Cont'd)

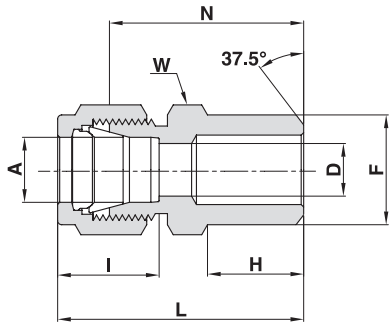

TUBE (INCH)															
Ordering Information	A Tube O.D.		F Pipe Size		D		W Hex. Flat	N		H		L		I	
	inch	mm	inch	mm	inch	mm	inch	inch	mm	inch	mm	inch	mm	inch	mm
768LN _ 1/8 X 1/8	1/8	3.17	1/8	10.30	.09	2.28	7/16	.94	23.88	.38	9.65	1.20	30.48	.50	12.7
768LN _ 3/16 X 1/8	3/16	4.76	1/8	10.30	.12	3.04	7/16	.97	24.60	.38	9.65	1.23	31.25	.54	13.7
768LN _ 1/4 X 1/8	1/4	6.35	1/8	10.30	.19	4.82	1/2	1.00	25.40	.38	9.65	1.29	32.77	.60	15.2
768LN _ 1/4 X 1/4	1/4	6.35	1/4	13.70	.19	4.82	9/16	1.20	30.48	.56	14.22	1.49	37.85	.60	15.2
768LN _ 5/16 X 1/8	5/16	7.93	1/8	10.30	.20	5.08	9/16	1.05	26.67	.38	9.65	1.34	34.04	.64	16.2
768LN _ 5/16 X 1/4	5/16	7.93	1/4	13.70	.25	6.35	9/16	1.23	31.24	.56	14.22	1.52	38.61	.64	16.2
768LN _ 3/8 X 1/4	3/8	9.52	1/4	13.70	.28	7.11	5/8	1.28	32.51	.56	14.22	1.57	39.87	.66	16.8
768LN _ 3/8 X 3/8	3/8	9.52	3/8	17.10	.28	7.11	11/16	1.28	32.51	.56	14.22	1.57	39.87	.66	16.8
768LN _ 3/8 X 1/2	3/8	9.52	1/2	21.34	.28	7.11	7/8	1.53	38.86	.75	19.05	1.82	46.22	.66	16.8
768LN _ 3/8 X 3/4	3/8	9.52	3/4	26.67	.28	7.11	1 1/16	1.59	40.38	.75	19.05	1.88	47.75	.66	16.8
768LN _ 1/2 X 3/8	1/2	12.70	3/8	17.10	.41	10.41	13/16	1.31	33.27	.56	14.22	1.71	44.43	.90	22.9
768LN _ 1/2 X 1/2	1/2	12.70	1/2	21.34	.41	10.41	7/8	1.53	38.86	.75	19.05	1.93	49.00	.90	22.9
768LN _ 1/2 X 3/4	1/2	12.70	3/4	26.67	.41	10.41	1 1/16	1.59	40.40	.75	19.05	1.99	50.55	.90	22.9
768LN _ 1/2 X 1	1/2	12.70	1	33.40	.41	10.41	1 3/8	1.87	47.50	.94	23.87	2.27	57.65	.90	22.9
768LN _ 5/8 X 1/2	5/8	15.87	1/2	21.34	.50	12.70	15/16	1.53	38.86	.75	19.05	1.93	49.02	.96	24.4
768LN _ 3/4 X 1/2	3/4	19.05	1/2	21.34	.53	13.46	1 1/16	1.53	38.86	.75	19.05	1.93	49.00	.96	24.4
768LN _ 3/4 X 3/4	3/4	19.05	3/4	26.67	.62	15.74	1 1/16	1.59	40.40	.75	19.05	1.99	50.55	.96	24.4
768LN _ 1 X 1	1	25.40	1	33.40	.88	22.35	1 3/8	1.97	50.03	.94	23.87	2.45	62.23	1.23	31.2
768LN _ 1 1/4 X 1 1/4	*1 1/4	31.75	1 1/4	42.16	1.09	27.70	1 3/4	2.17	55.12	.94	23.88	3.04	77.22	1.62	41.2
768LN _ 1 1/2 X 1 1/2	*1 1/2	38.10	1 1/2	48.26	1.34	34.00	2 1/8	2.43	61.72	1.03	26.16	3.50	88.90	1.97	50.0
768LN _ 2 X 2	*2	50.80	2	60.33	1.81	45.97	2 3/4	3.00	76.20	1.06	26.92	4.47	113.34	2.66	67.6

Designation: Marking LN on Hex.

768 LW
TUBE SOCKET WELD UNION

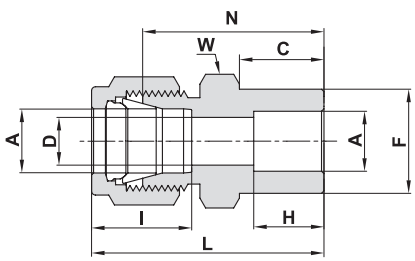

TUBE (INCH)																	
Ordering Information	A Tube O.D.		C		D		W Hex. Flat	F		H		I		L		N	
	inch	mm	inch	mm	inch	mm	inch	inch	mm	inch	mm	inch	mm	inch	mm	inch	mm
768LW _ 1/8 X 1/8	1/8	3.17	.34	8.64	.09	2.28	7/16	.31	7.87	.25	6.35	.50	12.70	1.14	28.96	.88	22.35
768LW _ 1/4 X 1/4	1/4	6.35	.41	10.41	.19	4.80	1/2	.44	11.18	.31	7.90	.60	15.20	1.32	33.53	1.03	26.16
768LW _ 3/8 X 3/8	3/8	9.52	.47	11.94	.28	7.10	5/8	.62	15.75	.38	9.65	.66	16.80	1.48	37.60	1.19	30.23
768LW _ 1/2 X 1/2	1/2	12.70	.47	11.94	.41	10.40	13/16	.75	19.05	.50	12.70	.90	22.90	1.62	41.15	1.22	31.00
768LW _ 3/4 X 3/4	3/4	19.05	.47	11.94	.62	15.80	1 1/16	1.05	26.67	.56	14.20	.96	24.40	1.71	43.43	1.31	33.28
768LW _ 1 X 1	1	25.40	.56	14.22	.88	22.35	1 3/8	1.36	34.54	.75	19.05	1.23	31.20	2.07	52.58	1.59	40.40

Designation: Marking LW on Hex.

"**D**" - Dimension is minimum opening. Dimensions are for reference only, and are subject to change without notice.

769 L

MALE ELBOW

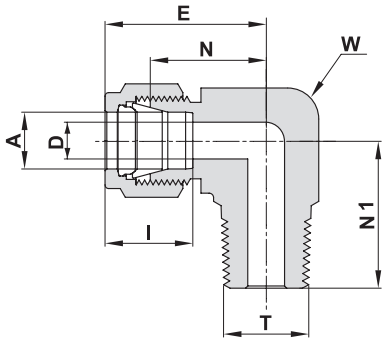

TUBE (METRIC) MALE NPT THREAD

Ordering Information	A Tube O.D.	T (NPT)	D	W Wrench Flat		N	E	N1	I
	mm	inch	mm	inch	mm	mm	mm	mm	mm
769L _ 3 X 1/8	3	1/8	2.4	7/16	11.1	17.0	23.6	17.8	12.9
769L _ 3 X 1/4	3	1/4	2.4	1/2	12.7	18.0	24.6	23.4	12.9
769L _ 4 X 1/8	4	1/8	2.4	1/2	12.7	18.8	25.4	18.8	13.7
769L _ 4 X 1/4	4	1/4	2.4	1/2	12.7	18.8	25.4	23.4	13.7
769L _ 6 X 1/8	6	1/8	4.8	1/2	12.7	19.6	27.0	18.8	15.3
769L _ 6 X 1/4	6	1/4	4.8	1/2	12.7	19.6	27.0	23.4	15.3
769L _ 6 X 3/8	6	3/8	4.8	11/16	17.5	22.4	29.8	26.2	15.3
769L _ 6 X 1/2	6	1/2	4.8	13/16	20.6	24.4	31.8	33.0	15.3
769L _ 8 X 1/8	8	1/8	4.8	9/16	14.3	21.3	28.8	19.8	16.2
769L _ 8 X 1/4	8	1/4	6.4	9/16	14.3	21.3	28.8	24.4	16.2
769L _ 8 X 3/8	8	3/8	6.4	11/16	17.5	23.1	30.6	26.2	16.2
769L _ 8 X 1/2	8	1/2	6.4	13/16	20.6	25.1	32.6	33.0	16.2
769L _ 10 X 1/8	10	1/8	4.8	11/16	17.5	23.9	31.5	21.6	17.2
769L _ 10 X 1/4	10	1/4	7.1	11/16	17.5	23.9	31.5	26.2	17.2
769L _ 10 X 3/8	10	3/8	7.9	11/16	17.5	23.9	31.5	26.2	17.2
769L _ 10 X 1/2	10	1/2	7.9	13/16	20.6	25.9	33.5	33.0	17.2
769L _ 12 X 1/8	12	1/8	4.8	13/16	20.6	25.9	36.0	23.6	22.8
769L _ 12 X 1/4	12	1/4	7.1	13/16	20.6	25.9	36.0	28.2	22.8
769L _ 12 X 3/8	12	3/8	9.5	13/16	20.6	25.9	36.0	28.2	22.8
769L _ 12 X 1/2	12	1/2	9.5	13/16	20.6	25.9	36.0	33.0	22.8
769L _ 12 X 3/4	12	3/4	9.5	1 1/16	27.0	29.7	39.8	36.8	22.8
769L _ 15 X 1/2	15	1/2	11.9	15/16	23.8	27.9	38.0	35.1	24.4
769L _ 16 X 3/8	16	3/8	9.5	15/16	23.8	27.9	38.0	30.2	24.4
769L _ 16 X 1/2	16	1/2	11.9	15/16	23.8	27.9	38.0	35.1	24.4
769L _ 16 X 3/4	16	3/4	12.7	1 1/16	27.0	29.7	39.8	36.8	24.4
769L _ 18 X 1/2	18	1/2	11.9	1 1/16	27.0	29.7	39.8	36.8	24.4
769L _ 18 X 3/4	18	3/4	15.1	1 1/16	27.0	29.7	39.8	36.8	24.4
769L _ 20 X 1/2	20	1/2	11.9	1 3/8	34.9	34.5	44.6	41.7	26.0
769L _ 20 X 3/4	20	3/4	15.9	1 3/8	34.9	34.5	44.6	41.7	26.0
769L _ 22 X 3/4	22	3/4	15.9	1 3/8	34.9	34.5	44.6	41.7	26.0
769L _ 22 X 1	22	1	18.3	1 3/8	34.9	34.5	44.6	46.5	26.0
769L _ 25 X 3/4	25	3/4	15.9	1 3/8	34.9	36.8	49.1	41.7	31.3
769L _ 25 X 1	25	1	21.8	1 3/8	34.9	36.8	49.1	46.5	31.3
769L _ 38 X 1 1/2	*38	1 1/2	33.7	-	55.0	56.4	84.0	60.4	49.4

* Including low friction paste, See page 89

"**D**" - Dimension is minimum opening. Dimensions are for reference only, and are subject to change without notice.

769 L

MALE ELBOW

(Cont'd)

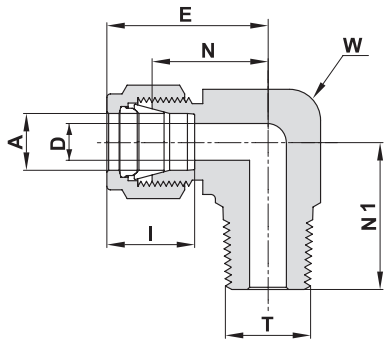

TUBE (INCH) MALE NPT THREAD

Ordering Information	A Tube O.D.		T (NPT)	D		W Wrench Flat		N		E		N1		I	
	inch	mm	inch	inch	mm	inch	mm	inch	mm	inch	mm	inch	mm	inch	mm
769L _ 1/16 X 1/16	1/16	1.58	1/16	.05	1.27	7/16	11.1	.60	15.24	.75	19.05	.70	17.78	.34	8.6
769L _ 1/16 X 1/8	1/16	1.58	1/8	.05	1.27	7/16	11.1	.60	15.24	.75	19.05	.70	17.78	.34	8.6
769L _ 1/8 X 1/16	1/8	3.17	1/16	.09	2.28	7/16	11.1	.67	17.02	.93	23.62	.70	17.78	.50	12.7
769L _ 1/8 X 1/8	1/8	3.17	1/8	.09	2.28	7/16	11.1	.67	17.02	.93	23.62	.70	17.78	.50	12.7
769L _ 1/8 X 1/4	1/8	3.17	1/4	.09	2.28	1/2	12.7	.71	18.03	.97	24.64	.92	23.37	.50	12.7
769L _ 3/16 X 1/8	3/16	4.76	1/8	.12	3.04	1/2	12.7	.74	18.80	1.00	25.40	.74	18.80	.54	13.7
769L _ 3/16 X 1/4	3/16	4.76	1/4	.12	3.04	1/2	12.7	.74	18.80	1.00	25.40	.92	23.37	.54	13.7
769L _ 1/4 X 1/16	1/4	6.35	1/16	.12	3.04	1/2	12.7	.77	19.56	1.06	26.92	.74	18.80	.60	15.2
769L _ 1/4 X 1/8	1/4	6.35	1/8	.19	4.82	1/2	12.7	.77	19.56	1.06	26.92	.74	18.80	.60	15.2
769L _ 1/4 X 1/4	1/4	6.35	1/4	.19	4.82	1/2	12.7	.77	19.56	1.06	26.92	.92	23.37	.60	15.2
769L _ 1/4 X 3/8	1/4	6.35	3/8	.19	4.82	11/16	17.5	.88	22.35	1.17	29.71	1.03	26.16	.60	15.2
769L _ 1/4 X 1/2	1/4	6.35	1/2	.19	4.82	13/16	20.6	.96	24.38	1.25	31.75	1.30	33.02	.60	15.2
769L _ 5/16 X 1/8	5/16	7.93	1/8	.19	4.82	9/16	14.3	.84	21.34	1.13	28.70	.78	19.81	.64	16.2
769L _ 5/16 X 1/4	5/16	7.93	1/4	.25	6.35	9/16	14.3	.84	21.34	1.13	28.70	.96	24.38	.64	16.2
769L _ 5/16 X 3/8	5/16	7.93	3/8	.25	6.35	11/16	17.5	.91	23.11	1.20	30.48	1.03	26.16	.64	16.2
769L _ 3/8 X 1/8	3/8	9.52	1/8	.19	4.82	5/8	15.9	.91	23.11	1.20	30.48	.82	20.83	.66	16.8
769L _ 3/8 X 1/4	3/8	9.52	1/4	.28	7.11	5/8	15.9	.91	23.11	1.20	30.48	1.00	25.40	.66	16.8
769L _ 3/8 X 3/8	3/8	9.52	3/8	.28	7.11	11/16	17.5	.94	23.87	1.23	31.24	1.03	26.16	.66	16.8
769L _ 3/8 X 1/2	3/8	9.52	1/2	.28	7.11	13/16	20.6	1.02	25.90	1.31	33.28	1.30	33.02	.66	16.8
769L _ 3/8 X 3/4	3/8	9.52	3/4	.28	7.11	1 1/16	27.0	1.17	29.71	1.46	37.08	1.45	36.83	.66	16.8
769L _ 1/2 X 1/4	1/2	12.70	1/4	.28	7.11	13/16	20.6	1.02	25.90	1.42	36.07	1.11	28.19	.90	22.9
769L _ 1/2 X 3/8	1/2	12.70	3/8	.38	9.50	13/16	20.6	1.02	25.90	1.42	36.07	1.11	28.19	.90	22.9
769L _ 1/2 X 1/2	1/2	12.70	1/2	.41	10.41	13/16	20.6	1.02	25.90	1.42	36.07	1.30	33.02	.90	22.9
769L _ 1/2 X 3/4	1/2	12.70	3/4	.41	10.41	1 1/16	27.0	1.17	29.71	1.57	39.88	1.45	36.83	.90	22.9
769L _ 5/8 X 3/8	5/8	15.87	3/8	.38	9.61	15/16	23.8	1.10	27.94	1.50	38.10	1.19	30.23	.96	24.4
769L _ 5/8 X 1/2	5/8	15.87	1/2	.47	11.94	15/16	23.8	1.10	27.94	1.50	38.10	1.38	35.05	.96	24.4
769L _ 5/8 X 3/4	5/8	15.87	3/4	.50	12.70	1 1/16	27.0	1.17	29.71	1.57	39.88	1.45	36.83	.96	24.4
769L _ 3/4 X 1/2	3/4	19.05	1/2	.47	11.94	1 1/16	27.0	1.17	29.71	1.57	39.88	1.45	36.83	.96	24.4
769L _ 3/4 X 3/4	3/4	19.05	3/4	.62	15.74	1 1/16	27.0	1.17	29.71	1.57	39.88	1.45	36.83	.96	24.4
769L _ 7/8 X 3/4	7/8	22.22	3/4	.62	15.74	1 3/8	34.9	1.36	34.54	1.76	44.70	1.64	41.66	1.02	25.9
769L _ 1 X 3/4	1	25.40	3/4	.62	15.74	1 3/8	34.9	1.45	36.83	1.93	49.02	1.64	41.66	1.23	31.2
769L _ 1 X 1	1	25.40	1	.86	21.84	1 3/8	34.9	1.45	36.83	1.93	49.02	1.83	46.48	1.23	31.2
769L _ 1 1/4 X 1 1/4	*1 1/4	31.75	1 1/4	1.09	27.70	1 11/16	42.9	1.75	44.45	2.62	66.50	1.88	47.75	1.62	41.2
769L _ 1 1/2 X 1 1/2	*1 1/2	38.10	1 1/2	1.34	34.00	2	50.8	2.00	50.80	3.07	78.00	2.38	60.45	1.97	50.0
769L _ 2 X 2	*2	50.80	2	1.81	45.97	2 3/4	69.9	2.75	69.85	4.22	107.19	2.78	70.61	2.66	67.6

* Including low friction paste, See page 89

"**D**" - Dimension is minimum opening. Dimensions are for reference only, and are subject to change without notice.

769 LR

MALE ELBOW

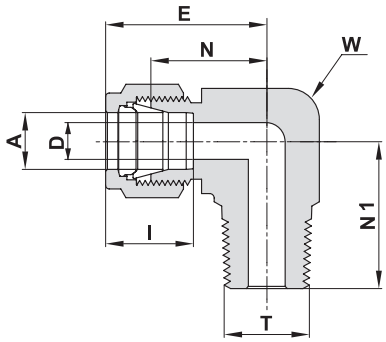

TUBE (METRIC) ISO TAPERED THREAD

Ordering Information	A Tube O.D.	T (ISO)	D	W Wrench Flat		N	E	N1	I
	mm	inch	mm	inch	mm	mm	mm	mm	mm
769LR _ 3 X 1/8	3	R-1/8	2.4	7/16	11.1	17.0	23.6	17.8	12.9
769LR _ 3 X 1/4	3	R-1/4	2.4	1/2	12.7	18.0	24.6	23.4	12.9
769LR _ 4 X 1/8	4	R-1/8	2.4	1/2	12.7	18.8	25.4	18.8	13.7
769LR _ 4 X 1/4	4	R-1/4	2.4	1/2	12.7	18.8	25.4	23.4	13.7
769LR _ 6 X 1/8	6	R-1/8	4.8	1/2	12.7	19.6	27.0	18.8	15.3
769LR _ 6 X 1/4	6	R-1/4	4.8	1/2	12.7	19.6	27.0	23.4	15.3
769LR _ 6 X 3/8	6	R-3/8	4.8	11/16	17.5	22.4	29.8	26.2	15.3
769LR _ 6 X 1/2	6	R-1/2	4.8	13/16	20.6	24.4	31.8	33.0	15.3
769LR _ 8 X 1/8	8	R-1/8	4.8	9/16	14.3	21.3	28.8	19.8	16.2
769LR _ 8 X 1/4	8	R-1/4	6.4	9/16	14.3	21.3	28.8	24.4	16.2
769LR _ 8 X 3/8	8	R-3/8	6.4	11/16	17.5	23.1	30.6	26.2	16.2
769LR _ 8 X 1/2	8	R-1/2	6.4	13/16	20.6	25.1	32.6	33.0	16.2
769LR _ 10 X 1/8	10	R-1/8	4.8	11/16	17.5	23.9	31.5	21.6	17.2
769LR _ 10 X 1/4	10	R-1/4	7.1	11/16	17.5	23.9	31.5	26.2	17.2
769LR _ 10 X 3/8	10	R-3/8	7.9	11/16	17.5	23.9	31.5	26.2	17.2
769LR _ 10 X 1/2	10	R-1/2	7.9	13/16	20.6	25.9	33.5	33.0	17.2
769LR _ 12 X 1/8	12	R-1/8	4.8	13/16	20.6	25.9	36.0	23.6	22.8
769LR _ 12 X 1/4	12	R-1/4	7.1	13/16	20.6	25.9	36.0	28.2	22.8
769LR _ 12 X 3/8	12	R-3/8	9.5	13/16	20.6	25.9	36.0	28.2	22.8
769LR _ 12 X 1/2	12	R-1/2	9.5	13/16	20.6	25.9	36.0	33.0	22.8
769LR _ 12 X 3/4	12	R-3/4	9.5	1 1/16	27.0	29.7	39.8	36.8	22.8
769LR _ 14 X 1/2	14	R-1/2	11.0	15/16	23.8	27.9	38.0	35.0	24.4
769LR _ 15 X 1/2	15	R-1/2	11.9	15/16	23.8	27.9	38.0	35.1	24.4
769LR _ 16 X 3/8	16	R-3/8	9.5	15/16	23.8	27.9	38.0	30.2	24.4
769LR _ 16 X 1/2	16	R-1/2	11.9	15/16	23.8	27.9	38.0	35.1	24.4
769LR _ 18 X 1/2	18	R-1/2	11.9	1 1/16	27.0	29.7	39.8	36.8	24.4
769LR _ 18 X 3/4	18	R-3/4	15.1	1 1/16	27.0	29.7	39.8	36.8	24.4
769LR _ 20 X 1/2	20	R-1/2	11.9	1 3/8	34.9	34.5	44.6	41.7	26.0
769LR _ 20 X 3/4	20	R-3/4	15.9	1 3/8	34.9	34.5	44.6	41.7	26.0
769LR _ 22 X 3/4	22	R-3/4	15.9	1 3/8	34.9	34.5	44.6	41.7	26.0
769LR _ 22 X 1	22	R -1	18.3	1 3/8	34.9	34.5	44.6	46.5	26.0
769LR _ 25 X 3/4	25	R-3/4	15.9	1 3/8	34.9	36.8	49.1	41.7	31.3
769LR _ 25 X 1	25	R -1	21.8	1 3/8	34.9	36.8	49.1	46.5	31.3

Reference Specifications:
DIN - 2999
BS - 21
JIS - B0203
ISO - 7/1-BSP-T

Designation:
Marking LR on Flat

"**D**" - Dimension is minimum opening. Dimensions are for reference only, and are subject to change without notice.

Cont'd next page

769 LR
MALE ELBOW (Cont'd)

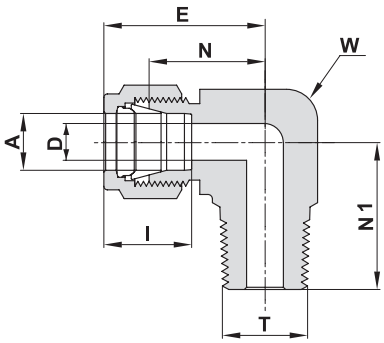

TUBE (INCH) ISO TAPERED THREAD

Ordering Information	A Tube O.D.		T (ISO)	D		W Wrench Flat		N		E		N1		I	
	inch	mm	inch	inch	mm	inch	mm	inch	mm	inch	mm	inch	mm	inch	mm
769LR _ 1/8 X 1/8	1/8	3.17	R-1/8	.09	2.28	7/16	11.1	.67	17.02	.93	23.62	.70	17.78	.50	12.7
769LR _ 1/8 X 1/4	1/8	3.17	R-1/4	.09	2.28	1/2	12.7	.71	18.03	.97	24.64	.92	23.37	.50	12.7
769LR _ 1/4 X 1/8	1/4	6.35	R-1/8	.19	4.82	1/2	12.7	.77	19.56	1.06	26.92	.74	18.80	.60	15.2
769LR _ 1/4 X 1/4	1/4	6.35	R-1/4	.19	4.82	1/2	12.7	.77	19.56	1.06	26.92	.92	23.37	.60	15.2
769LR _ 1/4 X 3/8	1/4	6.35	R-3/8	.19	4.82	11/16	17.5	.88	22.35	1.17	29.71	1.03	26.16	.60	15.2
769LR _ 1/4 X 1/2	1/4	6.35	R-1/2	.19	4.82	13/16	20.6	.96	24.38	1.25	31.75	1.30	33.02	.60	15.2
769LR _ 5/16 X 1/4	5/16	7.93	R-1/4	.25	6.35	9/16	14.3	.84	21.34	1.13	28.70	.96	24.38	.64	16.2
769LR _ 3/8 X 1/8	3/8	9.52	R-1/8	.19	4.82	5/8	15.9	.91	23.11	1.20	30.48	.82	20.83	.66	16.8
769LR _ 3/8 X 1/4	3/8	9.52	R-1/4	.28	7.11	5/8	15.9	.91	23.11	1.20	30.48	1.00	25.40	.66	16.8
769LR _ 3/8 X 3/8	3/8	9.52	R-3/8	.28	7.11	11/16	17.5	.94	23.87	1.23	31.24	1.03	26.16	.66	16.8
769LR _ 1/2 X 1/4	1/2	12.70	R-1/4	.28	7.11	13/16	20.6	1.02	25.90	1.42	36.07	1.11	28.19	.90	22.9
769LR _ 1/2 X 3/8	1/2	12.70	R-3/8	.38	9.50	13/16	20.6	1.02	25.90	1.42	36.07	1.11	28.19	.90	22.9
769LR _ 1/2 X 1/2	1/2	12.70	R-1/2	.41	10.41	13/16	20.6	1.02	25.90	1.42	36.07	1.30	33.02	.90	22.9
769LR _ 3/4 X 1/2	3/4	19.05	R-1/2	.47	11.94	1 1/16	27.0	1.17	29.71	1.57	39.88	1.45	36.83	.96	24.4
769LR _ 1 X 1	1	25.40	R-1	.86	21.84	1 3/8	34.9	1.45	36.83	1.93	49.02	1.83	46.48	1.23	31.2

Reference Specifications:
DIN - 2999
BS - 21
JIS - B0203
ISO - 7/1-BSP-T

Designation:
Marking LR on Flat

769 LN
MALE PIPE WELD ELBOW

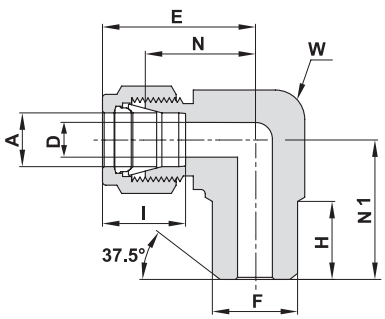

TUBE (INCH)

Ordering Information	A Tube O.D.		F Pipe Size		D		W Wrench Flat		N		H		E		N1		I	
	inch	mm	inch	mm	inch	mm	inch	mm	inch	mm	inch	mm	inch	mm	inch	mm	inch	mm
769LN _ 1/4 X 1/8	1/4	6.35	1/8	10.30	.19	4.82	1/2	12.7	.77	19.56	.38	9.65	1.06	26.92	.74	18.8	.60	15.2
769LN _ 1/4 X 1/4	1/4	6.35	1/4	13.70	.19	4.82	1/2	12.7	.77	19.56	.56	14.22	1.06	26.92	.92	23.37	.60	15.2
769LN _ 3/8 X 1/4	3/8	9.52	1/4	13.70	.28	7.11	5/8	15.9	.91	23.11	.56	14.22	1.20	30.48	1.00	25.40	.66	16.8
769LN _ 1/2 X 1/2	1/2	12.70	1/2	21.34	.41	10.41	13/16	20.6	1.02	25.90	.75	19.05	1.42	36.06	1.30	33.02	.90	22.9
769LN _ 3/4 X 3/4	3/4	19.05	3/4	26.67	.62	15.75	1 1/16	27.0	1.17	29.72	.75	19.05	1.57	39.88	1.45	36.83	.96	24.4

Designation:
Marking LN on Flat

"**D**" - Dimension is minimum opening. Dimensions are for reference only, and are subject to change without notice.

769 LW

TUBE SOCKET WELD ELBOW

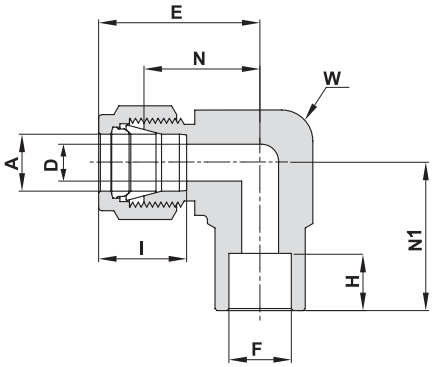

TUBE (INCH)

Ordering Information	A Tube O.D.		F Tube O.D.		D		W Wrench Flat		N		H		E		N1		I	
	inch	mm	inch	mm	inch	mm	inch	mm	inch	mm	inch	mm	inch	mm	inch	mm	inch	mm
769LW _ 1/4 X 1/4	1/4	6.35	1/4	6.35	.19	4.82	1/2	12.7	.77	19.60	.31	7.87	1.06	26.98	.77	19.60	.60	15.2
769LW _ 3/8 X 3/8	3/8	9.52	3/8	9.52	.28	7.11	5/8	15.9	.91	23.11	.38	9.65	1.20	30.98	.91	23.11	.66	16.8
769LW _ 1/2 X 1/2	1/2	12.70	1/2	12.70	.41	10.41	15/16	23.8	1.02	25.90	.50	12.70	1.42	36.06	1.02	25.90	.90	22.9
769LW _ 3/4 X 3/4	3/4	19.05	3/4	19.05	.62	15.74	1 1/16	27.0	1.17	29.71	.56	14.22	1.57	39.87	1.17	29.71	.96	24.4
769LW _ 1 X 1	1	25.40	1	25.40	.88	22.35	1 3/8	34.9	1.45	36.83	.75	19.05	1.93	49.02	1.45	36.83	1.23	31.2

Designation:
Marking LW on Flat

769 LT

REDUCING ELBOW

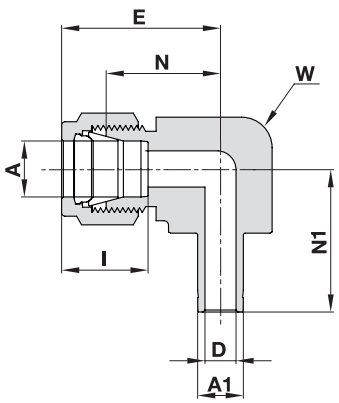

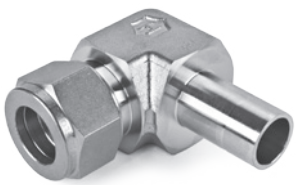

TUBE (METRIC) TO STUB (METRIC)

Ordering Information	A Tube O.D.	A1 Tube O.D.	D	W Wrench Flat		N	E	N1	I
	mm	mm	mm	inch	mm	mm	mm	mm	mm
769LT _ 6 X 6	6	6	4.0	1/2	12.7	19.6	27.0	23.8	15.3
769LT _ 12 X 12	12	12	8.8	1 1/8	28.6	27.9	38.0	40.4	22.8
769LT _ 15 X 15	15	15	12.0	1 1/8	28.6	27.9	38.0	41.0	24.4
769LT _ 22 X 22	22	22	18.3	1 3/8	34.9	34.5	44.6	50.0	26.0

TUBE (INCH) TO STUB (INCH)

Ordering Information	A Tube O.D.		A1 Tube O.D.		D		W Wrench Flat		N		E		N1		I	
	inch	mm	inch	mm	inch	mm	inch	mm	inch	mm	inch	mm	inch	mm	inch	mm
769LT _ 1/4 X 3/8	1/4	6.35	3/8	9.52	.19	4.82	5/8	15.9	.91	23.1	1.20	30.5	1.24	31.5	.60	15.2
769LT _ 1/4 X 1/2	1/4	6.35	1/2	12.7	.19	4.82	5/8	15.9	.91	23.1	1.20	30.5	1.28	32.5	.60	15.2

"**D**" - Dimension is minimum opening. Dimensions are for reference only, and are subject to change without notice.

770 L

FEMALE ELBOW

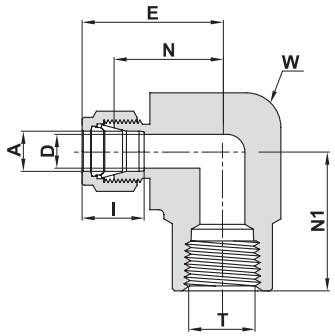

TUBE (METRIC) TO FEMALE NPT THREAD

Ordering Information	A Tube O.D.	T (NPT)	D	W Wrench Flat		N	E	N1	I
	mm	inch	mm	inch	mm	mm	mm	mm	mm
770L _ 6 X 1/8	6	1/8	4.8	1/2	12.7	19.6	27.0	19.0	15.3
770L _ 6 X 1/4	6	1/4	4.8	11/16	17.5	22.4	29.8	22.4	15.3
770L _ 6 X 1/2	6	1/2	4.8	1 1/16	27.0	27.2	34.6	28.4	15.3
770L _ 8 X 1/4	8	1/4	6.4	11/16	17.5	23.1	30.6	22.4	16.2
770L _ 10 X 1/8	10	1/8	7.9	11/16	17.5	23.9	31.5	19.0	17.2
770L _ 10 X 1/4	10	1/4	7.9	13/16	20.6	25.9	33.5	22.4	17.2
770L _ 12 X 1/4	12	1/4	9.5	13/16	20.6	25.9	36.0	22.4	22.8
770L _ 12 X 1/2	12	1/2	9.5	1 1/16	27.0	28.7	38.8	28.4	22.8
770L _ 16 X 1/2	16	1/2	12.7	1 1/16	27.0	29.7	39.8	28.4	24.4

TUBE (INCH) TO FEMALE NPT THREAD

Ordering Information	A Tube O.D.		T (NPT)	D		W Wrench Flat		N		E		N1		I	
	inch	mm	inch	inch	mm	inch	mm	inch	mm	inch	mm	inch	mm	inch	mm
770L _ 1/8 X 1/8	1/8	3.17	1/8	.09	2.28	1/2	12.7	.71	18.03	.97	24.64	.75	19.05	.50	12.7
770L _ 1/8 X 1/4	1/8	3.17	1/4	.09	2.28	11/16	17.5	.82	20.80	1.08	27.43	.88	22.40	.50	12.7
770L _ 3/16 X 1/8	3/16	4.76	1/8	.12	3.04	1/2	12.7	.74	18.80	1.00	25.40	.75	19.05	.54	13.7
770L _ 1/4 X 1/8	1/4	6.35	1/8	.19	4.82	1/2	12.7	.77	19.55	1.06	26.92	.75	19.05	.60	15.2
770L _ 1/4 X 1/4	1/4	6.35	1/4	.19	4.82	11/16	17.5	.88	22.40	1.17	29.72	.88	22.40	.60	15.2
770L _ 1/4 X 3/8	1/4	6.35	3/8	.19	4.82	15/16	23.8	.96	24.38	1.25	31.75	.88	22.40	.60	15.2
770L _ 1/4 X 1/2	1/4	6.35	1/2	.19	4.82	1 1/16	27.0	1.07	27.18	1.36	34.54	1.12	28.45	.60	15.2
770L _ 5/16 X 1/8	5/16	7.93	1/8	.25	6.35	9/16	14.3	.84	21.30	1.13	28.70	.75	19.05	.64	16.2
770L _ 5/16 X 1/4	5/16	7.93	1/4	.25	6.35	11/16	17.5	.91	23.11	1.20	30.48	.88	22.40	.64	16.2
770L _ 3/8 X 1/8	3/8	9.52	1/8	.28	7.11	5/8	15.9	.91	23.11	1.20	30.48	.75	19.05	.66	16.8
770L _ 3/8 X 1/4	3/8	9.52	1/4	.28	7.11	11/16	17.5	0.94	23.87	1.23	31.24	.88	22.40	.66	16.8
770L _ 3/8 X 3/8	3/8	9.52	3/8	.28	7.11	15/16	23.8	1.02	25.90	1.31	33.27	.88	22.40	.66	16.8
770L _ 3/8 X 1/2	3/8	9.52	1/2	.28	7.11	1 1/16	27.0	1.13	28.70	1.42	36.07	1.12	28.45	.66	16.8
770L _ 1/2 X 1/4	1/2	12.70	1/4	.41	10.41	13/16	20.6	1.02	25.90	1.42	36.07	.88	22.40	.90	22.9
770L _ 1/2 X 3/8	1/2	12.70	3/8	.41	10.41	15/16	23.8	1.02	25.90	1.42	36.07	.88	22.40	.90	22.9
770L _ 1/2 X 1/2	1/2	12.70	1/2	.41	10.41	1 1/16	27.0	1.13	28.70	1.53	36.86	1.12	28.45	.90	22.9
770L _ 5/8 X 3/8	5/8	15.87	3/8	.50	12.70	15/16	23.8	1.10	27.90	1.50	38.10	.88	22.40	.96	24.4
770L _ 5/8 X 1/2	5/8	15.87	1/2	.50	12.70	1 1/16	27.0	1.17	29.70	1.57	39.86	1.12	28.45	.96	24.4
770L _ 3/4 X 1/2	3/4	19.05	1/2	.62	15.74	1 1/16	27.0	1.17	29.70	1.57	39.86	1.12	28.45	.96	24.4
770L _ 3/4 X 3/4	3/4	19.05	3/4	.62	15.74	1 3/8	34.9	1.36	34.54	1.76	44.70	1.25	31.75	.96	24.4
770L _ 7/8 X 3/4	7/8	22.22	3/4	.72	18.28	1 3/8	34.9	1.36	34.54	1.76	44.70	1.25	31.75	1.02	25.9
770L _ 1 X 3/4	1	25.40	3/4	.88	22.35	1 3/8	34.9	1.45	36.83	1.93	49.02	1.25	31.75	1.23	31.2
770L _ 1 X 1	1	25.40	1	.88	22.35	1 11/16	42.9	1.63	41.40	2.11	53.59	1.50	38.10	1.23	31.2

"**D**" - Dimension is minimum opening. Dimensions are for reference only, and are subject to change without notice.

771 L

MALE RUN TEE

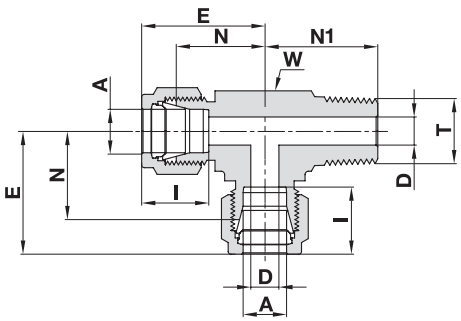

TUBE (METRIC) TO MALE NPT THREAD

Ordering Information	A Tube O.D.	T (NPT)	D	W Wrench Flat		N	E	N1	I
	mm	inch	mm	inch	mm	mm	mm	mm	mm
771L _ 6 X 1/8	6	1/8	4.8	1/2	12.7	19.6	27.0	18.8	15.3
771L _ 6 X 1/4	6	1/4	4.8	1/2	12.7	19.6	27.0	23.4	15.3
771L _ 8 X 1/8	8	1/8	4.8	5/8	15.9	22.4	29.9	20.8	16.2
771L _ 8 X 1/4	8	1/4	6.4	5/8	15.9	22.4	29.9	25.4	16.2
771L _ 10 X 1/4	10	1/4	7.1	13/16	20.6	25.9	33.5	28.2	17.2
771L _ 12 X 1/4	12	1/4	7.1	13/16	20.6	25.9	36.0	28.2	22.8
771L _ 12 X 3/8	12	3/8	9.5	13/16	20.6	25.9	36.0	28.2	22.8
771L _ 12 X 1/2	12	1/2	9.5	13/16	20.6	25.9	36.0	33.0	22.8
771L _ 16 X 1/2	16	1/2	11.9	15/16	23.8	27.9	38.0	35.0	24.4

TUBE (INCH) TO MALE NPT THREAD

Ordering Information	A Tube O.D.		T (NPT)	D		W Wrench Flat		N		E		N1		I	
	inch	mm	inch	inch	mm	inch	mm	inch	mm	inch	mm	inch	mm	inch	mm
771L _ 1/8 X 1/8	1/8	3.17	1/8	.09	2.28	7/16	11.1	.67	17.02	.93	23.62	.70	17.78	.50	12.7
771L _ 1/8 X 1/4	1/8	3.17	1/4	.09	2.28	1/2	12.7	.71	18.03	.97	24.64	.92	23.40	.50	12.7
771L _ 3/16 X 1/8	3/16	4.76	1/8	.12	3.05	7/16	11.1	.70	17.78	.96	24.38	.70	17.78	.54	13.7
771L _ 1/4 X 1/8	1/4	6.35	1/8	.19	4.82	1/2	12.7	.77	19.56	1.06	26.92	.74	18.8	.60	15.2
771L _ 1/4 X 1/4	1/4	6.35	1/4	.19	4.82	1/2	12.7	.77	19.56	1.06	26.92	.92	23.37	.60	15.2
771L _ 5/16 X 1/8	5/16	7.93	1/8	.19	4.82	5/8	15.9	.88	22.35	1.17	29.71	.82	20.83	.64	16.2
771L _ 3/8 X 1/4	3/8	9.52	1/4	.28	7.11	5/8	15.9	.91	23.11	1.20	30.48	1.00	25.40	.66	16.8
771L _ 3/8 X 3/8	3/8	9.52	3/8	.28	7.11	13/16	20.6	1.02	25.91	1.31	33.27	1.11	28.19	.66	16.8
771L _ 1/2 X 3/8	1/2	12.70	3/8	.38	9.5	13/16	20.6	1.02	25.91	1.42	36.07	1.11	28.19	.90	22.9
771L _ 1/2 X 1/2	1/2	12.70	1/2	.41	10.41	13/16	20.6	1.02	25.91	1.42	36.07	1.30	33.00	.90	22.9
771L _ 5/8 X 1/2	5/8	15.87	1/2	.47	11.94	15/16	23.8	1.10	27.94	1.50	38.1	1.38	35.05	.96	24.4
771L _ 3/4 X 3/4	3/4	19.05	3/4	.62	15.75	1 1/8	28.6	1.17	29.72	1.57	39.88	1.45	36.83	.96	24.4

"**D**" - Dimension is minimum opening. Dimensions are for reference only, and are subject to change without notice.

771 LF
FEMALE RUN TEE

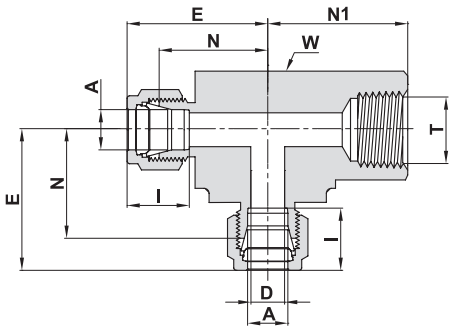

TUBE (METRIC) TO FEMALE NPT THREAD

Ordering Information	A	T (NPT)	D	W Wrench Flat		N	E	N1	I
	mm	inch	mm	inch	mm	mm	mm	mm	mm
771LF _ 6 X 1/8	6	1/8	4.8	5/8	15.9	19.6	27.0	19.0	15.3
771LF _ 6 X 1/4	6	1/4	4.8	13/16	20.6	22.4	29.8	22.4	15.3
771LF _ 8 X 1/8	8	1/8	6.4	5/8	15.9	22.4	29.9	22.4	16.2
771LF _ 8 X 1/4	8	1/4	6.4	13/16	20.6	23.1	30.6	26.0	16.2
771LF _ 10 X 1/4	10	1/4	7.9	13/16	20.6	25.9	33.5	22.4	17.2
771LF _ 12 X 1/4	12	1/4	9.5	13/16	20.6	25.9	36.0	22.4	22.8
771LF _ 12 X 3/8	12	3/8	9.5	15/16	23.8	25.9	36.0	28.2	22.8
771LF _ 12 X 1/2	12	1/2	9.5	1 1/8	28.6	29.7	39.8	28.4	22.8
771LF _ 16 X 1/2	16	1/2	12.7	1 1/8	28.6	29.7	39.8	28.4	24.4

TUBE (INCH) TO FEMALE NPT THREAD

Ordering Information	A Tube O.D.		T (NPT)	D		W Wrench Flat		N		E		N1		I	
	inch	mm	inch	inch	mm	inch	mm	inch	mm	inch	mm	inch	mm	inch	mm
771LF _ 1/8 X 1/8	1/8	3.17	1/8	.09	2.28	5/8	15.9	.71	18.00	.97	24.63	.75	19.05	.50	12.7
771LF _ 1/4 X 1/8	1/4	6.35	1/8	.19	4.82	5/8	15.9	.77	19.55	1.06	26.92	.75	19.05	.60	15.2
771LF _ 1/4 X 1/4	1/4	6.35	1/4	.19	4.82	13/16	20.6	.88	22.35	1.17	29.71	.88	22.35	.60	15.2
771LF _ 3/8 X 1/4	3/8	9.52	1/4	.28	7.11	13/16	20.6	.94	23.87	1.23	31.24	.88	22.35	.66	16.8
771LF _ 1/2 X 3/8	1/2	12.70	3/8	.41	10.41	15/16	23.8	1.02	25.9	1.42	36.07	.88	22.35	.90	22.9
771LF _ 1/2 X 1/2	1/2	12.70	1/2	.41	10.41	1 1/8	28.6	1.17	29.72	1.57	39.88	1.12	28.45	.90	22.9
771LF _ 3/4 X 3/4	3/4	19.05	3/4	.62	15.75	1 3/8	34.9	1.36	34.54	1.76	44.70	1.25	31.75	.96	24.4
771LF _ 1 X 3/4	1	25.4	3/4	.88	22.35	1 3/8	34.9	1.45	36.83	1.93	49.02	1.25	31.75	1.23	31.2
771LF _ 1 X 1	1	25.4	1	.88	22.35	1 11/16	42.9	1.63	41.40	2.11	53.59	1.50	38.10	1.23	31.2

"**D**" - Dimension is minimum opening. Dimensions are for reference only, and are subject to change without notice.

772 L
MALE BRANCH TEE

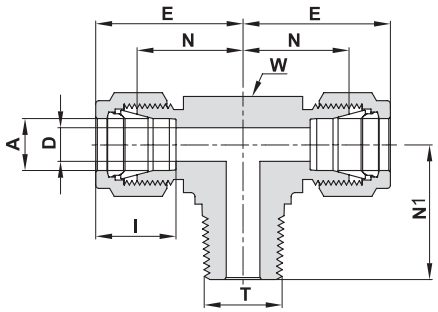

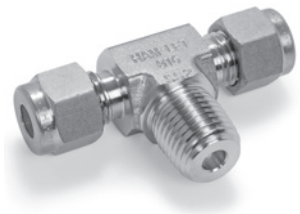

TUBE (METRIC) TO MALE NPT THREAD

Ordering Information	A Tube O.D.	T (NPT)	D	W Wrench Flat		N	E	N1	I
	mm	inch	mm	inch	mm	mm	mm	mm	mm
772L _ 6 X 1/8	6	1/8	4.8	1/2	12.7	19.6	27.0	18.8	15.3
772L _ 6 X 1/4	6	1/4	4.8	1/2	12.7	19.6	27.0	23.4	15.3
772L _ 8 X 1/8	8	1/8	4.8	5/8	15.9	22.4	29.9	20.8	16.2
772L _ 8 X 1/4	8	1/4	6.4	5/8	15.9	22.4	29.9	25.4	16.2
772L _ 10 X 1/4	10	1/4	7.1	13/16	20.6	25.9	33.5	28.2	17.2
772L _ 12 X 1/4	12	1/4	7.1	13/16	20.6	25.9	36.0	28.2	22.8
772L _ 12 X 3/8	12	3/8	9.5	13/16	20.6	25.9	36.0	28.2	22.8
772L _ 12 X 1/2	12	1/2	9.5	13/16	20.6	25.9	36.0	33.0	22.8
772L _ 16 X 1/2	16	1/2	11.9	15/16	23.8	28.7	38.8	35.8	24.4

TUBE (INCH) TO MALE NPT THREAD

Ordering Information	A Tube O.D.		T (NPT)	D		W Wrench Flat		N		E		N1		I	
	inch	mm	inch	inch	mm	inch	mm	inch	mm	inch	mm	inch	mm	inch	mm
772L _ 1/8 X 1/8	1/8	3.17	1/8	.09	2.28	7/16	11.1	.67	17.02	.93	23.62	.70	17.78	.50	12.7
772L _ 1/8 X 1/4	1/8	3.17	1/4	.09	2.28	1/2	12.7	.71	18.03	.97	24.64	.92	23.37	.50	12.7
772L _ 3/16 X 1/8	3/16	4.76	1/8	.12	3.04	7/16	11.1	.70	17.78	.96	24.38	.70	17.78	.54	13.7
772L _ 1/4 X 1/8	1/4	6.35	1/8	.19	4.82	1/2	12.7	.77	19.56	1.06	26.92	.74	18.80	.60	15.2
772L _ 1/4 X 1/4	1/4	6.35	1/4	.19	4.82	1/2	12.7	.77	19.56	1.06	26.92	.92	23.37	.60	15.2
772L _ 5/16 X 1/8	5/16	7.93	1/8	.19	4.82	5/8	15.9	.88	22.35	1.17	29.71	.82	20.83	.64	16.2
772L _ 3/8 X 1/4	3/8	9.52	1/4	.28	7.11	5/8	15.9	.91	23.11	1.20	30.48	1.00	25.40	.66	16.8
772L _ 3/8 X 3/8	3/8	9.52	3/8	.28	7.11	13/16	20.6	1.02	25.91	1.31	33.27	1.11	28.19	.66	16.8
772L _ 1/2 X 3/8	1/2	12.70	3/8	.38	9.65	13/16	20.6	1.02	25.91	1.42	36.07	1.11	28.19	.90	22.9
772L _ 1/2 X 1/2	1/2	12.70	1/2	.41	10.41	13/16	20.6	1.02	25.91	1.42	36.07	1.30	33.02	.90	22.9
772L _ 5/8 X 1/2	5/8	15.87	1/2	.47	11.94	15/16	23.8	1.13	28.7	1.53	38.86	1.41	35.81	.96	24.4
772L _ 3/4 X 3/4	3/4	19.05	3/4	.62	15.75	1 1/8	28.6	1.17	29.72	1.57	39.88	1.45	36.83	.96	24.4

"**D**" - Dimension is minimum opening. Dimensions are for reference only, and are subject to change without notice.

772 LF

FEMALE BRANCH TEE

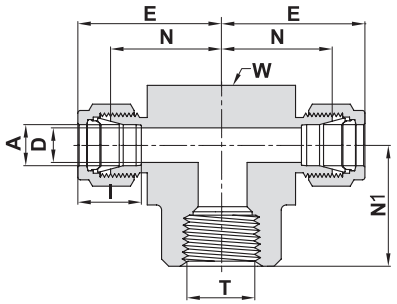

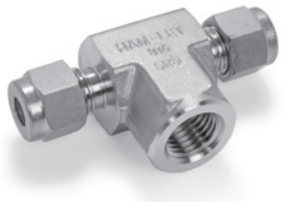

TUBE (METRIC) TO FEMALE NPT THREAD

Ordering Information	A Tube O.D.	T (NPT)	D	W Wrench Flat		N	E	N1	I
	mm	inch	mm	inch	mm	mm	mm	mm	mm
772LF _ 6 X 1/8	6	1/8	4.8	5/8	15.9	19.6	27.0	19.0	15.3
772LF _ 6 X 1/4	6	1/4	4.8	13/16	20.6	22.4	29.8	22.4	15.3
772LF _ 8 X 1/8	8	1/8	6.4	5/8	15.9	22.4	29.9	19.0	16.2
772LF _ 8 X 1/4	8	1/4	6.4	13/16	20.6	23.1	30.6	22.4	16.2
772LF _ 10 X 1/4	10	1/4	7.9	13/16	20.6	25.9	33.5	22.4	17.2
772LF _ 10 X 3/8	10	3/8	7.9	15/16	23.8	25.9	33.5	22.4	17.2
772LF _ 12 X 1/4	12	1/4	9.5	13/16	20.6	25.9	36.0	22.4	22.8
772LF _ 12 X 3/8	12	3/8	9.5	15/16	23.8	25.9	36.0	22.4	22.8
772LF _ 12 X 1/2	12	1/2	9.5	1 1/8	28.6	28.7	38.8	28.4	22.8
772LF _ 16 X 1/2	16	1/2	12.7	1 1/8	28.6	28.7	38.8	28.4	24.4

TUBE (INCH) TO FEMALE NPT THREAD

Ordering Information	A Tube O.D.		T (NPT)	D		W Wrench Flat		N		E		N1		I	
	inch	mm	inch	inch	mm	inch	mm	inch	mm	inch	mm	inch	mm	inch	mm
772LF _ 1/8 X 1/8	1/8	3.17	1/8	.09	2.28	5/8	15.9	.70	18.00	.97	24.64	.75	19.05	.50	12.7
772LF _ 1/4 X 1/8	1/4	6.35	1/8	.19	4.82	5/8	15.9	.77	19.56	1.06	26.96	.75	19.05	.60	15.2
772LF _ 1/4 X 1/4	1/4	6.35	1/4	.19	4.82	13/16	20.6	.88	22.35	1.17	29.71	.88	22.35	.60	15.2
772LF _ 3/8 X 1/4	3/8	9.52	1/4	.28	7.11	13/16	20.6	.94	23.88	1.23	31.24	.88	22.35	.66	16.8
772LF _ 3/8 X 3/8	3/8	9.52	3/8	.28	7.11	15/16	23.8	1.02	25.90	1.31	33.27	.88	22.35	.66	16.8
772LF _ 3/8 X 1/2	3/8	9.52	1/2	.28	7.11	1 1/8	28.6	1.13	28.70	1.42	36.07	1.12	28.45	.66	16.8
772LF _ 1/2 X 1/4	1/2	12.70	1/4	.41	10.41	13/16	20.6	1.02	25.90	1.42	36.07	.88	22.35	.90	22.9
772LF _ 1/2 X 3/8	1/2	12.70	3/8	.41	10.41	15/16	23.8	1.02	25.90	1.42	36.07	.88	22.35	.90	22.9
772LF _ 1/2 X 1/2	1/2	12.70	1/2	.41	10.41	1 1/8	28.6	1.13	28.70	1.53	38.86	1.12	28.45	.90	22.9
772LF _ 5/8 X 1/2	5/8	15.87	1/2	.50	12.70	1 1/8	28.6	1.13	28.70	1.53	38.86	1.12	28.44	.96	24.4
772LF _ 3/4 X 3/4	3/4	19.05	3/4	.62	15.74	1 3/8	34.9	1.36	34.50	1.76	44.70	1.25	31.75	.96	24.4
772LF _ 1 X 3/4	1	25.4	3/4	.88	22.35	1 3/8	34.9	1.45	36.83	1.93	49.02	1.25	31.75	1.23	31.2
772LF _ 1 X 1	1	25.4	1	.88	22.35	1 11/16	42.9	1.63	41.40	2.11	53.60	1.50	38.10	1.23	31.2

"**D**" - Dimension is minimum opening. Dimensions are for reference only, and are subject to change without notice.

774 L

BULKHEAD UNION

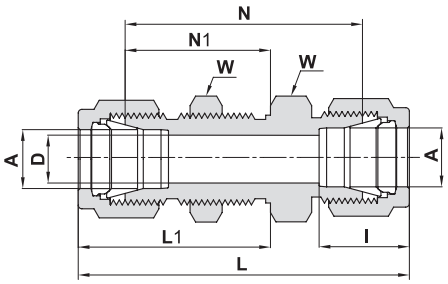

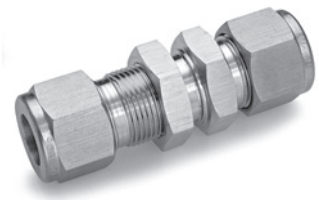

TUBE (METRIC) TO TUBE (METRIC)

Ordering Information	A Tube O.D.	D	W Hex. Flat	N	N1	L	L1	I	Panel hole drill size	Max. Panel thickness
	mm	mm	mm	mm	mm	mm	mm	mm	mm	mm
774L _ 3	3	2.4	14	38.1	24.6	51.3	31.2	12.9	8.30	12.7
774L _ 4	4	2.4	14	40.4	25.4	53.6	32.0	13.7	9.90	12.7
774L _ 6	6	4.8	16	42.9	26.2	57.7	33.6	15.3	11.50	10.2
774L _ 8	8	6.4	18	46.0	28.6	61.0	36.1	16.2	13.10	11.2
774L _ 10	10	7.9	22	48.5	29.4	63.7	37.0	17.2	16.25	11.2
774L _ 12	12	9.5	24	50.8	31.8	71.0	41.9	22.8	19.50	12.7
774L _ 14	14	11.0	27	52.3	32.5	72.5	42.6	24.4	22.80	12.7
774L _ 15	15	11.9	27	52.3	32.5	72.5	42.6	24.4	22.80	12.7
774L _ 16	16	12.7	27	52.3	32.5	72.5	42.6	24.4	22.80	12.7
774L _ 18	18	15.1	30	58.7	37.3	78.9	47.4	24.4	26.00	16.8
774L _ 20	20	15.9	35	64.3	42.9	84.5	53.0	26.0	29.00	19.0
774L _ 25	25	21.8	41	71.4	45.2	96.0	57.5	31.3	33.70	19.0
774L _ 38	*38	33.7	60	89.8	51.9	145.0	79.5	49.4	50.50	19.0

TUBE (INCH) TO TUBE (INCH)

Ordering Information	A Tube O.D.		D		W Hex. Flat	N		N1		L		L1		I		Panel hole drill size		Max. Panel thickness	
	inch	mm	inch	mm	inch	inch	mm	inch	mm	inch	mm	inch	mm	inch	mm	inch	mm	inch	mm
774L _ 1/16	1/16	1.58	.05	1.27	5/16	.94	23.88	.53	13.46	1.24	31.5	.68	17.3	.34	8.6	13/64	5.16	.12	3.05
774L _ 1/8	1/8	3.17	.09	2.28	1/2	1.50	38.10	.97	24.63	2.02	51.30	1.23	31.24	.50	12.7	21/64	8.33	.50	12.70
774L _ 3/16	3/16	4.76	.12	3.04	9/16	1.59	40.38	1.00	25.40	2.11	53.59	1.26	32.00	.54	13.7	25/64	9.92	.50	12.70
774L _ 1/4	1/4	6.35	.19	4.82	5/8	1.69	42.92	1.03	26.16	2.27	57.65	1.32	33.52	.60	15.2	29/64	11.50	.40	10.16
774L _ 5/16	5/16	7.93	.25	6.35	11/16	1.81	45.97	1.12	28.44	2.39	60.70	1.41	35.81	.64	16.2	33/64	13.09	.44	11.17
774L _ 3/8	3/8	9.52	.28	7.11	3/4	1.87	47.5	1.16	29.46	2.45	62.2	1.45	36.83	.66	16.8	37/64	14.68	.44	11.17
774L _ 1/2	1/2	12.70	.41	10.41	15/16	2.00	50.80	1.25	31.75	2.80	71.12	1.65	41.91	.90	22.9	49/64	19.44	.50	12.70
774L _ 5/8	5/8	15.87	.50	12.70	1 1/16	2.06	52.32	1.28	32.51	2.86	72.64	1.68	42.67	.96	24.4	57/64	22.62	.50	12.70
774L _ 3/4	3/4	19.05	.62	15.75	1 3/16	2.31	58.67	1.47	37.33	3.11	78.99	1.87	47.49	.96	24.4	1 1/64	25.79	.66	16.76
774L _ 1	1	25.40	.88	22.35	1 5/8	2.81	71.37	1.78	45.21	3.77	95.76	2.26	57.40	1.23	31.2	1 21/64	33.73	.75	19.05
774L _ 1 1/4	*1 1/4	31.75	1.09	27.70	1 7/8	3.11	79.00	1.88	47.75	4.85	123.19	2.75	69.85	1.62	41.2	1 41/64	41.67	.75	19.05
774L _ 1 1/2	*1 1/2	38.10	1.34	34.00	2 1/4	3.34	84.80	1.94	49.28	5.48	139.19	3.01	76.45	1.97	50.0	1 61/64	49.61	.75	19.05
774L _ 2	*2	50.80	1.81	45.97	2 3/4	4.16	105.66	2.22	56.39	7.10	180.34	3.69	93.73	2.66	67.6	2 41/64	67.07	.75	19.05

* Including low friction paste, See page 89

"**D**" - Dimension is minimum opening. Dimensions are for reference only, and are subject to change without notice.

774 LF
BULKHEAD FEMALE CONNECTOR

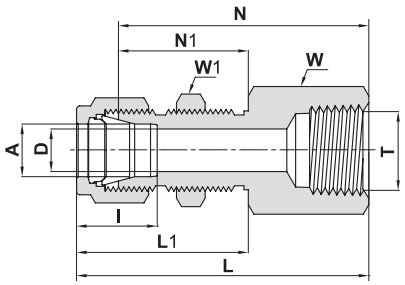

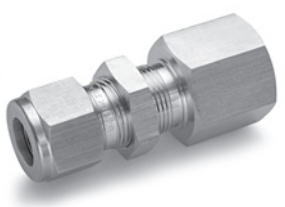

TUBE (METRIC) TO FEMALE NPT THREAD

Ordering Information	A Tube O.D.	T (NPT)	D	W Hex. Flat	W1 Hex. Flat	N	N1	L	L1	I	Panel hole drill size	Max. Panel thickness
	mm	inch	mm	mm	mm	mm	mm	mm	mm	mm	mm	mm
774LF_6 X 1/4	6	1/4	4.8	19	16	44.4	26.2	51.8	33.6	15.3	11.5	10.2
774LF_12 X 1/2	1 2	1/2	9.5	27	24	56.4	31.8	66.5	41.9	22.8	19.5	12.7

TUBE (INCH) TO FEMALE NPT THREAD

Ordering Information	A Tube O.D.		T (NPT)	D		W Hex. Flat	W1 Hex. Flat	N		N1		L		L1		I		Panel hole drill size		Max. Panel thickness	
	inch	mm	inch	inch	mm	inch	inch	inch	mm	inch	mm	inch	mm	inch	mm	inch	mm	inch	mm	inch	mm
774LF_1/8X1/8	1/8	3.17	1/8	.09	2.28	9/16	1/2	1.50	38.10	.97	24.63	1.76	44.70	1.23	31.24	.50	12.7	21/64	8.33	.50	12.70
774LF_1/4X1/8	1/4	6.35	1/8	.19	4.82	5/8	5/8	1.56	39.62	1.03	26.16	1.85	46.99	1.32	33.52	.60	15.2	29/64	11.50	.40	10.16
774LF_1/4X1/4	1/4	6.35	1/4	.19	4.82	3/4	5/8	1.75	44.45	1.03	26.16	2.04	51.81	1.32	33.52	.60	15.2	29/64	11.50	.40	10.16
774LF_3/8X1/4	3/8	9.52	1/4	.28	7.11	3/4	3/4	1.88	47.75	1.16	29.46	2.17	55.11	1.45	36.83	.66	16.8	37/64	14.68	.44	11.17
774LF_1/2X3/8	1/2	12.70	3/8	.41	10.41	15/16	15/16	2.03	51.56	1.25	31.75	2.43	61.72	1.65	41.91	.90	22.9	49/64	19.44	.50	12.70
774LF_1/2X1/2	1/2	12.70	1/2	.41	10.41	1 1/16	15/16	2.22	56.38	1.25	31.75	2.62	66.54	1.65	41.91	.90	22.9	49/64	19.44	.50	12.70

774 LT
BULKHEAD REDUCER

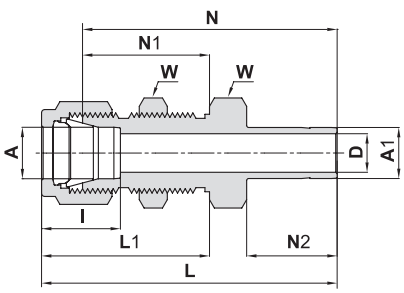

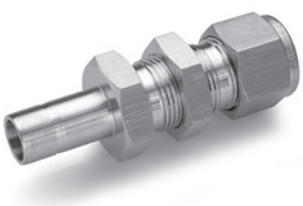

TUBE (INCH) TO TUBE (INCH)

Ordering Information	A Tube O.D.		A1 Tube O.D.	D		W Hex. Flat	N		N1		N2		L		L1		I		Panel hole drill size		Max. Panel thickness	
	inch	mm	inch	inch	mm	inch	inch	mm	inch	mm	inch	mm	inch	mm	inch	mm	inch	mm	inch	mm	inch	mm
774LT_1/8X1/8	1/8	3.17	1/8	.08	2.03	1/2	1.69	42.92	.97	24.63	.53	13.46	1.95	49.53	1.23	31.24	.50	12.7	21/64	8.33	.50	12.70
774LT_1/4X1/4	1/4	6.35	1/4	.17	4.20	5/8	1.91	48.50	1.03	26.16	.62	15.74	2.20	55.88	1.32	33.52	.60	15.2	29/64	11.50	.40	10.16
774LT_3/8X3/8	3/8	9.52	3/8	.28	7.11	3/4	2.12	53.85	1.16	29.46	.69	17.52	2.41	61.21	1.45	36.83	.66	16.8	37/64	14.68	.44	11.17
774LT_1/2X1/2	1/2	12.7	1/2	.39	9.90	15/16	2.47	62.73	1.25	31.75	.91	23.11	2.87	72.89	1.65	41.91	.90	22.9	49/64	19.44	.50	12.70
774LT_5/8X5/8	5/8	15.87	5/8	.50	12.70	1 1/16	2.56	65.02	1.28	32.51	.97	24.64	2.96	75.18	1.68	42.67	.96	24.4	57/64	22.62	.50	12.70
774LT_3/4X3/4	3/4	19.05	3/4	.58	14.73	1 3/4	2.81	71.37	1.47	37.33	.97	24.64	3.21	81.53	1.87	47.49	.96	24.4	1 1/64	25.79	.66	16.76
774LT_1X1	1	25.40	1	.80	20.30	1 5/8	3.47	88.14	1.78	45.21	1.30	33.02	3.95	100.33	2.26	57.40	1.23	31.2	1 21/64	33.73	.75	19.05

"**D**" - Dimension is minimum opening. Dimensions are for reference only, and are subject to change without notice.

774 LM

BULKHEAD MALE CONNECTOR

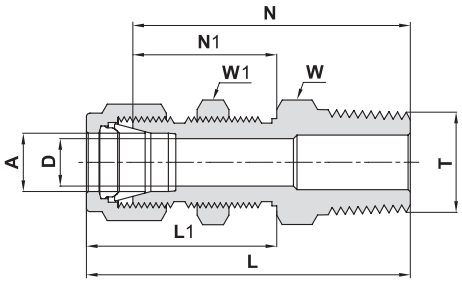

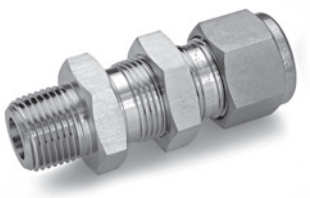

TUBE (METRIC) TO MALE NPT THREAD

Ordering Information	A Tube O.D.	T (NPT)	D	W Hex. Flat	W1 Hex. Flat	N	N1	L	L1	Panel hole drill size	Max. Panel thickness
	mm	inch	mm	mm	mm	mm	mm	mm	mm	mm	mm
774LM _ 6 X 1/8	6	1/8	4.8	16	16	42.2	26.2	49.6	33.6	11.5	10.2
774LM _ 6 X 1/4	6	1/4	4.8	16	16	46.2	26.2	53.6	33.6	11.5	10.2
774LM _ 12 X 1/2	12	1/2	9.5	24	24	58.7	31.8	68.8	41.9	19.5	12.7

TUBE (INCH) TO MALE NPT THREAD

Ordering Information	A Tube O.D.		T (NPT)	D		W Hex. Flat	W1 Hex. Flat	N		N1		L		L1		Panel hole drill size		Max. Panel thickness	
	inch	mm	inch	inch	mm	inch	inch	inch	mm	inch	mm	inch	mm	inch	mm	inch	mm	inch	mm
774LM _ 1/8 X 1/8	1/8	3.17	1/8	.09	2.28	1/2	1/2	1.57	39.90	.97	24.60	1.83	46.48	1.23	31.24	21/64	8.33	.50	12.70
774LM _ 1/4 X 1/8	1/4	6.35	1/8	.19	4.82	5/8	5/8	1.66	42.20	1.03	26.20	1.95	49.53	1.32	33.52	29/64	11.50	.40	10.16
774LM _ 1/4 X 1/4	1/4	6.35	1/4	.19	4.82	5/8	5/8	1.84	46.70	1.03	26.16	2.13	54.10	1.32	33.52	29/64	11.50	.40	10.16
774LM _ 3/8 X 1/4	3/8	9.52	1/4	.28	7.11	3/4	3/4	1.97	50.00	1.16	29.46	2.26	57.40	1.45	36.83	37/64	14.68	.44	11.17
774LM _ 3/8 X 3/8	3/8	9.52	3/8	.28	7.11	3/4	3/4	1.97	50.04	1.16	29.46	2.26	57.40	1.45	36.83	37/64	14.68	.44	11.17
774LM _ 3/8 X 1/2	3/8	9.52	1/2	.28	7.11	7/8	3/4	2.22	56.39	1.16	29.46	2.51	63.75	1.45	36.83	37/64	14.68	.44	11.17
774LM _ 1/2 X 3/8	1/2	12.70	3/8	.40	10.40	15/16	15/16	2.09	53.10	1.25	31.75	2.49	83.25	1.65	41.91	49/64	19.44	.50	12.70
774LM _ 1/2 X 1/2	1/2	12.70	1/2	.40	10.40	15/16	15/16	2.31	58.70	1.25	31.70	2.71	68.83	1.65	41.91	49/64	19.44	.50	12.70
774LM _ 3/4 X 3/4	3/4	19.05	3/4	.62	15.74	1 3/16	1 3/16	2.60	66.04	1.47	37.33	3.00	76.20	1.87	47.49	1 1/64	25.79	.66	16.76
774LM _ 1 X 1	1	25.4	1	.88	22.35	1 5/8	1 5/8	3.67	93.21	1.78	45.21	3.19	81.02	2.26	57.40	1 21/64	33.73	.75	19.05

"**D**" - Dimension is minimum opening. Dimensions are for reference only, and are subject to change without notice.

775 L

BULKHEAD REDUCING UNION

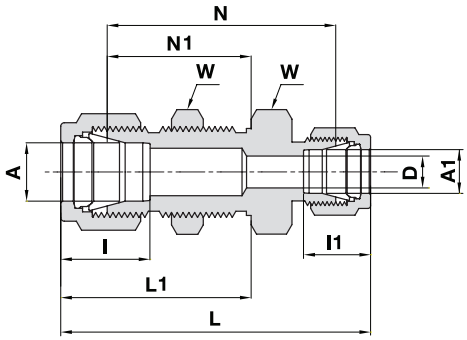

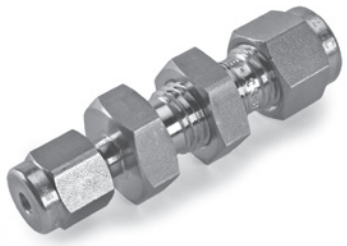

TUBE (METRIC) TO TUBE (INCH)

Ordering Information	A Tube O.D.	A1 Tube O.D.	D	W Hex. Flat	N	N1	L	L1	I	I1	Panel hole drill size	Max. Panel thickness
	mm	inch	mm	mm	mm	mm	mm	mm	mm	mm	mm	mm
775L _ 6 X 1/8	6	1/8	2.4	16	43.9	26.2	55.1	33.6	15.3	12.7	11.5	10.2
775L _ 6 X 1/4	6	1/4	4.8	16	42.9	26.2	57.7	33.6	15.3	15.2	11.5	10.2
775L _ 12 X 1/2	12	1/2	9.5	24	50.8	31.8	71.1	41.9	22.8	22.9	19.5	12.7
775L _ 18 X 3/4	18	3/4	15.1	30	58.7	37.3	79.0	47.4	24.4	24.4	26.0	16.8

TUBE (INCH) TO TUBE (INCH)

Ordering Information	A Tube O.D.		A1 Tube O.D.		D		W Hex. Flat	N		N1		L		L1		I		I1		Panel hole drill size		Max. Panel thickness	
	inch	mm	inch	mm	inch	mm	inch	inch	mm	inch	mm	inch	mm	inch	mm	inch	mm	inch	mm	inch	mm	inch	mm
775L _ 1/8 X 1/16	1/8	3.17	1/16	1.58	.05	1.27	1/2	1.44	36.57	.97	24.64	1.85	46.99	1.23	31.24	.50	12.7	.34	8.6	21/64	8.33	.50	12.70
775L _ 3/16 X 1/4	3/16	4.76	1/4	6.35	.12	3.04	9/16	1.62	41.15	1.00	25.40	2.17	55.12	1.26	32.00	.54	13.7	.60	15.2	25/64	9.92	.50	12.70
775L _ 1/4 X 1/8	1/4	6.35	1/8	3.17	.09	2.28	5/8	1.62	41.15	1.03	26.16	2.17	55.12	1.32	33.53	.60	15.2	.50	12.7	29/64	11.50	.40	10.16
775L _ 1/4 X 3/8	1/4	6.35	3/8	9.52	.19	4.82	5/8	1.74	44.20	1.03	26.16	2.61	66.29	1.32	33.53	.60	15.2	.66	16.8	29.64	11.50	.40	10.16
775L _ 3/8 X 1/4	3/8	9.52	1/4	6.35	.19	4.82	3/4	1.81	45.97	1.16	29.46	2.39	60.71	1.45	36.83	.66	16.8	.60	15.2	37/64	14.68	.44	11.17
775L _ 1/2 X 1/4	1/2	12.70	1/4	6.35	.19	4.82	15/16	1.94	49.28	1.25	31.75	2.63	66.80	1.65	41.91	.90	22.9	.60	15.2	49/64	19.44	.50	12.70
775L _ 1/2 X 5/8	1/2	12.70	5/8	15.87	.41	10.41	15/16	2.03	51.56	1.25	31.75	2.83	71.88	1.65	41.91	.90	22.9	.96	24.4	49/64	19.44	.50	12.70
775L _ 5/8 X 3/8	5/8	15.87	3/8	9.52	.28	7.11	1 1/16	2.06	52.32	1.28	32.51	2.75	69.85	1.68	42.67	.96	24.4	.66	16.8	57/64	22.62	.50	12.70

"**D**" - Dimension is minimum opening. Dimensions are for reference only, and are subject to change without notice.

7102 L
UNION CROSS

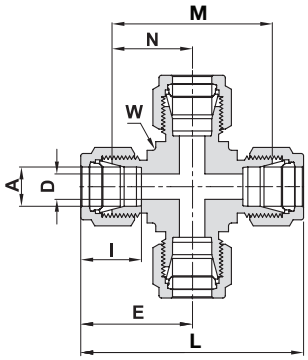

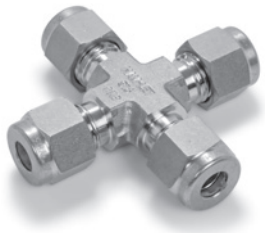

ALL TUBES (METRIC)

Ordering Information	A Tube O.D.	D	W Wrench Flat		N	E	M	L	I
	mm	mm	inch	mm	mm	mm	mm	mm	mm
7102L _ 3	3	2.4	3/8	9.5	15.7	22.3	31.5	44.7	12.9
7102L _ 6	6	4.8	1/2	12.7	19.6	27.0	39.1	53.9	15.3
7102L _ 8	8	6.4	5/8	15.9	22.4	29.9	44.7	59.7	16.2
7102L _ 10	10	7.9	13/16	20.6	25.9	33.5	51.8	67.0	17.2
7102L _ 12	12	9.5	13/16	20.6	25.9	36.0	51.8	72.0	22.8
7102L _ 16	16	12.7	15/16	23.8	26.9	37.0	53.8	74.0	24.4
7102L _ 18	18	15.1	1 1/16	27.0	28.2	38.3	56.4	76.6	24.4
7102L _ 20	20	15.9	1 3/8	34.9	34.5	44.6	69.0	89.3	26.0
7102L _ 22	22	18.3	1 3/8	34.9	34.6	44.7	69.1	89.4	26.0
7102L _ 25	25	21.8	1 3/8	34.9	36.8	49.1	73.7	98.3	31.3

ALL TUBES (INCH)

Ordering Information	A Tube O.D.		D		W Wrench Flat		N		E		M		L		I	
	inch	mm	inch	mm	inch	mm	inch	mm	inch	mm	inch	mm	inch	mm	inch	mm
7102L _ 1/8	1/8	3.17	.09	2.28	3/8	9.5	.62	15.74	.88	22.35	1.24	31.48	1.76	44.70	.50	12.7
7102L _ 1/4	1/4	6.35	.19	4.82	1/2	12.7	.77	19.56	1.06	26.92	1.54	39.12	2.12	53.84	.60	15.2
7102L _ 5/16	5/16	7.93	.25	6.35	5/8	15.9	.88	22.35	1.17	29.71	1.76	44.70	2.34	59.42	.64	16.2
7102L _ 3/8	3/8	9.52	.28	7.11	5/8	15.9	.91	23.11	1.20	30.48	1.82	46.22	2.40	60.96	.66	16.8
7102L _ 1/2	1/2	12.70	.41	10.41	13/16	20.6	1.02	25.9	1.42	36.07	2.04	51.80	2.84	72.14	.90	22.9
7102L _ 3/4	3/4	19.05	.62	15.74	1 1/16	27.0	1.17	29.72	1.57	39.88	2.34	59.44	3.14	79.76	.96	24.4
7102L _ 1	1	25.40	.88	22.35	1 3/8	34.9	1.45	36.8	1.93	49.02	2.90	73.60	3.86	98.04	1.23	31.2

"**D**" - Dimension is minimum opening. Dimensions are for reference only, and are subject to change without notice.

7108 L
CAP

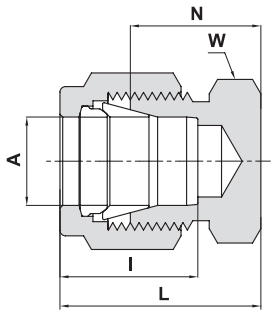

CAPPING END OF TUBE (METRIC)

Ordering Information	A Tube O.D.	W Hex. Flat	N	L	I
	mm	mm	mm	mm	mm
7108L _ 2	2	12	13.5	20.1	12.9
7108L _ 3	3	12	13.5	20.1	12.9
7108L _ 4	4	12	14.7	21.3	13.7
7108L _ 6	6	14	15.7	23.1	15.3
7108L _ 8	8	15	17.0	24.5	16.2
7108L _ 10	10	18	19.0	26.6	17.2
7108L _ 12	12	22	19.0	29.1	22.8
7108L _ 14	14	24	19.8	29.9	24.4
7108L _ 15	15	24	19.8	29.9	24.4
7108L _ 16	16	24	19.8	29.9	24.4
7108L _ 18	18	27	21.3	31.4	24.4
7108L _ 20	20	30	23.9	34.0	26.0
7108L _ 22	22	30	23.9	34.0	26.0
7108L _ 25	25	35	26.2	38.5	31.3
7108L _ 38	*38	55	37.8	65.4	49.4

CAPPING END OF TUBE (INCH)

Ordering Information	A Tube O.D.		W Hex. Flat	N		L		I	
	inch	mm	inch	inch	mm	inch	mm	inch	mm
7108L _ 1/16	1/16	1.58	5/16	.44	11.17	.59	14.98	.34	8.6
7108L _ 1/8	1/8	3.17	7/16	.53	13.46	.79	20.06	.50	12.7
7108L _ 3/16	3/16	4.76	7/16	.58	14.73	.84	21.84	.54	13.7
7108L _ 1/4	1/4	6.35	1/2	.63	16.00	.92	23.37	.60	15.2
7108L _ 5/16	5/16	7.93	9/16	.67	17.01	.96	24.38	.64	16.2
7108L _ 3/8	3/8	9.52	5/8	.72	18.28	1.01	26.65	.66	16.8
7108L _ 1/2	1/2	12.70	13/16	.75	19.05	1.15	29.21	.90	22.9
7108L _ 5/8	5/8	15.87	15/16	.78	19.81	1.18	29.97	.96	24.4
7108L _ 3/4	3/4	19.05	1 1/16	.84	21.33	1.24	31.49	.96	24.4
7108L _ 7/8	7/8	22.22	1 3/16	.94	23.88	1.34	34.04	1.02	25.9
7108L _ 1	1	25.40	1 3/8	1.03	26.16	1.51	38.35	1.23	31.2
7108L _ 1 1/4	*1 1/4	31.75	1 3/4	1.23	31.24	2.10	53.34	1.62	41.2
7108L _ 1 1/2	*1 1/2	38.10	2 1/8	1.47	37.33	2.54	64.52	1.97	50.0
7108L _ 2	*2	50.80	2 3/4	1.94	49.28	3.41	86.61	2.66	67.6

* Including low friction paste, See page 89

"**D**" - Dimension is minimum opening. Dimensions are for reference only, and are subject to change without notice.

7121 L
PLUG

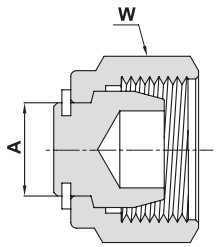

PLUGGING UNUSED PORT OF FITTING (METRIC)

Ordering Information	A	W Hex. Flat
	mm	mm
7121L _ 2	2	14
7121L _ 3	3	12
7121L _ 4	4	12
7121L _ 6	6	14
7121L _ 8	8	16
7121L _ 10	10	19
7121L _ 12	12	22
7121L _ 14	14	25
7121L _ 15	15	25
7121L _ 16	16	25
7121L _ 18	18	30
7121L _ 20	20	32
7121L _ 22	22	32
7121L _ 25	25	38
7121L _ 38	*38	60
7121L _ 50	*50	3 inch

PLUGGING UNUSED PORT OF FITTING (INCH)

Ordering Information	A		W Hex. Flat
	inch	mm	inch
7121L _ 1/16	1/16	1.58	5/16
7121L _ 1/8	1/8	3.17	7/16
7121L _3/16	3/16	4.76	1/2
7121L _1/4	1/4	6.35	9/16
7121L _ 5/16	5/16	7.93	5/8
7121L _ 3/8	3/8	9.52	11/16
7121L _ 1/2	1/2	12.70	7/8
7121L _ 5/8	5/8	15.87	1
7121L _ 3/4	3/4	19.05	1 1/8
7121L _ 7/8	7/8	22.22	1 1/4
7121L _ 1	1	25.40	1 1/2
7121L _ 1 1/4	*1 1/4	31.75	1 7/8
7121L _ 1 1/2	*1 1/2	38.10	2 1/4
7121L _ 2	*2	50.80	3

* Including low friction paste, See page 89

PLUG ASSEMBLY INSTRUCTIONS

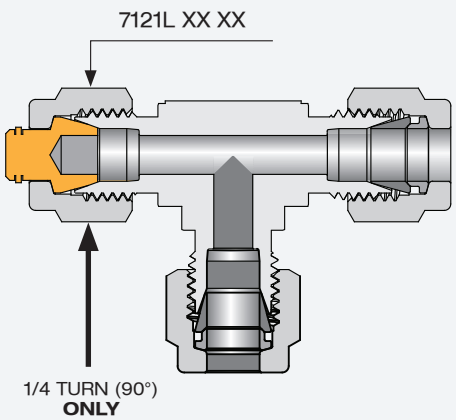

"**D**" - Dimension is minimum opening. Dimensions are for reference only, and are subject to change without notice.

739 LF

FEMALE ADAPTER TUBE TO PIPE

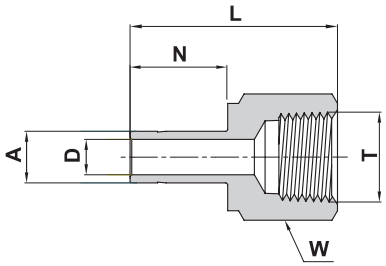

TUBE (METRIC) FEMALE PIPE

Ordering Information	A Tube O.D.	T (NPT)	D	W Hex. Flat	N	L
	mm	inch	mm	mm	mm	mm
739LF _ 3 X 1/8	3	1/8	2.1	14	13.5	31.5
739LF _ 3 X 1/4	3	1/4	2.1	19	13.5	35.3
739LF _ 4 X 1/4	4	1/4	2.2	19	14.2	35.0
739LF _ 6 X 1/8	6	1/8	4.0	14	15.7	32.5
739LF _ 6 X 1/4	6	1/4	4.0	19	15.7	37.1
739LF _ 6 X 3/8	6	3/8	4.0	22	15.7	39.6
739LF _ 6 X 1/2	6	1/2	4.0	27	15.7	45.5
739LF _ 8 X 1/8	8	1/8	5.6	14	16.8	34.3
739LF _ 8 X 1/4	8	1/4	5.6	19	16.8	37.6
739LF _ 8 X 1/2	8	1/2	5.6	27	16.8	46.0
739LF _ 10 X 1/4	10	1/4	7.1	19	17.5	38.1
739LF _ 10 X 3/8	10	3/8	7.1	22	17.5	40.1
739LF _ 10 X 1/2	10	1/2	7.1	27	17.5	46.5
739LF _ 12 X 1/4	12	1/4	8.8	19	23.1	43.4
739LF _ 12 X 3/8	12	3/8	8.8	22	23.1	45.5
739LF _ 12 X 1/2	12	1/2	8.8	27	23.1	52.3
739LF _ 16 X 3/8	16	3/8	12.7	24	24.7	48.0
739LF _ 16 X 1/2	16	1/2	12.7	27	24.7	53.1
739LF _ 20 X 1/2	20	1/2	15.1	27	26.6	56.0
739LF _ 20 X 3/4	20	3/4	15.1	35	26.6	56.0

"**D**" - Dimension is minimum opening. Dimensions are for reference only, and are subject to change without notice.

Cont'd next page

739 LF

FEMALE ADAPTER TUBE TO PIPE

(Cont'd)

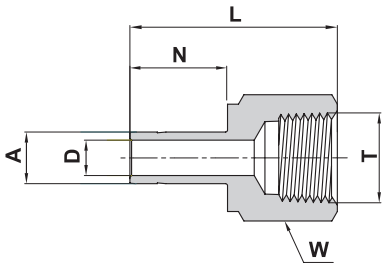

TUBE (INCH) FEMALE PIPE

Ordering Information	A Tube O.D.		T (NPT)	D		W Hex. Flat	N		L	
	inch	mm	inch	inch	mm	inch	inch	mm	inch	mm
739LF _ 1/8 X 1/8	1/8	3.17	1/8	.09	2.2	9/16	.53	13.45	1.24	31.5
739LF _ 1/8 X 1/4	1/8	3.17	1/4	.09	2.2	3/4	.53	13.45	1.39	35.3
739LF _ 3/16 X 1/4	3/16	4.76	1/4	.12	3.0	3/4	.56	14.20	1.41	35.8
739LF _ 1/4 X 1/8	1/4	6.35	1/8	.17	4.2	9/16	.62	15.75	1.30	33.0
739LF _ 1/4 X 1/4	1/4	6.35	1/4	.17	4.2	3/4	.62	15.75	1.46	37.1
739LF _ 1/4 X 3/8	1/4	6.35	3/8	.17	4.2	7/8	.62	15.75	1.55	39.4
739LF _ 1/4 X 1/2	1/4	6.35	1/2	.17	4.2	1 1/16	.62	15.75	1.79	45.5
739LF _ 5/16 X 1/4	5/16	7.93	1/4	.22	5.6	3/4	.66	16.75	1.48	37.6
739LF _ 3/8 X 1/8	3/8	9.52	1/8	.27	6.9	9/16	.69	17.50	1.35	34.3
739LF _ 3/8 X 1/4	3/8	9.52	1/4	.27	6.9	3/4	.69	17.50	1.50	38.1
739LF _ 3/8 X 3/8	3/8	9.52	3/8	.27	6.9	7/8	.69	17.50	1.59	40.4
739LF _ 3/8 X 1/2	3/8	9.52	1/2	.27	6.9	1 1/16	.69	17.50	1.84	46.7
739LF _ 1/2 X 1/4	1/2	12.70	1/4	.37	9.4	3/4	.91	23.10	1.71	43.4
739LF _ 1/2 X 3/8	1/2	12.70	3/8	.37	9.4	7/8	.91	23.10	1.79	45.5
739LF _ 1/2 X 1/2	1/2	12.70	1/2	.37	9.4	1 1/16	.91	23.10	2.05	52.1
739LF _ 5/8 X 1/2	5/8	15.87	1/2	.50	12.7	1 1/16	.97	24.65	2.09	53.1
739LF _ 3/4 X 1/2	3/4	19.05	1/2	.59	15.0	1 1/16	.97	24.65	2.08	52.8
739LF _ 3/4 X 3/4	3/4	19.05	3/4	.59	15.0	1 5/16	.97	24.65	2.16	54.9
739LF _ 3/4 X 1	3/4	19.05	1	.59	15.0	1 5/8	.97	24.65	2.30	58.4
739LF _ 1 X 3/4	1	25.40	3/4	.80	20.3	1 5/16	1.23	31.20	2.39	60.7
739LF _ 1 X 1	1	25.40	1	.80	20.3	1 5/8	1.23	31.20	2.53	64.3
739LF _ 1 1/4 X 1 1/4	* 1 1/4	31.75	1 1/4	1.02	25.9	2 1/8	1.73	43.82	3.06	77.7
739LF _ 1 1/2 X 1 1/2	* 1 1/2	38.10	1 1/2	1.25	31.8	2 3/8	2.14	54.33	3.50	88.9

* Supplied assembled with Nut and Ferrules. Including low friction paste, See page 89

"**D**" - Dimension is minimum opening. Dimensions are for reference only, and are subject to change without notice.

739 LM

MALE ADAPTER TUBE TO PIPE

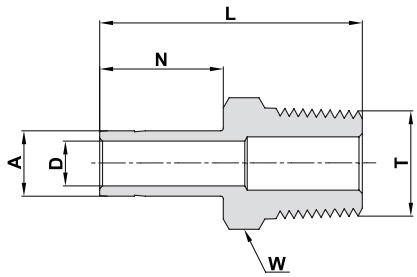

TUBE (METRIC) MALE PIPE

Ordering Information	A Tube O.D.	T (NPT)	D	W Hex. Flat	N	L
	mm	inch	mm	mm	mm	mm
739LM _ 3 X 1/8	3	1/8	2.1	12	13.5	30.0
739LM _ 3 X 1/4	3	1/4	2.1	14	13.5	35.3
739LM _ 6 X 1/8	6	1/8	4.0	12	15.7	32.8
739LM _ 6 X 1/4	6	1/4	4.0	14	15.7	38.1
739LM _ 6 X 3/8	6	3/8	4.0	18	15.7	37.0
739LM _ 6 X 1/2	6	1/2	4.0	22	15.7	43.4
739LM _ 8 X 1/8	8	1/8	4.8	12	16.8	33.5
739LM _ 8 X 1/4	8	1/4	5.6	14	16.8	39.1
739LM _ 8 X 3/8	8	3/8	5.6	11/16 inch	16.8	37.8
739LM _ 8 X 1/2	8	1/2	5.6	22	16.8	43.0
739LM _ 10 X 1/4	10	1/4	7.1	9/16 inch	17.5	39.9
739LM _ 10 X 3/8	10	3/8	7.1	18	17.5	40.6
739LM _ 10 X 1/2	10	1/2	7.1	22	17.5	46.2
739LM _ 12 X 1/4	12	1/4	7.1	16	23.1	46.5
739LM _ 12 X 3/8	12	3/8	8.8	18	23.1	46.5
739LM _ 12 X 1/2	12	1/2	8.8	22	23.1	52.0
739LM _ 16 X 1/2	16	1/2	11.9	22	24.7	50.5
739LM _ 20 X 3/4	20	3/4	15.1	27	26.6	54.3

"**D**" - Dimension is minimum opening. Dimensions are for reference only, and are subject to change without notice.

Cont'd next page

739 LM

MALE ADAPTER TUBE TO PIPE

(Cont'd)

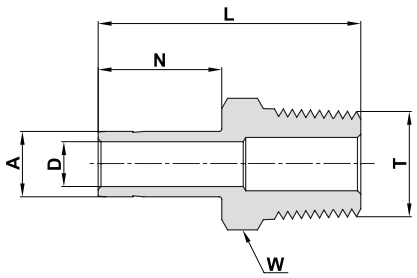

TUBE (INCH) MALE PIPE

Ordering Information	A Tube O.D.		T (NPT)	D		W Hex. Flat	N		L	
	inch	mm	inch	inch	mm	inch	inch	mm	inch	mm
739LM _ 1/8 X 1/8	1/8	3.17	1/8	.09	2.2	7/16	.53	13.45	1.16	29.5
739LM _ 1/8 X 1/4	1/8	3.17	1/4	.09	2.2	9/16	.53	13.45	1.37	34.8
739LM _ 3/16 X 1/8	3/16	4.76	1/8	.12	3.0	7/16	.56	14.20	1.19	30.2
739LM _ 3/16 X 1/4	3/16	4.76	1/4	.12	3.0	9/16	.56	14.20	1.40	35.6
739LM _ 1/4 X 1/8	1/4	6.35	1/8	.17	4.2	7/16	.62	15.75	1.25	31.8
739LM _ 1/4 X 1/4	1/4	6.35	1/4	.17	4.2	9/16	.62	15.75	1.46	37.1
739LM _ 1/4 X 3/8	1/4	6.35	3/8	.17	4.2	11/16	.62	15.75	1.49	37.9
739LM _ 1/4 X 1/2	1/4	6.35	1/2	.17	4.2	7/8	.62	15.75	1.71	43.4
739LM _ 5/16 X 1/8	5/16	7.93	1/8	.22	5.6	7/16	.66	16.75	1.29	32.7
739LM _ 5/16 X 1/4	5/16	7.93	1/4	.22	5.6	9/16	.66	16.75	1.50	38.1
739LM _ 3/8 X 1/8	3/8	9.52	1/8	.27	6.9	7/16	.69	17.50	1.32	33.5
739LM _ 3/8 X 1/4	3/8	9.52	1/4	.27	6.9	9/16	.69	17.50	1.53	38.9
739LM _ 3/8 X 3/8	3/8	9.52	3/8	.27	6.9	11/16	.69	17.50	1.56	39.6
739LM _ 3/8 X 1/2	3/8	9.52	1/2	.27	6.9	7/8	.69	17.50	1.78	45.2
739LM _ 1/2 X 1/4	1/2	12.70	1/4	.28	7.1	9/16	.91	23.10	1.75	44.5
739LM _ 1/2 X 3/8	1/2	12.70	3/8	.37	9.4	11/16	.91	23.10	1.78	45.2
739LM _ 1/2 X 1/2	1/2	12.70	1/2	.37	9.4	7/8	.91	23.10	20.0	50.8
739LM _ 5/8 X 3/8	5/8	15.87	3/8	.37	9.5	11/16	.97	24.65	1.81	47.6
739LM _ 5/8 X 1/2	5/8	15.87	1/2	.47	11.9	7/8	.97	24.65	2.06	52.3
739LM _ 5/8 X 3/4	5/8	15.87	3/4	.50	12.7	1 1/16	.97	24.65	2.03	52.3
739LM _ 3/4 X 1/2	3/4	19.05	1/2	.47	11.9	7/8	.97	24.65	2.06	52.3
739LM _ 3/4 X 3/4	3/4	19.05	3/4	.59	15.0	1 1/16	.97	24.65	2.06	52.3
739LM _ 3/4 X 1	3/4	19.05	1	.59	15.0	1 3/8	.97	24.65	2.28	57.3
739LM _ 7/8 X 3/4	7/8	22.22	3/4	.60	15.9	1 1/16	1.05	26.60	2.09	54.3
739LM _ 1 X 3/4	1	25.40	3/4	.60	15.8	1 1/16	1.30	33.00	2.31	58.7
739LM _ 1 X 1	1	25.40	1	.80	20.3	1 3/8	1.30	33.00	2.60	66.0
739LM _ 1 1/4 X 1 1/4	* 1 1/4	31.75	1 1/4	1.02	25.9	1 3/4	1.73	43.82	3.16	80.3
739LM _ 1 1/2 X 1 1/2	* 1 1/2	38.10	1 1/2	1.25	31.8	2 1/8	2.14	54.33	3.72	94.5

* Supplied assembled with Nut and Ferrules. Including low friction paste, See page 89

"**D**" - Dimension is minimum opening. Dimensions are for reference only, and are subject to change without notice.

739 LMR

MALE ADAPTER TUBE TO PIPE

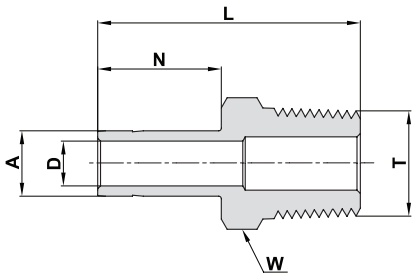

TUBE (METRIC) MALE PIPE

Ordering Information	A Tube O.D.	T (ISO)	D	W Hex. Flat	N	L
	mm	inch	mm	mm	mm	mm
739LMR _ 6 X 1/8	6	R-1/8	4.0	12	15.7	32.8
739LMR _ 6 X 1/4	6	R-1/4	4.0	14	15.7	38.1
739LMR _ 6 X 1/2	6	R-1/2	4.0	22	15.7	43.4
739LMR _ 8 X 1/8	8	R-1/8	4.8	12	16.8	33.5
739LMR _ 8 X 1/4	8	R-1/4	5.6	14	16.8	39.1
739LMR _ 8 X 3/8	8	R-3/8	5.6	11/16 inch	16.8	37.8
739LMR _ 10 X 1/4	10	R-1/4	7.1	14	17.5	39.9
739LMR _ 10 X 3/8	10	R-3/8	7.1	18	17.5	40.6
739LMR _ 10 X 1/2	10	R-1/2	7.1	22	17.5	46.2
739LMR _ 12 X 1/4	12	R-1/4	7.1	16	23.1	46.5
739LMR _ 12 X 3/8	12	R-3/8	8.8	18	23.1	46.2
739LMR _ 12 X 1/2	12	R-1/2	8.8	22	23.1	52.0
739LMR _ 20 X 3/4	20	R-3/4	15.1	27	26.6	54.3

TUBE (INCH) MALE PIPE

Ordering Information	A Tube O.D.		T (ISO)	D		W Hex. Flat	N		L	
	inch	mm	inch	inch	mm	inch	inch	mm	inch	mm
739LMR _ 1/8 X 1/8	1/8	3.17	R-1/8	.09	2.2	7/16	.53	13.45	1.16	29.5
739LMR_ 1/8 X 1/4	1/8	3.17	R-1/4	.09	2.2	9/16	.53	13.45	1.37	34.8
739LMR _ 1/4 X 1/8	1/4	6.35	R-1/8	.17	4.2	7/16	.62	15.75	1.25	31.8
739LMR _ 1/4 X 1/4	1/4	6.35	R-1/4	.17	4.2	9/16	.62	15.75	1.46	37.1
739LMR _ 1/4 X 3/8	1/4	6.35	R-3/8	.17	4.2	11/16	.62	15.75	1.49	37.9
739LMR _ 1/4 X 1/2	1/4	6.35	R-1/2	.17	4.2	7/8	.62	15.75	1.71	43.4
739LMR _ 3/8 X 1/4	3/8	9.52	R-1/4	.27	6.9	9/16	.69	17.50	1.53	38.9
739LMR _ 3/8 X 3/8	3/8	9.52	R-3/8	.27	6.9	11/16	.69	17.50	1.56	39.6
739LMR _ 3/8 X 1/2	3/8	9.52	R-1/2	.27	6.9	7/8	.69	17.50	1.78	45.2
739LMR _ 1/2 X 1/4	1/2	12.70	R-1/4	.28	7.1	9/16	.91	23.10	1.75	44.5
739LMR _ 1/2 X 3/8	1/2	12.70	R-3/8	.37	9.4	11/16	.91	23.10	1.78	45.2
739LMR _ 1/2 X 1/2	1/2	12.70	R-1/2	.37	9.4	7/8	.91	23.10	20.0	50.8
739LMR _ 5/8 X 1/2	5/8	15.87	R-1/2	.47	11.9	7/8	.97	24.65	2.06	52.3
739LMR _ 3/4 X 1/2	3/4	19.05	R-1/2	.47	11.9	7/8	.97	24.65	2.06	52.3
739LMR _ 3/4 X 3/4	3/4	19.05	R-3/4	.59	15.0	1 1/16	.97	24.65	2.06	52.3
739LMR _ 1 X 1	1	25.40	R-1	.80	20.3	1 3/8	1.30	33.00	2.60	66.0

Reference Specifications:

DIN -ISO 2999
BS - 21JIS - B0203ISO - 7/1-BSP-T

Designation:
Marking LR on Hex

55° Thread angle
Truncation of root and crest is round
Taper angle 1°47'

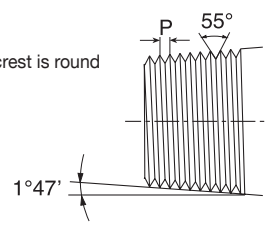

"**D**" - Dimension is minimum opening. Dimensions are for reference only, and are subject to change without notice.

739 LN
WELD ADAPTER TUBE TO PIPE

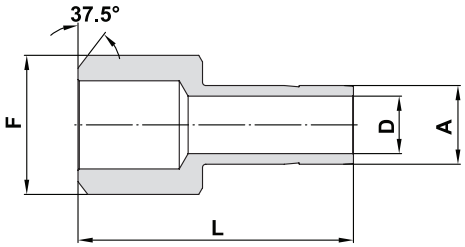

TUBE (INCH)								
Ordering Information	A Tube O.D.		F Pipe Size		D		L	
	inch	mm	inch	mm	inch	mm	inch	mm
739LN _ 1/4 X 1/4	1/4	6.35	1/4	13.70	.17	4.20	1.14	28.96
739LN _ 3/8 X 1/2	3/8	9.52	1/2	21.34	.27	6.85	1.46	37.08
739LN _ 1/2 X 1/2	1/2	12.7	1/2	21.34	.37	9.40	1.66	42.15
739LN _ 1/2 X 3/4	1/2	12.7	3/4	26.67	.37	9.40	1.68	42.67
739LN _ 3/4 X 3/4	3/4	19.05	3/4	26.67	.59	15.00	1.87	47.50

739 LW
SOCKET WELD ADAPTER

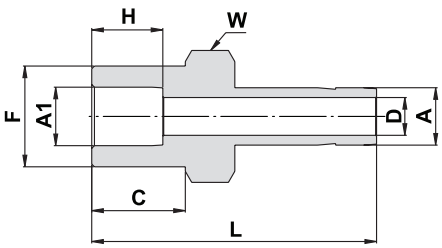

TUBE (METRIC) TO TUBE (INCH)								
Ordering Information	A Tube O.D.	A1 Pipe Size	C	D	W	F	H	L
	mm	inch	mm	mm	inch	mm	mm	mm
739LW _ 6 X 1/4	6	1/4	10.4	4.0	1/2	11.2	7.9	31.7
739LW _ 10 X 1/4	10	1/4	10.4	4.8	9/16	11.2	7.9	34.0
739LW _ 10 X 3/8	10	3/8	11.9	7.1	5/8	15.8	9.7	36.0

TUBE (INCH) TO TUBE (INCH)																
Ordering Information	A Tube O.D.		A1 Pipe Size		C		D		W		F		H		L	
	inch	mm	inch	mm	inch	mm	inch	mm	inch	mm	inch	mm	inch	mm	inch	mm
739LW _ 1/4 X 1/4	1/4	6.35	1/4	6.35	.41	10.41	.17	4.20	1/2	12.7	.44	11.18	.31	7.90	1.25	31.70
739LW _ 3/8 X 3/8	3/8	9.52	3/8	9.52	.47	11.94	.28	7.11	5/8	15.9	.62	15.75	.38	9.65	1.42	36.70
739LW _ 1/2 X 1/2	1/2	12.7	1/2	12.7	.47	11.94	.39	9.91	13/16	20.6	.75	19.05	.50	12.7	1.67	42.42

"**D**" - Dimension is minimum opening. Dimensions are for reference only, and are subject to change without notice.

739 LMOB
MALE ADAPTER

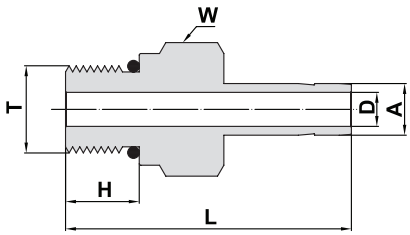

TUBE (INCH) TO SAE/MS STRAIGHT THREAD BOSS***												
Ordering Information	A Tube O.D.		T Straight Thread UN	D		W		H		L		O-Ring**
	inch	mm	inch	inch	mm	inch	mm	inch	mm	inch	mm	
739LMOB _ 1/8 X 5/16-24	1/8	3.18	5/16-24	.09	2.20	7/16	11.1	.30	7.62	1.20	30.48	-902
739LMOB _ 1/4 X 7/16-20	1/4	6.35	7/16-20	.17	4.20	9/16	14.3	.36	9.14	1.39	35.3	-904
739LMOB _ 1/4 X 9/16-18	1/4	6.35	9/16-18	.17	4.20	11/16	17.5	.39	9.90	1.42	36.07	-906
739LMOB _ 3/8 X 7/16-20	3/8	9.52	7/16-20	.20	5.10	9/16	14.3	.36	9.14	1.46	37.08	-904
739LMOB _ 3/8 X 9/16-18	3/8	9.52	9/16-18	.27	6.85	11/16	17.5	.39	9.90	1.52	38.61	-906
739LMOB _ 3/8 X 3/4-16	3/8	9.52	3/4-16	.27	6.85	7/8	22.2	.44	11.17	1.60	40.64	-908
739LMOB _ 1/2 X 9/16-18	1/2	12.7	9/16-18	.28	7.11	11/16	17.5	.39	9.90	1.74	44.20	-906
739LMOB _ 1/2 X 3/4-16	1/2	12.7	3/4-16	.37	9.40	7/8	22.2	.44	11.17	1.82	46.23	-908
739LMOB _ 5/8 X 7/8-14	5/8	15.87	7/8-14	.47	11.94	1	25.4	.50	12.70	1.94	49.28	-910
739LMOB _ 3/4 X 1 1/16-12	3/4	19.05	1 1/16-12	.59	15.00	1 1/4	31.8	.59	14.98	2.10	53.34	-912
739LMOB _ 1 X 1 5/16-12	1	25.40	1 5/16-12	.80	20.32	1 1/2	38.1	.59	14.98	2.41	61.21	-916
739LMOB _ 1 1/4 X 1 5/8-12	* 1 1/4	31.75	1 5/8-12	1.09	27.70	1 7/8	47.6	.59	15.10	2.69	68.33	-920
739LMOB _ 1 1/2 X 1 7/8-12	*1 1/2	38.10	1 7/8-12	1.34	34.00	2 1/8	54.0	.59	15.10	3.06	77.72	-924

Designation: Marking LOB on Hex.

*** Per SAE J1926 and MS 16142. See page 78 for mounting dimensions.

** O-rings used are Viton 90 Durometer. Other O-ring materials are available on request.

* Supplied assembled with Nut + Front and Back Ferrule. Including low friction paste, See page 89.

"**D**" - Dimension is minimum opening. Dimensions are for reference only, and are subject to change without notice.

761 LFL
LET-LOK® TO AN ADAPTER

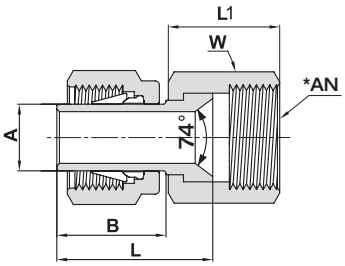

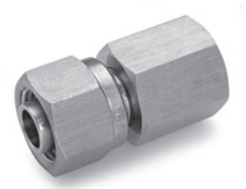

Ordering Information	A Tube O.D.		* AN Tube Flare Size		W Hex. Flat	L		L1		B	
	inch	mm	inch	mm	inch	inch	mm	inch	mm	inch	mm
761LFL _ 1/8 X 1/8	1/8	3.17	1/8	3.17	3/8	.75	19.05	.54	13.71	.53	13.46
761LFL _ 1/8 X 1/4	1/8	3.17	1/4	6.35	9/16	.75	19.05	.61	15.50	.53	13.46
761LFL _ 1/4 X 1/4	1/4	6.35	1/4	6.35	9/16	.84	21.33	.61	15.50	.62	15.75
761LFL _ 3/8 X 3/8	3/8	9.52	3/8	9.52	11/16	.98	24.89	.72	18.30	.69	17.53
761LFL _ 1/2 X 1/2	1/2	12.70	1/2	12.70	7/8	1.25	31.75	.84	21.30	.91	23.11

762 LFL
LET-LOK® TO AN UNION

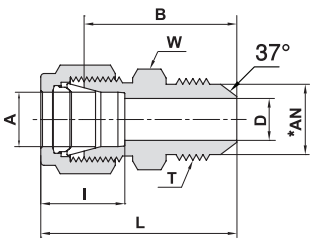

TUBE (INCH) TO TUBE (INCH)

Ordering Information	A Tube O.D.		*AN Tube Flare size		D		W Hex. Flat	B		L		I		T Straight Thread
	inch	mm	inch	mm	inch	mm	inch	inch	mm	inch	mm	inch	mm	
762LFL _ 1/16 X 1/8	1/16	1.58	1/8	3.17	.05	1.27	7/16	.92	23.36	1.07	27.18	.34	8.6	5/16-24
762LFL _ 1/8 X 1/8	1/8	3.17	1/8	3.17	.06	1.52	7/16	1.01	25.65	1.27	32.26	.50	12.7	5/16-24
762LFL _ 1/8 X 1/4	1/8	3.17	1/4	6.35	.09	2.28	1/2	1.12	28.44	1.38	35.05	.50	12.7	7/16-20
762LFL _ 1/4 X 1/4	1/4	6.35	1/4	6.35	.17	4.31	1/2	1.19	30.22	1.48	37.59	.60	15.2	7/16-20
762LFL _ 3/8 X 1/4	3/8	9.52	1/4	6.35	.17	4.31	5/8	1.27	32.25	1.56	39.62	.66	16.8	7/16-20
762LFL _ 3/8 X 3/8	3/8	9.52	3/8	9.52	.28	7.11	5/8	1.27	32.25	1.56	39.62	.66	16.8	9/16-18
762LFL _ 1/2 X 1/2	1/2	12.70	1/2	12.70	.39	9.90	13/16	1.41	35.8	1.81	45.96	.90	22.9	3/4-16
762LFL _ 3/4 X 3/4	3/4	19.05	3/4	19.05	.61	15.49	1 1/8	1.70	43.18	2.10	53.34	.96	24.4	1 1/16-12
762LFL _ 1 X 1	1	25.40	1	25.40	.84	21.34	1 3/8	1.94	49.28	2.42	61.47	1.23	31.2	1 5/16-12

774 LFL
LET-LOK® TO AN BULKHEAD UNION

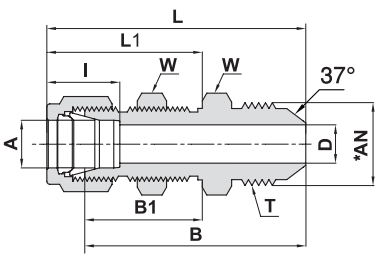

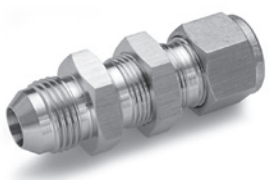

TUBE (INCH) TO TUBE (INCH)

Ordering Information	A Tube O.D.		*AN Tube Flare size		D		W Hex. Flat		B		B1		L		L1		T Straight Thread	Panel hole drill size		Max. panel thickness		I	
	inch	mm	inch	mm	inch	mm	inch	mm	inch	mm	inch	mm	inch	mm	inch	mm	inch	inch	mm	inch	mm	inch	mm
774LFL _1/4 X 1/4	1/4	6.35	1/4	6.35	.17	4.30	5/8	15.9	1.83	46.48	1.03	26.16	2.12	53.84	1.32	33.52	7/16-20	29/64	11.50	.40	10.16	.60	15.2
774LFL _3/8 X 3/8	3/8	9.52	3/8	9.52	.28	7.11	3/4	19.1	1.96	49.78	1.16	29.46	2.25	57.15	1.45	36.83	9/16-18	37/64	14.68	.44	11.17	.66	16.8
774LFL _1/2 X 1/2	1/2	12.70	1/2	12.70	.39	9.90	15/16	23.8	2.19	55.63	1.25	31.75	2.59	65.79	1.65	41.91	3/4-16	49/64	19.45	.50	12.70	.90	22.9
774LFL _3/4 X 3/4	3/4	19.05	3/4	19.05	.61	15.49	1 3/16	30.2	2.71	68.83	1.47	37.34	3.11	78.99	1.87	47.50	1 1/16-12	1 1/64	25.80	.66	16.76	.96	24.4
774LFL _1 X 1	1	25.40	1	25.40	.84	21.33	1 5/8	41.3	3.16	80.26	1.78	45.21	3.64	92.46	2.26	57.40	1 5/16-12	1 21/64	33.73	.75	19.05	.23	31.2

* Flare 37° per SAE J514. "**D**" - Dimension is minimum opening. Dimensions are for reference only, and are subject to change without notice.

739 LTFL

MALE ADAPTER TUBE TO AN

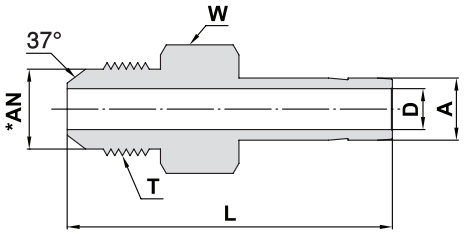

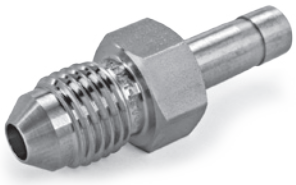

TUBE (INCH) TO TUBE (INCH)

Ordering Information	A Tube O.D.		*AN Thread Flare Size		D		W		L		T Straight Thread
	inch	mm	inch	mm	inch	mm	inch	mm	inch	mm	
739LTFL _ 1/4 X 1/4	1/4	6.35	1/4	6.35	.17	4.20	1/2	12.7	1.46	37.08	7/16-20
739LTFL _ 3/8 X 1/4	3/8	9.52	1/4	6.35	.17	4.20	1/2	12.7	1.53	38.86	7/16-20
739LTFL _ 3/8 X 3/8	3/8	9.52	3/8	9.52	.28	7.11	5/8	15.9	1.56	39.62	9/16-18
739LTFL _ 1/2 X 1/2	1/2	12.7	1/2	12.7	.39	9.90	13/16	20.6	1.91	48.51	3/4-16
739LTFL _ 5/8 X 5/8	5/8	15.87	5/8	15.87	.484	12.30	15/16	23.8	2.10	53.20	7/8-14
739LTFL _ 3/4 X 3/4	3/4	19.05	3/4	19.05	.59	15.00	1 1/8	28.6	2.21	56.13	1 1/16-12
739LTFL _ 1 X 1	1	25.40	1	25.40	.80	20.32	1 3/8	34.9	2.58	65.53	1 5/16-12

* Flare 37° per SAE J514.

"**D**" - Dimension is minimum opening. Dimensions are for reference only, and are subject to change without notice.

961 L
MALE NUT
(INCH)

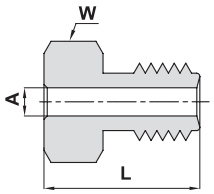

Ordering Information	A Tube O.D.		W Hex. Flat	L	
	inch	mm	inch	inch	mm
961L _ 1/16	1/16	1.58	1/4	.38	9.50

962 L
UNION
(INCH)

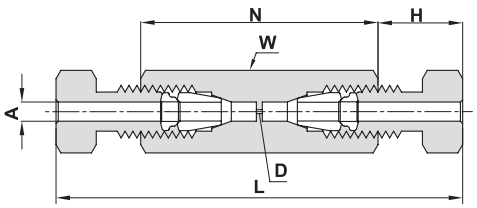

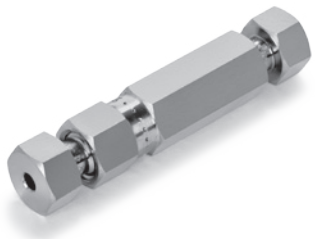

Ordering Information	A Tube O.D.		D		W Hex. Flat	N		H		L		Dead Space
	inch	mm	inch	mm	inch	inch	mm	inch	mm	inch	mm	
962L _ 1/16	1/16	1.58	.013	.33	1/4	.84	21.34	.20	5.08	1.25	31.75	6.6 X 10^{-5}CC

963 L
REDUCING UNION
(INCH)

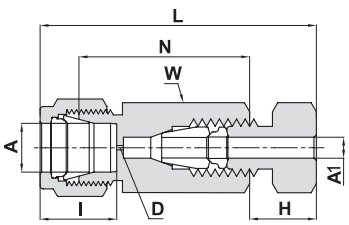

Ordering Information	A Tube O.D.		A1 Tube O.D.		D		W Hex. Flat	N		L		H		I		Dead Space
	inch	mm	inch	mm	inch	mm	inch	inch	mm	inch	mm	inch	mm	inch	mm	
963L _ 1/4 X 1/16	1/4	6.35	1/16	1.58	.013	.33	1/2	.75	19.05	1.24	31.50	.20	5.08	.60	15.2	6.8 X 10^{-5}CC
963L _ 3/8 X 1/16	3/8	9.52	1/16	1.58	.013	.33	5/8	.81	20.57	1.30	33.02	.20	5.08	.66	16.8	6.8 X 10^{-5}CC

964 L
UNION TEE
(INCH)

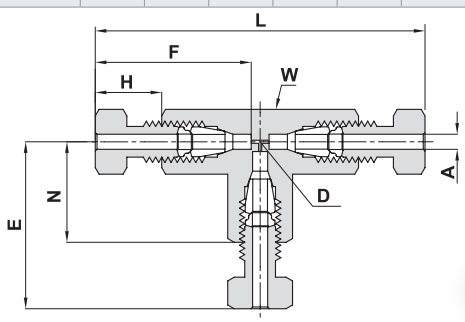

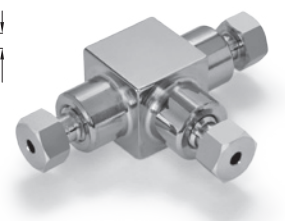

Ordering Information	A Tube O.D.		D		W Wrench Flat		N		H		F		E		L		Dead Space
	inch	mm	inch	mm	inch	mm	inch	mm	inch	mm	inch	mm	inch	mm	inch	mm	
964L _ 1/16	1/16	1.58	.013	.33	3/8	9.52	.45	11.43	.20	5.08	.61	15.49	.65	16.51	1.30	33.02	2.8 X 10^{-4}CC

"**D**" - Dimension is minimum opening. Dimensions are for reference only, and are subject to change without notice.

769 LOB
MALE ELBOW

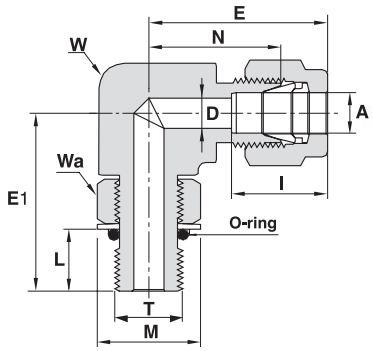

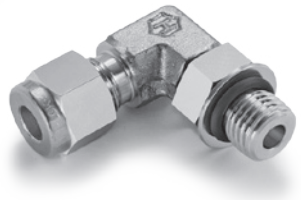

TUBE TO SAE/MS STRAIGHT THREAD BOSS (POSITIONABLE)*																					
Ordering Information	A Tube O.D.		T SAE/MS	D		W Wrench Flat		Wa Hex. Flat	N		E		E1		L		M		I		O-ring**
	inch	mm	inch	inch	mm	inch	mm	inch	inch	mm	inch	mm	inch	mm	inch	mm	inch	mm	inch	mm	Dash No.
769LOB SS 1/4 X 7/16-20 POS.	1/4	6.35	7/16-20	.19	4.8	1/2	12.7	9/16	.83	21.10	1.12	28.45	1.12	28.45	.39	9.9	.65	16.5	.60	15.2	-904
769LOB SS 1/4 X 9/16-18 POS.	1/4	6.35	9/16-18	.19	4.8	5/8	15.9	11/16	.91	23.11	1.20	30.48	1.27	32.26	.44	11.2	.79	20.1	.60	15.2	-906
769LOB SS 3/8 X 7/16-20 POS.	3/8	9.52	7/16-20	.20	5.1	5/8	15.9	9/16	.97	24.64	1.26	32.00	1.12	28.45	.39	9.9	.65	16.5	.66	16.8	-904
769LOB SS 3/8 X 9/16-18 POS.	3/8	9.52	9/16-18	.28	7.1	5/8	15.9	11/16	.97	24.64	1.26	32.0	1.27	32.26	.44	11.2	.79	20.1	.66	16.8	-906
769LOB SS 3/8 X 3/4-16 POS.	3/8	9.52	3/4-16	.28	7.1	13/16	20.6	7/8	1.08	27.43	1.37	34.80	1.49	37.85	.50	12.7	1.01	25.7	.66	16.8	-908
769LOB SS 1/2 X 9/16-18 POS.	1/2	12.70	9/16-18	.28	7.1	13/16	20.6	11/16	1.08	27.43	1.48	37.59	1.38	35.05	.44	11.2	.79	20.1	.90	22.9	-906
769LOB SS 1/2 X 3/4-16 POS.	1/2	12.70	3/4-16	.41	10.4	13/16	20.6	7/8	1.08	27.43	1.48	37.59	1.49	37.85	.50	12.7	1.01	25.7	.90	22.9	-908
769LOB SS 3/4 X 1 1/16-12 POS.	3/4	19.05	1 1/16-12	.62	15.8	1 1/16	27.0	1 1/4	1.23	31.24	1.63	41.40	1.92	48.77	.66	16.8	1.44	36.7	.96	24.4	-912
769LOB SS 1 X 1 1/16-12 POS.	1	25.40	1 1/16-12	.62	15.8	1 3/8	34.9	1 1/4	1.51	38.35	1.99	50.55	2.05	52.07	.66	16.8	1.44	36.7	1.23	31.2	-912
769LOB SS 1 X 1 5/16-12 POS.	1	25.40	1 5/16-12	.88	22.3	1 3/8	34.9	1 1/2	1.51	38.35	1.99	50.55	2.11	53.59	.66	16.8	1.73	44.0	1.23	31.2	-916

769 LOB 45°
MALE ELBOW 45°

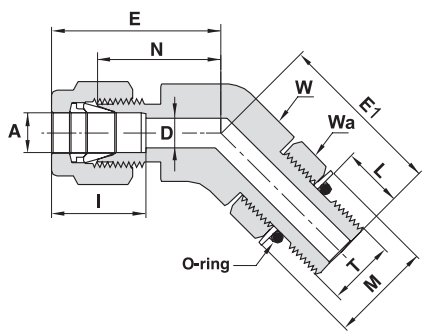

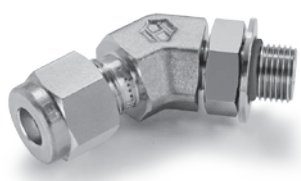

TUBE TO SAE/MS STRAIGHT THREAD BOSS (POSITIONABLE)*																					
Ordering Information	A Tube O.D.		T SAE/MS	D		W Wrench Flat		Wa Hex. Flat	N		E		E1		L		M		I		O-ring**
	inch	mm	inch	inch	mm	inch	mm	inch	inch	mm	inch	mm	inch	mm	inch	mm	inch	mm	inch	mm	Dash No.
769LAOB SS 1/4 X 7/16-20 POS.	1/4	6.35	7/16-20	.19	4.8	9/16	14.3	9/16	.72	18.29	1.01	25.65	1.01	25.65	.39	9.9	.65	16.5	.60	15.2	-904
769LAOB SS 3/8 X 9/16-18 POS.	3/8	9.52	9/16-18	.28	7.1	13/16	20.6	11/16	.81	20.57	1.10	27.94	1.06	27.00	.44	11.2	.79	20.1	.66	16.8	-906

* Per SAE J1926 and MS 16142. See page 78 for mounting dimensions. ** O-rings used are Viton 90 Durometer. Other O-ring materials are available on request.
"D" - Dimension is minimum opening. Dimensions are for reference only, and are subject to change without notice.

771 LOB
MALE RUN TEE

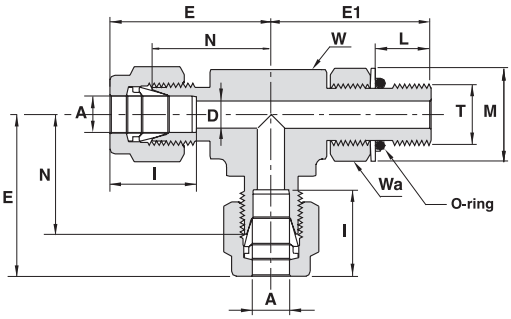

TUBE TO SAE/MS STRAIGHT THREAD BOSS (POSITIONABLE)*																					
Ordering Information	A Tube O.D.		T SAE/MS	D		W Wrench Flat		Wa Hex. Flat	N		E		E1		L		M		I		O-ring**
	inch	mm	inch	inch	mm	inch	mm	inch	inch	mm	inch	mm	inch	mm	inch	mm	inch	mm	inch	mm	Dash No.
771LOB SS 1/4 X 7/16-20 POS.	1/4	6.35	7/16-20	.19	4.8	1/2	12.7	9/16	.83	21.10	1.12	28.45	1.12	28.45	.39	9.9	.65	16.5	.60	15.2	-904
771LOB SS 3/8 X 9/16-18 POS.	3/8	9.52	9/16-18	.28	7.1	5/8	15.9	11/16	.97	24.64	1.26	32.00	1.27	32.26	.44	11.2	.79	20.1	.66	16.8	-906

* Per SAE J1926 and MS 16142. See page 78 for mounting dimensions.
** O-rings used are Viton 90 Durometer. Other O-ring materials are available on request.

772 LOB
MALE BRANCH TEE

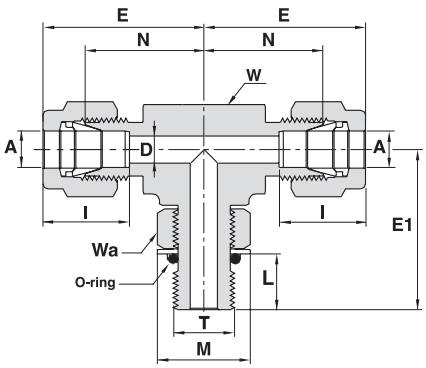

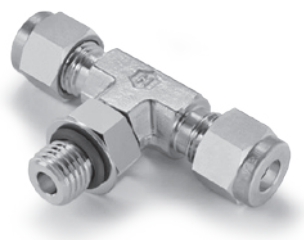

TUBE TO SAE/MS STRAIGHT THREAD BOSS (POSITIONABLE)*																					
Ordering Information	A Tube O.D.		T SAE/MS	D		W Wrench Flat		Wa Hex. Flat	N		E		E1		L		M		I		O-ring**
	inch	mm	inch	inch	mm	inch	mm	inch	inch	mm	inch	mm	inch	mm	inch	mm	inch	mm	inch	mm	Dash No.
772LOB SS 1/4 X 7/16-20 POS.	1/4	6.35	7/16-20	.19	4.8	1/2	12.7	9/16	.83	21.10	1.12	28.45	1.12	28.45	.39	9.9	.65	16.5	.60	15.2	-904
772LOB SS 3/8 X 9/16-18 POS.	3/8	9.52	9/16-18	.28	7.1	5/8	15.9	11/16	.97	24.64	1.26	32.00	1.27	32.26	.44	11.2	.79	20.1	.66	16.8	-906

* Per SAE J1926 and MS 16142. See page 78 for mounting dimensions.
** O-rings used are Viton 90 Durometer. Other O-ring materials are available on request.

"D" - Dimension is minimum opening. Dimensions are for reference only, and are subject to change without notice.

DIMENSIONS

FOR SAE J1926 & MS 16142 BOSS

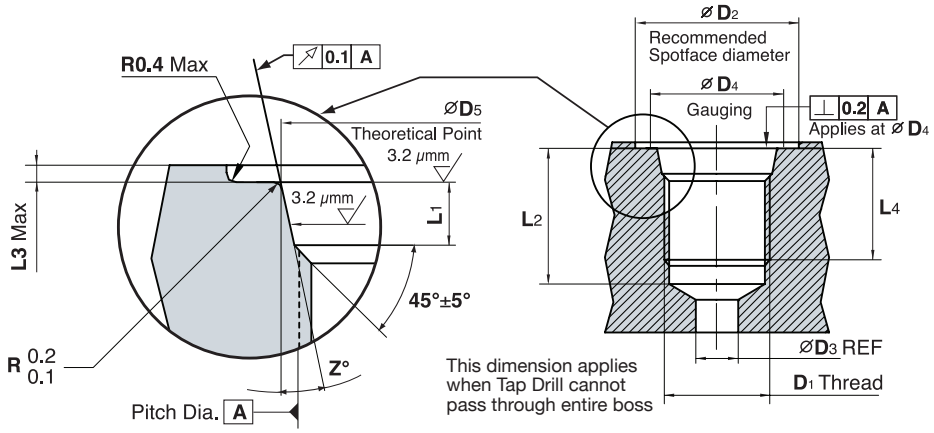

MOUNTING DIMENSIONS FOR O–SEAL CONNECTORS (SAE/MS)

TUBE O.D.		DI Thread Size	D2 Min Diameter ±0.05	D3 Min Diameter	D4 Min	D5 ±0.05	L1 ±0.20	L2 Min	L3 Max	L4 Min Full Thread	z° ±1°
inch	mm	inch	mm	mm	mm	mm	mm	mm	mm	mm	
1/8	3.17	5/16 - 24 UNF - 2B	17	1.6	11	9.15	2.1	12	1.6	10	12
3/16	4.76	3/8 - 24 UNF - 2B	19	3.5	13	10.75	2.1	12	1.6	10	12
1/4	6.35	7/16 - 20 UNF - 2B	21	4.5	15	12.45	2.6	14	1.6	11.5	12
5/16	7.93	1/2 - 20 UNF - 2B	23	6	16	14.05	2.6	14	1.6	11.5	12
3/8	9.52	9/16 - 18 UNF- 2B	25	7.5	18	15.70	2.7	15.5	1.6	12.7	12
1/2	12.70	3/4 - 16 UNF -2B	30	10	22	20.65	2.7	17.5	2.4	14.3	15
5/8	15.87	7/8 - 14 UNF - 2B	34	12.5	26	24	2.7	20	2.4	16.7	15
3/4	19.05	1 1/16 - 12 UNF - 2B	41	16	32	29.2	3.5	23	2.4	19	15
7/8	22.22	1 3/16 - 12 UN - 2B	45	18	35	32.4	3.5	23	2.4	19	15
1	25.40	1 5/16 - 12 UN - 2B	49	21	38	35.55	3.5	23	3.2	19	15
1 1/4	31.75	1 5/8 - 12 UN - 2B	58	27	48	43.55	3.5	23	3.2	19	15
1 1/2	38.10	1 7/8 - 12 UN - 2B	65	33	54	49.9	3.5	23	3.2	19	15
2	50.80	2 1/2 - 12 UN - 2B	88	45	70	65.75	3.5	23	3.2	19	15

INSTALLATION INSTRUCTIONS

Figure 1	Figure 2	Figure 3	Figure 4
Locking backed off	**Fitting install hand tight**	**Fittings backed-off for alignment (1 turn maximum)**	**Fitting locknut tight to appropriate torque**
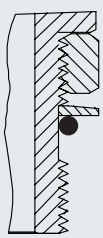	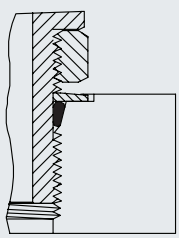	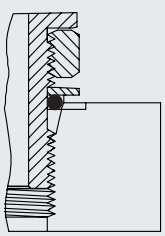	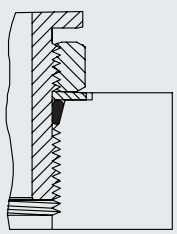
Lubricate the O-ring by inserting it into the groove adjacent to the face of the metal back-up washer which is assembled at the extreme end of the groove as shown in Figure 1.	Install the fitting into the S.A.E. straight thread boss, figure 2, until the metal back-up washer contacts the face of the boss as shown in Figure 2.	Position the fitting by turning it counter clockwise up to a maximum of one turn (see Figure 3).	Holding the pad of the fitting with a spanner, tighten the locknut and washer against the face as shown in Figure 4.

Dimensions are for reference only, and are subject to change without notice.

769 LG
MALE ELBOW

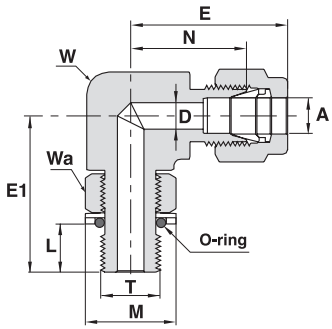

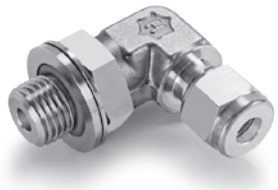

TUBE (METRIC) TO ISO PARALLEL THREAD (POSITIONABLE)*

Ordering Information	A Tube O.D.	T (ISO)	D	W Wrench Flat		Wa Hex. Flat	N	E	E1	L	M	I	O-ring**
	mm	inch	mm	inch	mm	inch	mm	mm	mm	mm	mm	mm	Dash No.
769LG SS 6 X 1/8 POS.	6	G-1/8-28	4.0	1/2	12.7	9/16	19.6	27.0	26.4	8.1	17.3	15.3	***
769LG SS 6 X 1/4 POS.	6	G-1/4-19	4.8	5/8	15.9	3/4	21.6	29.0	32.2	9.1	22.9	15.3	-111
769LG SS 8 X 1/8 POS.	8	G-1/8-28	4.0	5/8	15.9	9/16	21.3	28.8	27.4	8.1	17.3	16.2	***
769LG SS 8 X 1/4 POS.	8	G-1/4-19	5.9	5/8	15.9	3/4	22.4	29.9	32.2	9.1	22.9	16.2	-111
769LG SS 10 X 1/4 POS.	10	G-1/4-19	5.9	13/16	20.6	3/4	25.9	33.5	35.0	9.1	22.9	17.2	-111
769LG SS 10 X 3/8 POS.	10	G-3/8-19	7.9	13/16	20.6	7/8	25.9	33.5	37.1	9.4	26.4	17.2	-113
769LG SS 12 X 1/4 POS.	12	G-1/4-19	5.9	13/16	20.6	3/4	25.9	36.0	35.0	9.1	22.9	22.8	-111
769LG SS 12 X 3/8 POS.	12	G-3/8-19	7.9	13/16	20.6	7/8	25.9	36.0	37.1	9.4	26.4	22.8	-113
769LG SS 12 X 1/2 POS.	12	G-1/2-14	9.5	15/16	23.8	1 1/16	27.9	38.0	43.4	13.0	32.0	22.8	-593

TUBE (INCH) TO ISO PARALLEL THREAD (POSITIONABLE)*

Ordering Information	A Tube O.D.		T (ISO)	D		W Wrench Flat		Wa Hex. Flat	N		E		E1		L		M		I		O-ring**
	inch	mm	inch	inch	mm	inch	mm	inch	inch	mm	inch	mm	inch	mm	inch	mm	inch	mm	inch	mm	Dash No.
769LG SS 1/4 X 1/8 POS.	1/4	6.35	G-1/8-28	.16	4.0	1/2	12.7	9/16	.77	19.60	1.06	26.9	1.04	26.4	.32	8.1	.68	17.3	.60	15.2	***
769LG SS 1/4 X 1/4 POS.	1/4	6.35	G-1/4-19	.19	4.8	5/8	15.9	3/4	.85	21.60	1.14	28.9	1.27	32.2	.36	9.1	.90	22.9	.60	15.2	-111
769LG SS 1/4 X 1/2 POS.	1/4	6.35	G-1/2-14	.19	4.8	15/16	23.8	1 1/16	.96	24.38	1.25	31.8	1.71	43.4	.51	13.0	1.26	32.0	.60	15.2	-593
769LG SS 3/8 X 1/4 POS.	3/8	9.52	G-1/4-19	.23	5.9	5/8	15.9	3/4	.91	23.11	1.20	30.5	1.27	32.2	.36	9.1	.90	22.9	.66	16.8	-111
769LG SS 3/8 X 3/8 POS.	3/8	9.52	G-3/8-19	.28	7.1	13/16	20.6	7/8	1.02	25.91	1.31	33.3	1.46	37.1	.37	9.4	1.04	26.4	.66	16.8	-113
769LG SS 1/2 X 1/4 POS.	1/2	12.70	G-1/4-19	.23	5.9	13/16	20.6	3/4	1.02	25.91	1.42	36.1	1.27	32.2	.36	9.1	.90	22.9	.90	22.9	-111
769LG SS 1/2 X 3/8 POS.	1/2	12.70	G-3/8-19	.31	7.9	13/16	20.6	7/8	1.02	25.91	1.42	36.1	1.46	37.1	.37	9.4	1.04	26.4	.90	22.9	-113
769LG SS 1/2 X 1/2 POS.	1/2	12.70	G-1/2-14	.41	10.4	15/16	23.8	1 1/16	1.10	27.94	1.50	38.1	1.71	43.4	.51	13.0	1.26	32.0	.90	22.9	-593
769LG SS 5/8 X 1/2 POS.	5/8	15.87	G-1/2-14	.47	11.9	15/16	23.8	1 1/16	1.10	27.94	1.50	38.1	1.71	43.4	.51	13.0	1.26	32.0	.96	24.4	-593

* Per: DIN - ISO 228/1
BS - 2779
JIS - B0202
ISO - 228/1-BSP-P

** O-rings used are Viton 90 Durometer. Other O-ring materials are available on request.
*** Not standard O-ring size.
"**D**" - Dimension is minimum opening. Dimensions are for reference only, and are subject to change without notice.

769 LG 45°
MALE ELBOW 45°

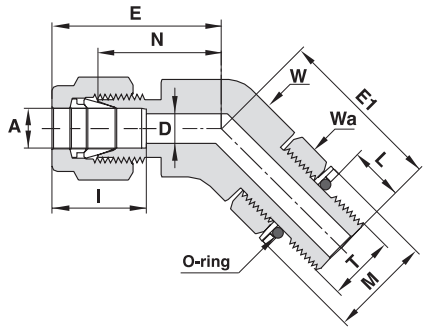

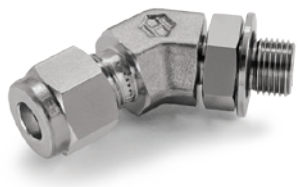

TUBE (METRIC) TO ISO PARALLEL THREAD (POSITIONABLE)*

Ordering Information	A Tube O.D.	T (ISO)	D	W Wrench Flat		Wa Hex. Flat	N	E	E1	L	M	I	O-ring**
	mm	inch	mm	inch	mm	inch	mm	mm	mm	mm	mm	mm	Dash No.
769LAG SS 6 X 1/8 POS.	6	G-1/8-28	4.0	9/16	14.3	9/16	17.5	24.9	24.0	8.1	17.3	15.3	***

TUBE (INCH) TO ISO PARALLEL THREAD (POSITIONABLE)*

Ordering Information	A Tube O.D.		T (ISO)	D		W Wrench Flat		Wa Hex. Flat	N		E		E1		L		M		I		O-ring**
	inch	mm	inch	inch	mm	inch	mm	inch	inch	mm	inch	mm	inch	mm	inch	mm	inch	mm	inch	mm	Dash No.
769LAG SS 1/4X1/8 POS.	1/4	6.35	G-1/8-28	.16	4.0	9/16	14.3	9/16	.69	17.5	.98	24.9	.94	24.0	.32	8.1	.68	17.3	.60	15.2	***

771 LG
MALE RUN TEE

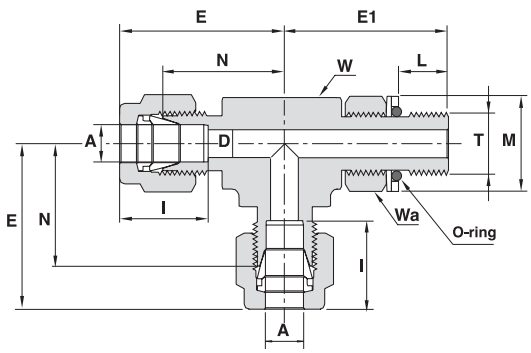

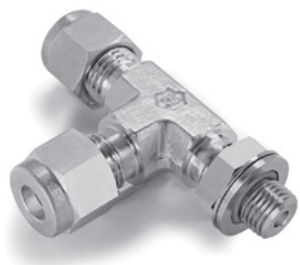

TUBE (METRIC) TO ISO PARALLEL THREAD (POSITIONABLE)*

Ordering Information	A Tube O.D.	T (ISO)	D	W Wrench Flat		Wa Hex. Flat	N	E	E1	L	M	I	O-ring**
	mm	inch	mm	inch	mm	inch	mm	mm	mm	mm	mm	mm	Dash No.
771LG SS 6 X 1/8 POS.	6	G-1/8-28	4.0	1/2	12.7	9/16	19.6	27.0	26.4	8.1	17.3	15.3	***
771LG SS 6 X 1/4 POS.	6	G-1/4-19	4.8	5/8	15.9	3/4	21.6	29.0	32.2	9.1	22.9	15.3	-111
771LG SS 8 X 1/4 POS.	8	G-1/4-19	5.9	5/8	15.9	3/4	22.4	29.9	32.2	9.1	22.9	16.2	-111
771LG SS 10 X 1/4 POS.	10	G-1/4-19	5.9	15/16	23.8	3/4	25.9	33.5	35.0	9.1	22.9	17.2	-111

TUBE (INCH) TO ISO PARALLEL THREAD (POSITIONABLE)*

Ordering Information	A Tube O.D.		T (ISO)	D		W Wrench Flat		Wa Hex. Flat	N		E		E1		L		M		I		O-ring**
	inch	mm	inch	inch	mm	inch	mm	inch	inch	mm	inch	mm	inch	mm	inch	mm	inch	mm	inch	mm	Dash No.
771LG SS 1/4 X 1/8 POS.	1/4	6.35	G-1/8-28	.16	4.0	1/2	12.7	9/16	.77	19.6	1.06	26.9	1.04	26.4	.32	8.1	.68	17.3	.60	15.2	***
771LG SS 1/4 X 1/4 POS.	1/4	6.35	G-1/4-19	.19	4.8	5/8	15.9	3/4	.85	21.6	1.14	28.9	1.27	32.2	.36	9.1	.90	22.9	.60	15.2	-111
771LG SS 3/8 X 1/4 POS.	3/8	9.52	G- 1/4-19	.23	5.9	5/8	15.9	3/4	.91	23.1	1.20	30.5	1.27	32.2	.36	9.1	.90	22.9	.66	16.8	-111

* Per: DIN - ISO 228/1
BS - 2779
JIS - B0202
ISO - 228/1-BSP-P

** O-rings used are Viton 90 Durometer. Other O-ring materials are available on request.
*** Not standard O-ring size.
"**D**" - Dimension is minimum opening. Dimensions are for reference only, and are subject to change without notice.

772 LG
MALE BRANCH TEE

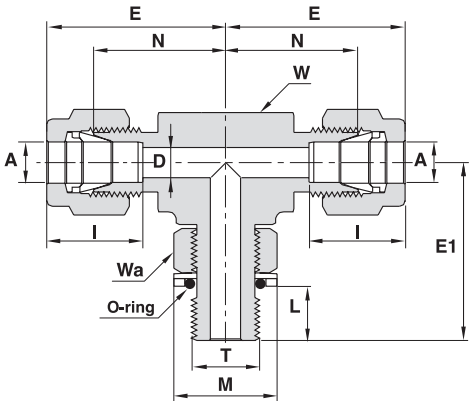

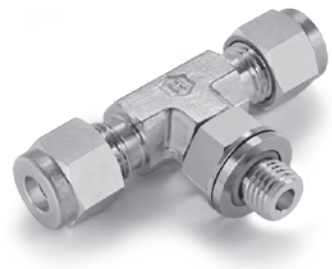

TUBE (METRIC) TO ISO PARALLEL THREAD (POSITIONABLE)*

Ordering Information	A Tube O.D.	T (ISO)	D	W Wrench Flat		Wa Hex. Flat	N	E	E1	L	M	I	O-ring**
	mm	inch	mm	inch	mm	inch	mm	mm	mm	mm	mm	mm	Dash No.
772LG SS 6 X 1/8 POS.	6	G-1/8-28	4.0	1/2	12.7	9/16	19.6	27.0	26.4	8.1	17.3	15.3	***
772LG SS 6 X 1/4 POS.	6	G-1/4-19	4.8	5/8	15.9	3/4	21.6	29.0	32.2	9.1	22.9	15.3	-111
772LG SS 8 X 1/4 POS.	8	G-1/4-19	5.9	5/8	15.9	3/4	22.4	29.9	32.2	9.1	22.9	16.2	-111
772LG SS 10 X 1/4 POS.	10	G-1/4-19	5.9	15/16	23.8	3/4	25.9	33.5	35.0	9.1	22.9	17.2	-111

TUBE (INCH) TO ISO PARALLEL THREAD (POSITIONABLE)*

Ordering Information	A Tube O.D.		T (ISO)	D		W Wrench Flat		Wa Hex. Flat	N		E		E1		L		M		I		O-ring**
	inch	mm	inch	inch	mm	inch	mm	inch	inch	mm	inch	mm	inch	mm	inch	mm	inch	mm	inch	mm	Dash No.
772LG SS 1/4 X 1/8 POS.	1/4	6.35	G-1/8-28	0.16	4.0	1/2	12.7	9/16	0.77	19.6	1.06	26.9	1.04	26.4	0.32	8.1	0.68	17.3	0.60	15.2	***
772LG SS 1/4 X 1/4 POS.	1/4	6.35	G-1/4-19	0.19	4.8	5/8	15.9	3/4	0.85	21.6	1.14	28.9	1.27	32.2	0.36	9.1	0.90	22.9	0.60	15.2	-111
772LG SS 3/8 X 1/4 POS.	3/8	9.52	G-1/4-19	0.23	5.9	5/8	15.9	3/4	0.91	23.1	1.20	30.5	1.27	32.2	0.36	9.1	0.90	22.9	0.66	16.8	-111

* Per: DIN - ISO 228/1
BS - 2779
JIS - B0202
ISO - 228/1-BSP-P

** O-rings used are Viton 90 Durometer. Other O-ring materials are available on request.
*** Not standard O-ring size.
"**D**" - Dimension is minimum opening. Dimensions are for reference only, and are subject to change without notice.

ISO PARALLEL THREAD PER B.S. 2779

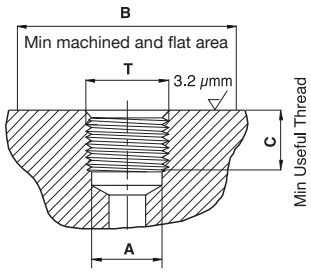

MOUNTING DIMENSIONS CONNECTORS

T Female	A Thread Minor Diameter				B Min Machined and Flat Area		C Min Uselful Thread	
	max		min					
	inch	mm	inch	mm	inch	mm	inch	mm
G-1/8-28	.337	8.566	.348	8.848	.68	17.3	.31	7.87
G-1/4-19	.450	11.445	.468	11.890	.90	22.9	.47	11.94
G-3/8-19	.588	14.950	.606	15.395	1.04	26.4	.47	11.94
G-1/2-14	.733	18.631	.755	19.172	1.26	32.0	.55	13.97

INSTALLATION INSTRUCTIONS

Figure 1	Figure 2	Figure 3	Figure 4
Locking backed off	**Fitting install hand tight**	**Fittings backed-off for alignment (1 turn maximum)**	**Fitting locknut tight to appropriate torque**
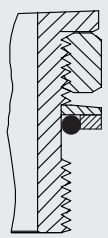	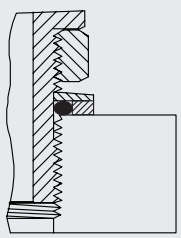	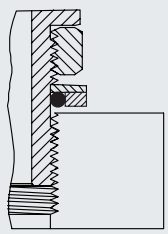	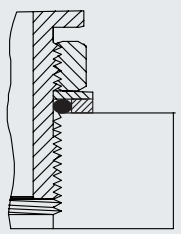
Lubricate O-ring by inserting it in the groove adjacent to the face of the metal back-up washer which is assembled at the extreme end of the groove as shown in Figure 1.	Install the fitting into the S.A.E. straight thread boss, Figure 2, untill the metal back-up washer contacts the face of the boss as shown in Figure 2.	Position the fitting by turning counter clockwise up to maximum of one turn. See Figure 3.	Holding the pad of the fitting with a wrench, tighten the locknut and washer against the face as shown in Figure 4.

HAM-LET DIELECTRIC FITTINGS

Dielectric fittings are designed to insulate subsystems from electrical current, voltages and static charges

MATERIAL OF CONSTRUCTION

1. Body: A.I.S.I. 316.
2. Insulators: Polyamide-Imide.
3. O-Ring: Viton 70 Durometer.
4. Ring: PTFE.

WORKING CONDITIONS:

1. Pressure rating: 5000 psi
2. Temperature rating: -40°c to 93°c (-40°F to 200°F).
3. Electrical resistance at 20°c-25°c (68°F-77°F): $10X10^6\Omega$ at 30V DC.

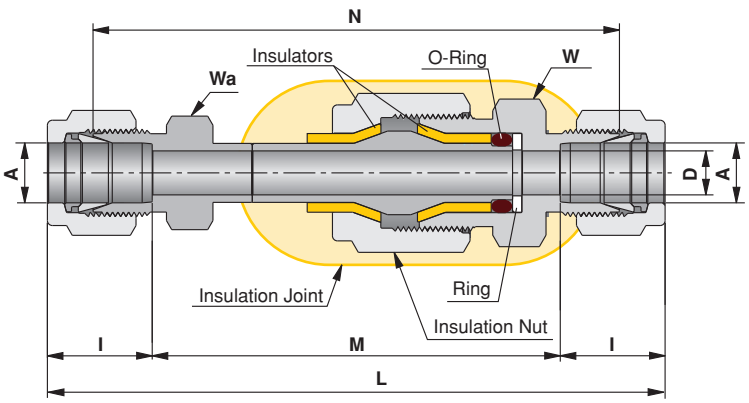

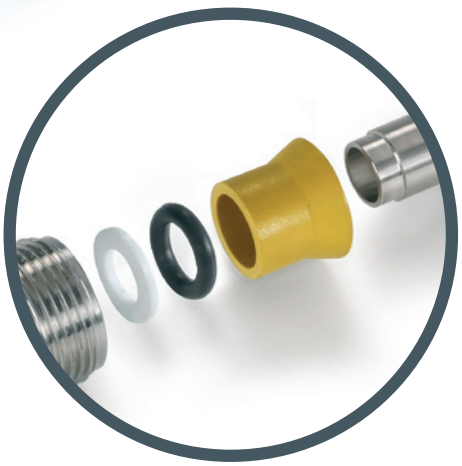

TUBE (METRIC) TO TUBE (METRIC)

Ordering Information	A Tube O.D.	D	W Hex. Flat	Wa Hex. Flat	M	I	N	L
	mm	mm	mm	mm	mm	mm	mm	mm
762L _ 10 mm Dielectric	10	7.1	22	18	65.85	17.2	84.85	100.3
762L _ 12 mm Dielectric	12	7.1	22	22	61.70	22.8	87.10	107.3

TUBE (INCH) TO TUBE (INCH)

Ordering Information	A Tube O.D.		D		W Hex. Flat	Wa Hex. Flat	M		I		N		L	
	inch	mm	inch	mm	inch	inch	inch	mm	inch	mm	inch	mm	inch	mm
762L _ 1/8 Dielectric	1/8	3.17	.09	2.28	13/16	1/2	2.56	65.10	.50	12.7	3.07	77.94	3.59	9.11
762L _ 1/4 Dielectric	1/4	6.35	.19	4.80	13/16	1/2	2.57	65.30	.60	15.2	3.19	81.02	3.77	95.8
762L _ 3/8 Dielectric	3/8	9.52	.28	7.11	13/16	5/8	2.59	65.80	.66	16.8	3.34	84.87	3.92	99.6
762L _ 1/2 Dielectric	1/2	12.70	.28	7.11	13/16	13/16	2.37	60.20	.90	22.9	3.37	85.68	4.17	106.0

"**D**" - Dimension is minimum opening. Dimensions are for reference only, and are subject to change without notice.

TUBE (INCH) TO MALE NPT THREAD

Ordering Information	A Tube O.D.		T (NPT)	D		W Hex. Flat	Wa Hex. Flat	I		N		L	
	inch	mm	inch	inch	mm	inch	inch	inch	mm	inch	mm	inch	mm
768L _ 3/8 X 1/4 Dielectric	3/8	9.52	1/4	.28	7.11	7/8	5/8	.66	16.8	3.44	87.4	3.73	94.7

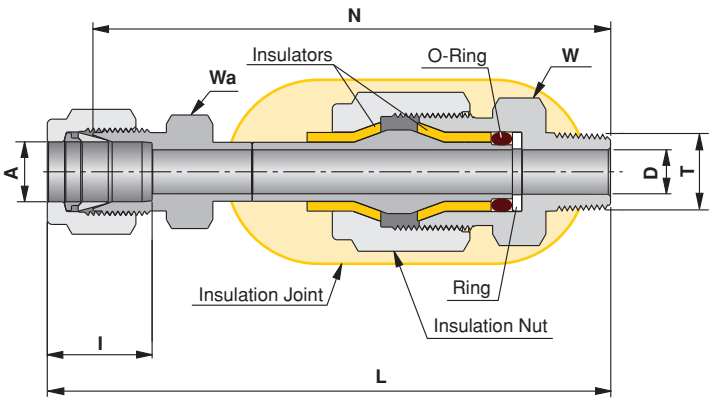

Assembly Instructions for Dielectric Fittings

1. Hold Hex A (Back-Up) and tighten nut A according to Let-Lok assembly instructions (see Let-Lok catalog for more information).
2. Hold Hex B (Back-Up) and tighten nut B according to the Let-Lok assembly instructions.
   CAUTION: DO NOT LOOSEN the INSULATION NUT and DO NOT USE IT as a BACK UP HEX.

Notes:

1. If end connection is Taper Pipe Thread - apply pipe sealant on thread and use hex A or B as wrenching or as Backup hex.
2. For additional types of end connection, please contact your authorized Ham-Let representative.

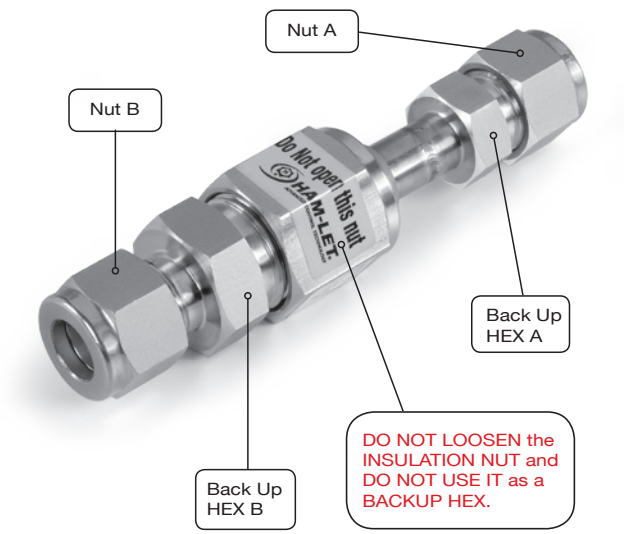

Warning! For Your Safety

The system designer and user have the sole responsibility to select products suitable for their special application requirements and to ensure the proper installation, operation and maintenance of the product. Please consider application details, material compatibility and product ratings when making your selection. Improper selection or use of products can cause property damage or personal injury.

"**D**" - Dimension is minimum opening. Dimensions are for reference only, and are subject to change without notice.

HAM-LET
MONEL® NICKEL-COPPER
ALLOY 400/R-405
CONNECTORS

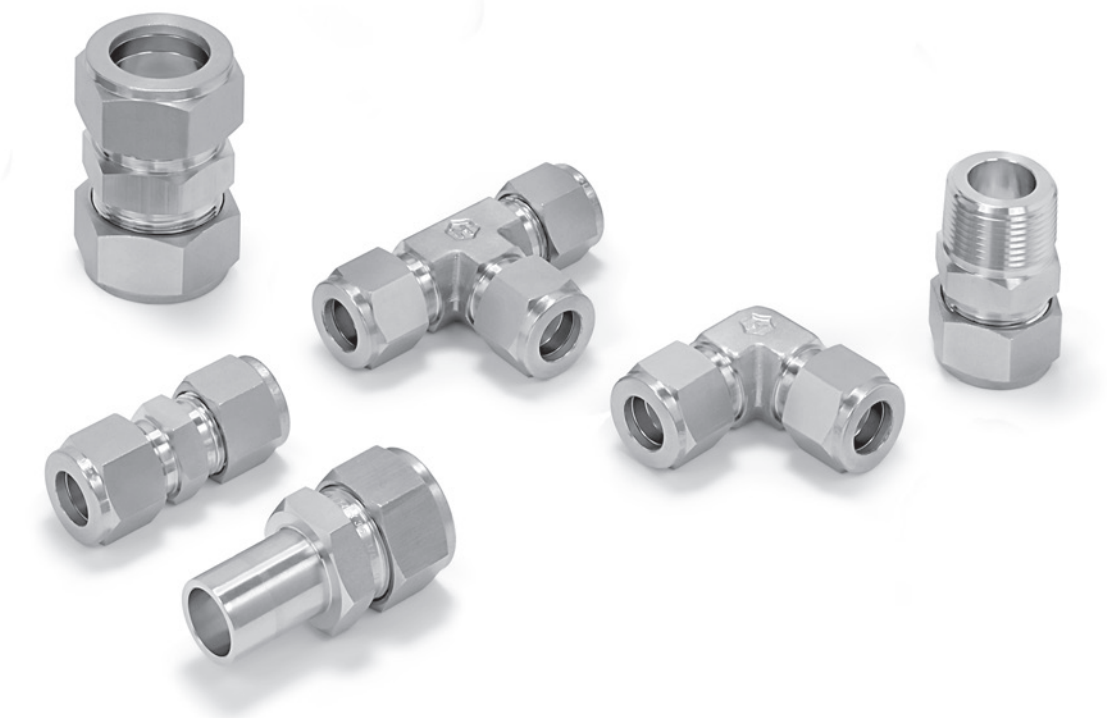

Monel nickel-copper alloy 400 is a solid-solution alloy that can be hardened only by cold working. It has high strength and toughness over a wide temperature range and excellent resistance to many corrosive environments. Alloy 400 is widely used in many fields, especially marine and chemical processing.

MONEL MATERIAL STD	
Barstock	Forging
ASTM B 164	ASTM B 564

760LB - Back Ferrule*

Ordering info.	Tube O.D.
760LB M 1/4	1/4
760LB M 3/8	3/8
760LB M 1/2	1/2

760LF - Front Ferrule*

Ordering info.	Tube O.D.
760LF M 1/4	1/4
760LF M 3/8	3/8
760LF M 1/2	1/2

761L - Nut

Ordering info.	Tube O.D.
761L M 1/4	1/4
761L M 3/8	3/8
761L M 1/2	1/2

762L - Union

Ordering info.	Tube O.D.
762L M 1/4	1/4
762L M 3/8	3/8
762L M 1/2	1/2

764L - Union Tee

Ordering info.	Tube O.D.
764L M 1/4	1/4
764L M 3/8	3/8
764L M 1/2	1/2

765L - Union Elbow

Ordering info.	Tube O.D.
765L M 1/4	1/4
765L M 3/8	3/8
765L M 1/2	1/2

767LP - Port Connector

Ordering info.	Tube O.D.
767LP M 1/4	1/4
767LP M 3/8	3/8
767LP M 1/2	1/2

7108L - Cap

Ordering info.	Tube O.D.
7108L M 1/4	1/4
7108L M 3/8	3/8
7108L M 1/2	1/2

* All LET-LOK ferrules are available as sets.

Dimensions are for reference only, and are subject to change without notice.

ALLOY 400/R-405

774L - Bulkhead union

Ordering info.	Tube O.D.
774L M 1/4	1/4
774L M 3/8	3/8

7121L - Plug

Ordering info.	Tube O.D.
7121L M 1/4	1/4
7121L M 3/8	3/8
7121L M 1/2	1/2

767LT - Reducer

Ordering info.	Tube O.D.	Tube O.D.
767LT M 1/4 x 1/4	1/4	1/4
767LT M 1/4 x 3/8	1/4	3/8
767LT M 1/4 x 1/2	1/4	1/2
767LT M 3/8 x 1/4	3/8	1/4
767LT M 3/8 x 3/8	3/8	3/8
767LT M 3/8 x 1/2	3/8	1/2
767LT M 1/2 x 1/4	1/2	1/4
767LT M 1/2 x 3/8	1/2	3/8
767LT M 1/2 x 1/2	1/2	1/2

769L - Male Elbow

Ordering info.	Tube O.D.	Male pipe size
769L M 1/4 x 1/4	1/4	1/4
769L M 3/8 x 1/4	3/8	1/4
769L M 1/2 x 1/2	1/2	1/2

766L - Female Connector

Ordering info.	Tube O.D.	Female pipe size
766L M 1/4 x 1/4	1/4	1/4
766L M 3/8 x 1/4	3/8	1/4

739LF - Female Adapter

Ordering info.	Tube O.D.	Female pipe size
739LF M 1/4 x 1/8	1/4	1/8
739LF M 1/4 x 1/4	1/4	1/4
739LF M 1/4 x 1/2	1/4	1/2
739LF M 3/8 x 1/4	3/8	1/4
739LF M 3/8 x 1/2	3/8	1/2
739LF M 1/2 x 1/4	1/2	1/4
739LF M 1/2 x 1/2	1/2	1/2

768L - Male Connector

Ordering info.	Tube O.D.	Male pipe size
768L M 1/4 x 1/8	1/4	1/8
768L M 1/4 x 1/4	1/4	1/4
768L M 1/4 x 3/8	1/4	3/8
768L M 1/4 x 1/2	1/4	1/2
768L M 3/8 x 1/4	3/8	1/4
768L M 3/8 x 3/8	3/8	3/8
768L M 3/8 x 1/2	3/8	1/2
768L M 1/2 x 1/4	1/2	1/4
768L M 1/2 x 3/8	1/2	3/8
768L M 1/2 x 1/2	1/2	1/2
768L M 1/2 x 3/4	1/2	3/4

739LM - Male Adapter

Ordering info.	Tube O.D.	Male pipe size
739LM M 1/4 x 1/8	1/4	1/8
739LM M 1/4 x 1/4	1/4	1/4
739LM M 1/4 x 1/2	1/4	1/2
739LM M 3/8 x 1/4	3/8	1/4
739LM M 3/8 x 1/2	3/8	1/2
739LM M 1/2 x 1/4	1/2	1/4
739LM M 1/2 x 1/2	1/2	1/2

LET-LOK TUBING DATA FOR ALLOY 400

Alloy 400 tubes should be ordered according to ASTM B-165.
Hydraulic tubing is suitable for flaring and bending.

Tubing should be seamless and annealed. Hardness: 75 HRB maximum.

Tube O.D. **inch**	**0.028**	**0.035**	**0.049**	**0.065**
1/4	3700	4800	7000	9500
3/8		3100	4400	6100
1/2		2300	3200	4400

Allowable working pressure in psig at -20° to 100°F (-28° to 37°C)

GAS APPLICATION TUBING

Tube O.D.	**Min. Nominal wall thickness**
1/2”	.035”

Dimensions are for reference only, and are subject to change without notice.

HAM-LET HASTELLOY® ALLOY C-276 CONNECTORS

In aggressive/corrosive service, when nothing else works, many industries have traditionally turned to **HASTELLOY® C-276** alloy. Many years of outstanding performance in a variety of industrial applications have confirmed the advantages of using this alloy.

Excellent Resistance to Corrosion

HASTELLOY® C-276 alloy is a nickel-molybdenum-chromium wrought alloy that is generally considered a versatile corrosion-resistant alloy.

C-276 alloy has excellent resistance to localized corrosion and to both oxidizing and reducing media. Because of its versatility, C-276 alloy can be used where "upset" conditions are likely to occur in multipurpose plants. **HASTELLOY® C-276** alloy has excellent resistance to a wide variety of chemical process environments, including strong oxidizers such as ferric and cupric chlorides, hot contaminated media (organic and inorganic), chlorine, formic and acetic acids, acetic anhydride, and seawater and brine solutions. It is used in flue gas desulfurization systems because of its excellent resistance to sulfur compounds and chloride ions encountered in most scrubbers. **C-276** alloy has excellent resistance to pitting and to stress-corrosion cracking. It is also one of the few materials that withstands the corrosive effects of wet chlorine gas, hypochlorite and chlorine dioxide.

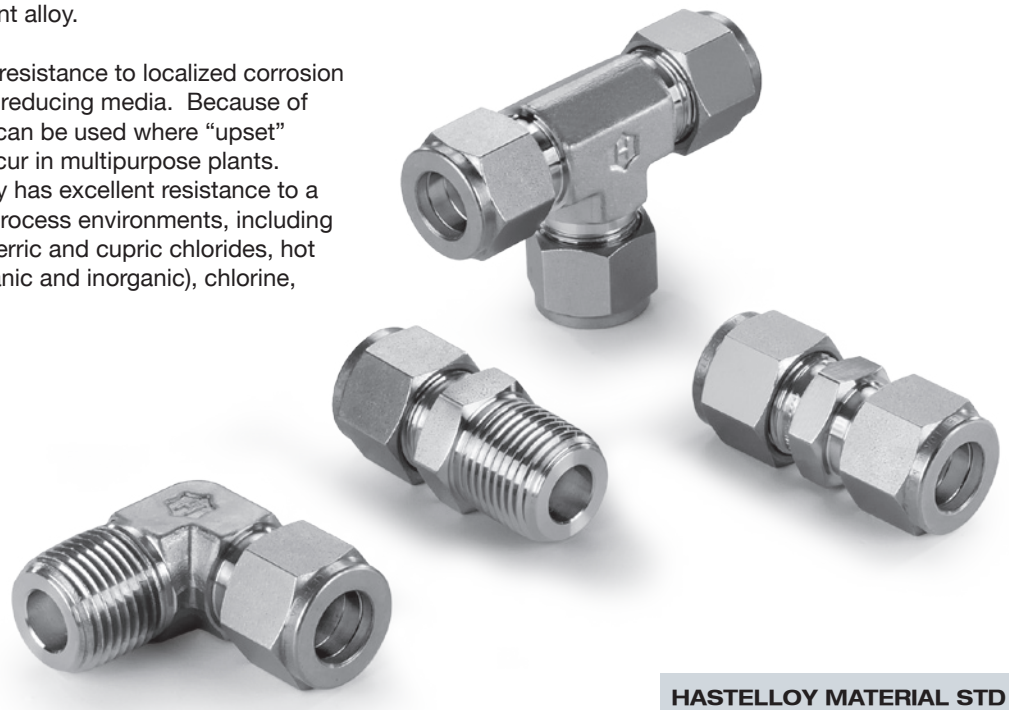

HASTELLOY MATERIAL STD	
Barstock	Forging
ASTM B574	ASTM B564

760LB - Back Ferrule*

Ordering info.	Tube O.D.
760LB HC 1/4	1/4
760LB HC 3/8	3/8
760LB HC 1/2	1/2

760LF - Front Ferrule*

Ordering info.	Tube O.D.
760LF HC 1/4	1/4
760LF HC 3/8	3/8
760LF HC 1/2	1/2

761L - Nut

Ordering info.	Tube O.D.
761L HC 1/4	1/4
761L HC 3/8	3/8
761L HC 1/2	1/2

762L - Union

Ordering info.	Tube O.D.
762L HC 1/4	1/4
762L HC 3/8	3/8
762L HC 1/2	1/2

764L - Union Tee

Ordering info.	Tube O.D.
764L HC 1/4	1/4
764L HC 3/8	3/8
764L HC 1/2	1/2

765L - Union Elbow

Ordering info.	Tube O.D.
765L HC 1/4	1/4
765L HC 3/8	3/8
765L HC 1/2	1/2

767LP - Port Connector

Ordering info.	Tube O.D.
767LP HC 1/4	1/4
767LP HC 3/8	3/8
767LP HC 1/2	1/2

7108L - Cap

Ordering info.	Tube O.D.
7108L HC 1/4	1/4
7108L HC 3/8	3/8
7108L HC 1/2	1/2

* All LET-LOK ferrules are available as sets.

Dimensions are for reference only, and are subject to change without notice.

ALLOY C-276

774L - Bulkhead union

Ordering info.	Tube O.D.
774L HC 1/4	1/4
774L HC 3/8	3/8

7121L - Plug

Ordering info.	Tube O.D.
7121L HC 1/4	1/4
7121L HC 3/8	3/8
7121L HC 1/2	1/2

767LT - Reducer

Ordering info.	Tube O.D.	Tube O.D.
767LT HC 1/4 x 1/4	1/4	1/4
767LT HC 1/4 x 3/8	1/4	3/8
767LT HC 1/4 x 1/2	1/4	1/2
767LT HC 3/8 x 1/4	3/8	1/4
767LT HC 3/8 x 3/8	3/8	3/8
767LT HC 3/8 x 1/2	3/8	1/2
767LT HC 1/2 x 1/4	1/2	1/4
767LT HC 1/2 x 3/8	1/2	3/8
767LT HC 1/2 x 1/2	1/2	1/2

769L - Male Elbow

Ordering info.	Tube O.D.	Male pipe size
769L HC 1/4 x 1/4	1/4	1/4
769L HC 3/8 x 1/4	3/8	1/4
769L HC 1/2 x 1/2	1/2	1/2

766L - Female Connector

Ordering info.	Tube O.D.	Female pipe size
766L HC 1/4 x 1/4	1/4	1/4
766L HC 3/8 x 1/4	3/8	1/4

739LF - Female Adapter

Ordering info.	Tube O.D.	Female pipe size
739LF HC 1/4 x 1/8	1/4	1/8
739LF HC 1/4 x 1/4	1/4	1/4
739LF HC 1/4 x 1/2	1/4	1/2
739LF HC 3/8 x 1/4	3/8	1/4
739LF HC 3/8 x 1/2	3/8	1/2
739LF HC 1/2 x 1/4	1/2	1/4
739LF HC 1/2 x 1/2	1/2	1/2

768L - Male Connector

Ordering info.	Tube O.D.	Male pipe size
768L HC 1/4 x 1/8	1/4	1/8
768L HC 1/4 x 1/4	1/4	1/4
768L HC 1/4 x 3/8	1/4	3/8
768L HC 1/4 x 1/2	1/4	1/2
768L HC 3/8 x 1/4	3/8	1/4
768L HC 3/8 x 3/8	3/8	3/8
768L HC 3/8 x 1/2	3/8	1/2
768L HC 1/2 x 1/4	1/2	1/4
768L HC 1/2 x 3/8	1/2	3/8
768L HC 1/2 x 1/2	1/2	1/2
768L HC 1/2 x 3/4	1/2	3/4

739LM - Male Adapter

Ordering info.	Tube O.D.	Male pipe size
739LM HC 1/4 x 1/8	1/4	1/8
739LM HC 1/4 x 1/4	1/4	1/4
739LM HC 1/4 x 1/2	1/4	1/2
739LM HC 3/8 x 1/4	3/8	1/4
739LM HC 3/8 x 1/2	3/8	1/2
739LM HC 1/2 x 1/4	1/2	1/4
739LM HC 1/2 x 1/2	1/2	1/2

LET-LOK TUBING DATA FOR ALLOY C-276

Alloy C-276 tubes should be ordered according to ASTM B-622.
Hydraulic tubing is suitable for flaring and bending.

Tubing should be seamless and annealed.
Hardness: 100 HRB maximum.

Tube O.D. **inch**	**0.035**	**0.049**	**0.065**
1/4	5100	7500	10200
3/8	3300	4800	6500
1/2	2600	3700	5100

GAS APPLICATION TUBING

Tube O.D.	Min. Nominal wall thickness
1/2”	.035”

Dimensions are for reference only, and are subject to change without notice.

ACCESSORIES

G-RAPID PLUS LOW FRICTION PASTE

INSTALLATION INSTRUCTIONS FOR LET-LOK® FITTINGS 38mm–50mm 1 1/4”–2”

1. Close the nut and ferrules on the tube with a hydraulic tool.
2. Open and release from the tool.
3. Apply the G-Rapid paste on areas A and B.
4. Tighten the nut on body 1/2 a turn with a wrench

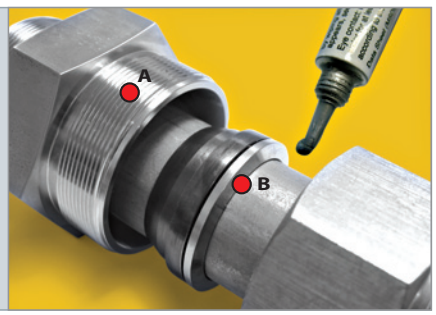

To order:
use part No. 3900753

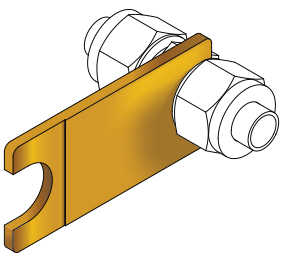

HIGH SAFETY

In applications where severe conditions and high pressure exist, we recommend the following installation procedures:

1. Check that the nut is finger tight.
2. Insert the tube (up to the shoulder).
3. Rotate the nut with a wrench until the tube does not rotate freely.
4. Mark position of the nut.
5. Rotate the nut 1-1/4 turns.

This method ensures that even if the tube O.D. is at the minimum tolerance, the ferrules will be in contact with the tube for the full 1-1/4 rotation.

GOLDEN GAUGE

SIZE:

GAUGE	
PART NO.	AVAILABLE ONLY IN
3900098	1/4” (6mm), 3/8”, 1/2” (12mm)

ADDITIONAL SIZES:

GOLDEN GAUGE	
PART NO.	LET–LOK SIZE
3901508	Golden Gauge 1/16”
3901509	Golden Gauge 1/8”–2–3 mm
3901510	Golden Gauge 3/16”– 4 mm
3901513	Golden Gauge 5/16”– 8 mm
3901511	Golden Gauge 10 mm
3901247	Golden Gauge 5/8”–14–15–16 mm
3901246	Golden Gauge 3/4”–18 mm
3901512	Golden Gauge 7/8”–20–22 mm
3901245	Golden Gauge 1”–25 mm

Dimensions are for reference only, and are subject to change without notice.

STAINLESS STEEL TUBE CUTTER

Ordering Information	Capacity	
	inch	mm
Tube Cutter	3/16–1	5–25
Replacement Wheel	3/16–1	5–25

REAMERS, DEBURRING TOOLS

Ordering Information	Capacity
In.Out.Reamer 1/4”–1 1/4”	1/4” (5mm) through 1 1/4” (36mm)
In.Out.Reamer 1/2”–2”	1/2” (12mm) through 2” (54mm)

LEVER TUBE BENDERS

Ordering Information	Capacity	
	Tube Size	Bend Radius
Lever Bender 3/16	3/16"	5/ 8"
Lever Bender 1/4	1/4"	5/8"
Lever Bender 5/16	5/16'	15/16"
Lever Bender 3/8	3/8"	15/16"
Lever Bender 1/2	1/2”	1 1/2"
Lever Bender 6	6mm	16mm
Lever Bender 8	8mm	24mm
Lever Bender 10	10mm	24mm
Lever Bender 12	12mm	38mm

HYDRAULIC PRE-ASSEMBLY TOOL

Ordering Information	Description	
HPAT– Large	Full large size tool – 1”, 11/4”, 11/2”	
HPAH – 1”	1”	Pre Assembly Head
HPAH – 1 1/4”	1 1/4”	
HPAH – 1 1/2”	1 1/2”	

TUBE HOLDERS

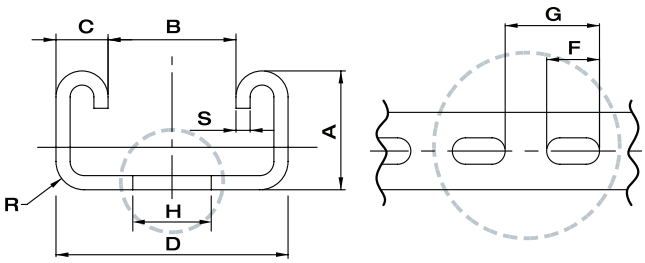

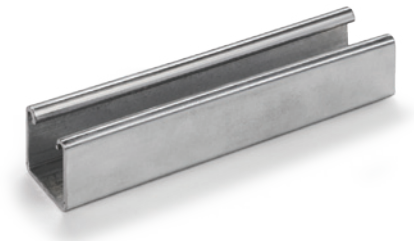

PERFORATED STAINLESS STEEL TUBE HOLDER SUPPORT										
HL / PN	A, mm	B, mm	C, mm	D, mm	L, m	S, mm	R, mm	F, mm	G, mm	H, mm
P–L–G	41.0	22.6	9.2	41.0	6.0	2.5	5.0	28.0	50.0	14.0
P–S–G	21.0	22.6	9.2	41.0	6.0	2.5	5.0	28.0	50.0	14.0
P–L–Z	41.0	22.6	9.2	41.0	6.0	2.5	5.0	28.0	50.0	14.0
P–S–Z	21.0	22.6	9.2	41.0	6.0	2.5	5.0	28.0	50.0	14.0

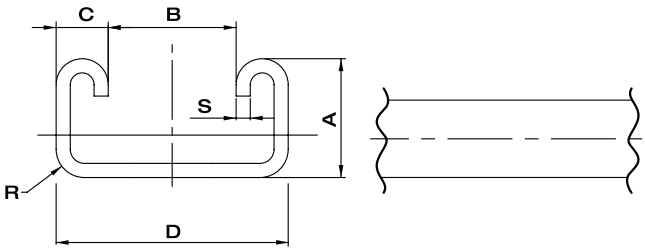

BLANK STAINLESS STEEL TUBE HOLDER SUPPORT							
HL / PN	A, mm	B, mm	C, mm	D, mm	L, m	S, mm	R, mm
B–L–G	41.0	22.6	9.2	41.0	6.0	2.5	5.0
B–S–G	21.0	22.6	9.2	41.0	6.0	2.5	5.0
B–L–Z	41.0	22.6	9.2	41.0	6.0	2.5	5.0
B–S–Z	21.0	22.6	9.2	41.0	6.0	2.5	5.0

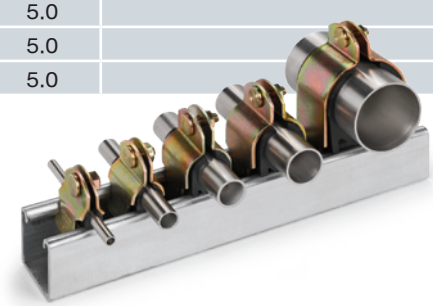

ORDERING INFORMATION

Perforation		Size		Finish Type	
P =	Perforated	S =	Small	Z =	Zink Coating Yellow
B =	Blank	L =	Large	G =	Hot dip galvanized

CLAMPED TUBE HOLDERS				
HL / PN	A, mm	B, mm	C, mm	D, mm
CTH–1/4	1/4	5.7	29.2	18.2
CTH–3/8	3/8	7.3	32.2	23.0
CTH–1/2	1/2	7.8	36.6	23.7
CTH–5/8	5/8	22.6	41.7	25.0
CTH–3/4	3/4	13.8	48.3	32.7
CTH–7/8	7/8	22.6	51.2	34.0
CTH–1	1	16.8	53.8	40.8
CTH–1 1/8	1–1/8	22.6	59.4	40.9
CTH–1 5/8	1–5/8	22.6	71.8	58.3
CTH– 2	2	30.4	82.0	64.1

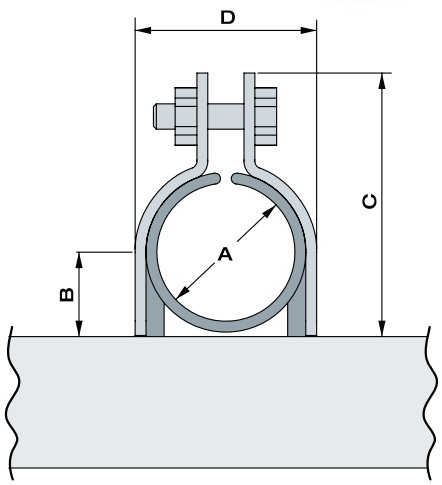

STOP COLLAR

LET-LOK	D	
inch	inch	mm
1/4	.69	17.5
3/8	.84	20.6
1/2	1.10	27.0
3/4	1.31	33.3
1	1.68	42.7

Assembly Instructions - Stop Collar

1. Remove the nut and ferrules from the fitting.
2. Insert the stop collar.
3. Assemble the nut and ferrules until finger tight.
4. Make up the fitting until the stop collar no longer rotates (feel with finger). At this stage it is guaranteed that the fitting is made up correctly.

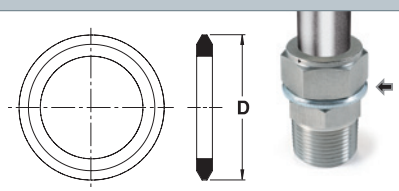

ORDERING INFORMATION FOR ASSEMBLED STOP COLLAR (WITH FITTING)

768L	SS	1/4		1/4	SC
Fitting Type	**SS** = Stainless Steel 316	**Tube O.D.**	**X**	**1/4 NPT**	**Stop Collar**
Male LET-LOK Connector Male End Connection	**B** = Brass **M** = Monel 400 **HC** = Hastelloy C-276	The O.D. size is always the first to be described			
	Fitting Material				

HOW TO ORDER STOP COLLAR ONLY

STOP COLLAR	1/4
Stop Collar	**Tube O.D.**
	The O.D. size is always the first to be described

Dimensions are for reference only, and are subject to change without notice.

SINGLE FERRULE FITTINGS

ONE-LOK®

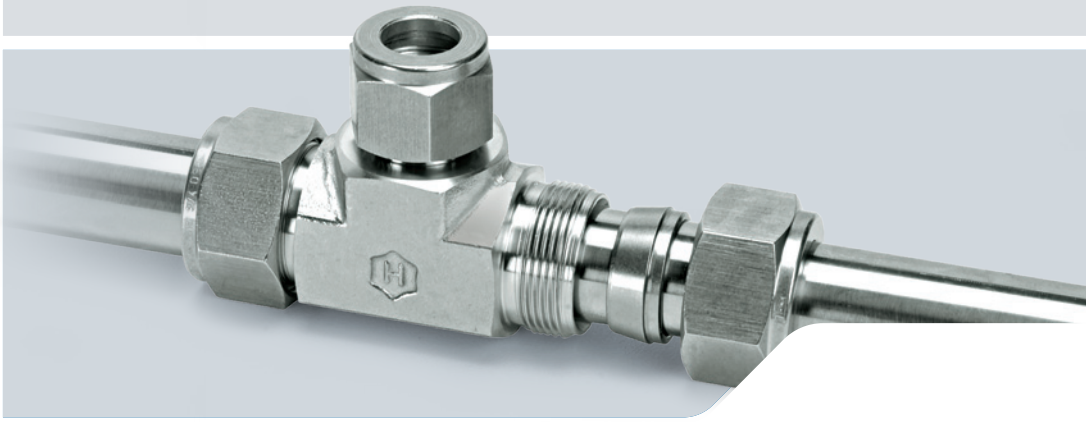

TUBE FITTINGS 1/16” THROUGH 1”

HAM-LET®
ADVANCED CONTROL TECHNOLOGY

THE PRINCIPLE

HAM-LET ONE-LOK is designed to provide leak-proof, secure connections that can withstand high pressure, vibration and vacuum applications. To this end, ONE-LOK tube fittings are made up of three parts that are precision engineered and machined: body, ferrule and nut.

APPLICATIONS

ONE-LOK is designed for use in control systems, process and instrumentation devices and in industrial equipment used in various applications. For example:

- Pulp & paper mills
- Petroleum process plants
- Chemical process plants
- Chromatography
- Power generation plants

ONE-LOK offers a simple, high-quality tube fitting with excellent performance and reliability.

MATERIALS

ONE-LOK standard single-ferrule fittings are offered in 316 Stainless Steel. Cold-drawn finished bar stock is machined to produce the straight fittings. Close-grain forgings are used for the machining of the shaped bodies. For other material options, please contact your HAM-LET distributor or HAM-LET on-line: www.ham-let.com

REMAKEABILITY

Owing to the single ferrule design, HAM-LET ONE-LOK tube fitting continues to perform through repeated remakes; the ONE-LOK single ferrule seal is leak-tight - remake after remake.

TEMPERATURE CHANGES

The ONE-LOK single ferrule is capable of bowing during make-up. This feature introduces a ‹live› element, allowing the device to maintain a leak-tight seal, despite expansion and contraction due to temperature changes.

UNIQUE HEAT CODE TRACING NUMBER (MATERIAL CODE)

HAM-LET stamps or etches all ONE-LOK stainless steel body fittings with a unique heat-code tracing number. This is particularly valuable for critical applications. Full documentation can be made available via this code in order to trace the St.St. material back to the original melt or cast.

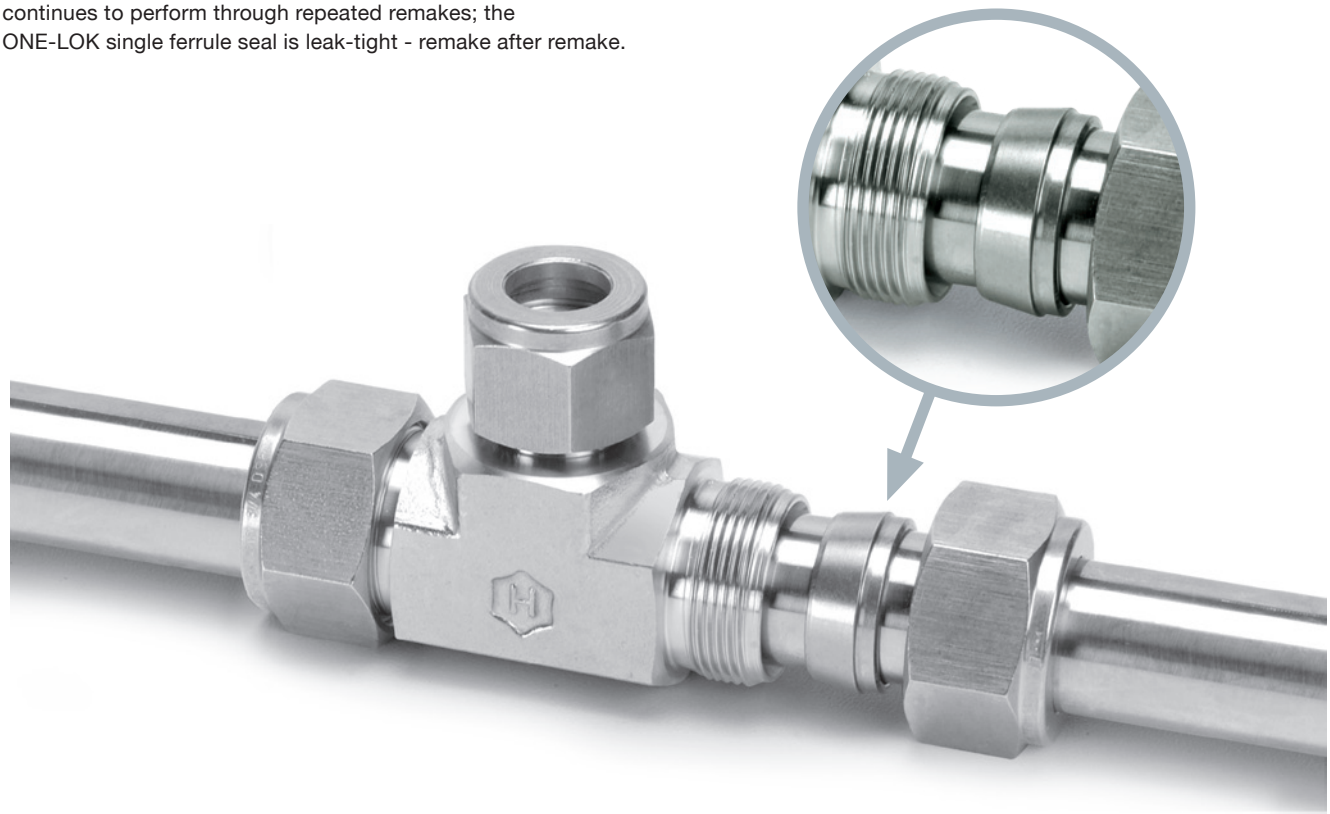

ONE-LOK TUBING SELECTION

To ensure the installation of safe, leak-free systems, it is important to choose the appropriate ONE-LOK single ferrule for your application. ONE-LOK fittings are engineered to the highest standards.

The table below lists tube sizes, which have been tested to bursting pressure with both maximum and minimum wall thickness.

Correctly assembled ONE-LOK fittings were installed and no leaks or other failures were noted at the connection points. If you plan to use tubing with different wall thicknesses than those noted in this chart, please contact the HAM-LET Technical Department for advice regarding the appropriate working pressure.

Note: Use fully annealed, high-quality stainless steel tubing of ASTM A269 or equivalent standard.

Working pressure: Based on laboratory and field tests using ASTM A269 tubing with a safety factor of 4:1 in a metal tempreture range of -20° to +100°c. However, it is the customer's responsibility to ensure safe product selection that is based upon the total system design and function.

For Stainless Steel Tubing Data, See page 9

INSTALLATION INSTRUCTIONS

ONE-LOK fittings are supplied assembled, finger tight. Disassembly before use can allow the entry of dirt or other particles.

1. Insert the tubing into the ONE-LOK fitting. Check that the tube rests firmly on the fitting shoulder and that the nut is finger tight.

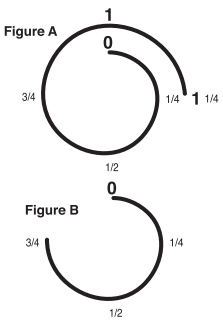

2. Tighten the nut. 1-1/4 turns of the nut is required for 1/4" (6 mm) and higher (See Figure A). 3/4 turns of the nut is required for 1/8" (See Figure B).

Reassembly instructions

ONE-LOK connections may be disconnected and remade repeatedly, without loss of leaktight seal.

1. Before disconnecting, mark the position of the nut in relation to the fitting body.
2. To reassemble, use a wrench to tighten nut to original position.
3. Tighten slightly with wrench until a slight rise in torque is felt.

Tube cutting

Two different methods can be used to cut tubes

1. Tube cutter
2. Hacksaw

Tube cutter

To attain a leak free connection, the tubing must be cut squarely. A good quality tube cutter with an appropriate blade for tubing material is recommended.

Do not try to reduce the time of cutting by taking deep cuts with each turn of the cutter. This will work harden the tube.

The end of the tube must be deburred to avoid damage to the fitting and to ensure that the tube reaches the bottom of the fitting.

Hacksaw cutting

In order to cut the tube with a hacksaw and get square ends, the tube must be cut with guide blocks.

This method of cutting necessitates deburring of the tube ends.

Warning

Do not hold the tube in a vise in the place where it will be inserted into the fitting (the vise will leave a mark on the tube that may cause leaks, and might cause ovality).

Tube handling

Scratches on the tube might cause leaks. It is therefore important to handle the tube carefully to reduce the risk of leaks.

Some precautions to be taken:

1. Tubes must not be dragged on the floor.
2. Tubes must not be dragged out of a tubing rack, especially in case of large OD tubes.

ONE-LOK ORDERING INFORMATION

ONE-LOK fitting part numbers are constructed from symbols that identify the type of material and size of the fitting.

The ONE-LOK part numbering system is the same as our LET-LOK Tube Fittings with the exception that you add an "H" between the prefix number and the "L" to designate the one ferrule design.

768HL	SS	1/4	X	1/4
Fitting type (male connector)	**SS** = Stainless Steel	Tube O.D.		1/4 NPT

The O.D. size is always the first to be described

HAM–LET PRECISION INSTRUMENT PIPE FITTINGS

PIPELINE

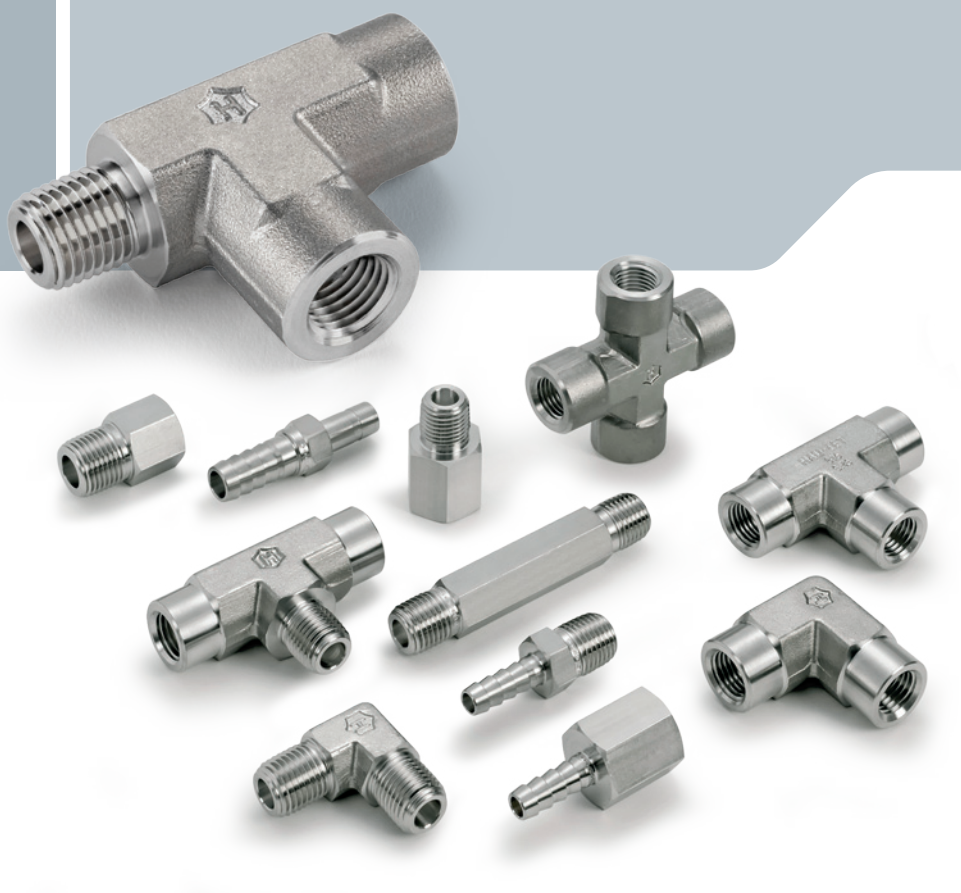

HAM-LET®
ADVANCED CONTROL TECHNOLOGY

GENERAL

The HAM-LET® Pipeline range of connectors is manufactured for typical applications in chemical and petrochemical processing plants, as well as oil, gas and power generation industries.

FEATURE

- Sizes range from 1/16” to 2”.
- Fittings are properly packaged with the exposed threads protected to ensure they are not damaged during delivery.
- All pipe threads meet the requirements of **ASME/ANSI B1.20.1** (1983) for tapered pipe threads (NPT).
- Working pressures are calculated in accordance with Power Piping Code **ANSI B 31.1**, Refiner Piping Code **ASME/ANSI B 31.3** and section VIII of **ASME** Boiler & Pressure Vessel Code.

PRESSURE RATINGS (PSI)

NPT or BSPT/ISO size	STAINLESS STEEL 316		BRASS	
inch	male	female	male	female
1/16	11000	6700	5500	3300
1/8	10000	6500	5000	3200
1/4	8000	6600	4000	3300
3/8	7800	5300	3900	2600
1/2	7700	4900	3800	2400
3/4	7300	4600	3600	2300
1	5300	4400	2600	2200
1 1/4	6000	5000	3000	2500
1 1/2	5000	4600	2500	2300
2	3900	3900	1900	1900

MATERIALS

MATERIAL	Specifications	
	Barstock	Forgings
STAINLESS STEEL 316	ASTM A-276	ASTM A-182
	ASTM A-479	
BRASS	ASTM B-453	ASME B-283
	ASTM B-16	
	DIN 176.60	

INSTALLATION INSTRUCTIONS

To ensure a leak-tight seal, HAM-LET® recommends the use of a pipe thread sealant on all NPT threads. The most effective sealing method is teflon tape. Tape should be used only on male tapered pipe threads.
Do not use tape on flared, coned or tube fitting ends!
Clean both male and female tapered threads. Wrap tape in the direction of the male tapered thread spiral.

Note: Two wraps are suggested for stainless steel tapered pipe threads. Make sure tape does not overhang the first thread, as the tape might shred and enter the fluid system. Cut off excess tape. The connection is now ready for proper makeup.

ORDERING INFORMATION

EXAMPLE: **120H** | **1/2** x **1/4**

Material Description	
SS -	Stainless Steel 316
B -	Brass

All orders should include ordering information and material description.

PIPELINE INDEX

ELBOW 100
100H

MALE ELBOW 100
100HM

TEE 100
101H

MALE TEE 101
101HM

CROSS 101
102H

HEX COUPLING 101
103H

UNION RECORD 102
104H

HOLLOW HEX PLUGS 102
107H

HOLLOW HEX PLUGS 102
SAE/MS STRAIGHT THREAD BOSS
107HOB

PIPE CAP 103
108H

REDUCING BUSHING 103
110H

REDUCING BUSHING 104
SAE/MS STRAIGHT THREAD BOSS
110HOB

HEX LONG NIPPLE 104
113H

STREET ELBOW 105
116H

HEX REDUCING COUPLING 105
119H

ADAPTER NPT 106
120H

ADAPTER 106
NPT FEMALE
TO MALE BSPT
120HNR

ADAPTER 107
FEMALE NPT
TO MALE BSPP
120HNG

ADAPTER 107
NPT TO SAE/MS STRAIGHT
THREAD BOSS
120HNOB

ADAPTER 107
FEMALE BSPT
TO MALE NPT
120HRN

GAUGE ADAPTER 108
FEMALE BSPP
TO MALE NPT
120HGN

PIPE PLUG NPT 108
121H

HEX HEAD PLUG 108
SAE/MS STRAIGHT
THREAD BOSS
121HOB

HEX NIPPLE 109
122H

HEX NIPPLE 109
MALE NPT
TO MALE BSPT
122HNR

HEX NIPPLE 110
MALE NPT
TO MALE BSPP
122HNG

HEX NIPPLE 110
NPT TO SAE/MS STRAIGHT BOSS
122HNOB

CLOSE NIPPLE 110
122HCN

REDUCING NIPPLE 111
123H

BRANCH TEE 111
3600H

STREET TEE 112
3750H

MALE HOSE CONNECTOR 112
130HM

FEMALE HOSE CONNECTOR 113
130HF

TUBE TO HOSE CONNECTOR 113
130LT

100 H
ELBOW

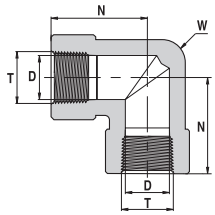

Ordering Information	T Female NPT size	N		D Min. Opening		W Wrench Flat
		inch	mm	inch	mm	inch
100H _ 1/8	1/8	1.04	26.4	0.31	7.8	5/8
100H _ 1/4	1/4	1.17	29.7	0.41	10.5	11/16
100H _ 3/8	3/8	1.42	36.1	0.56	14.2	15/16
100H _ 1/2	1/2	1.56	39.6	0.69	17.4	1 1/8
100H _ 3/4	3/4	1.92	48.8	0.90	22.9	1 3/8
100H _ 1	1	1.91	48.5	1.13	28.7	1 11/16

100 HM
MALE ELBOW

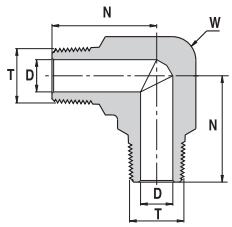

Ordering Information	T Male NPT Size	N		D Min. Opening		W Wrench Flat
		inch	mm	inch	mm	inch
100HM _ 1/8	1/8	0.88	22.4	0.19	4.8	1/2
100HM _ 1/4	1/4	1.05	26.7	0.28	7.1	5/8
100HM _ 3/8	3/8	1.17	29.7	0.38	9.6	13/16
100HM _ 1/2	1/2	1.45	36.8	0.47	11.9	15/16

101 H
TEE

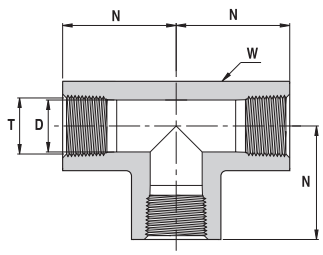

Ordering Information	A Female NPT Size	N		D Min. Opening		W Wrench Flat
		inch	mm	inch	mm	inch
101H _ 1/8	1/8	1.04	26.4	0.31	7.8	5/8
101H _ 1/4	1/4	1.17	29.7	0.41	10.5	13/16
101H _ 3/8	3/8	1.42	36.1	0.56	14.2	15/16
101H _ 1/2	1/2	1.56	39.6	0.69	17.4	1 1/8
101H _ 3/4	3/4	1.92	48.8	0.90	22.9	1 3/8
101H _ 1	1	1.91	48.5	1.13	28.7	1 11/16

Dimensions are for reference only, and are subject to change without notice.

101 HM
MALE TEE

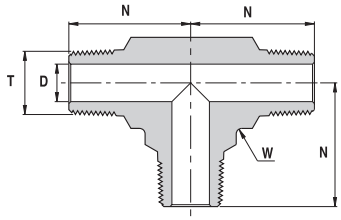

Ordering Information	T Male NPT Size	N		D Min. Opening		W Wrench Flat
		inch	mm	inch	mm	inch
101HM _ 1/8	1/8	0.88	22.4	0.19	4.8	1/2
101HM _ 1/4	1/4	1.05	26.7	0.28	7.1	5/8
101HM _ 3/8	3/8	1.17	29.7	0.38	9.6	13/16
101HM _ 1/2	1/2	1.45	36.8	0.47	11.9	15/16

102 H
CROSS

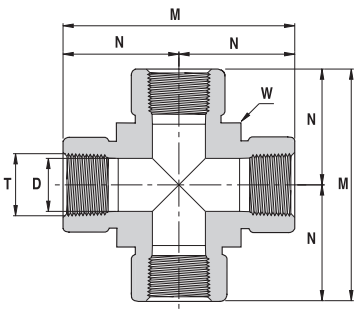

Ordering Information	T Female NPT Size	N		M		D Min. Opening		W Wrench Flat
		inch	mm	inch	mm	inch	mm	inch
102H _ 1/8	1/8	1.04	26.4	2.08	52.8	0.31	7.8	5/8
102H _ 1/4	1/4	1.17	29.7	2.34	59.4	0.41	10.5	11/16
102H _ 3/8	3/8	1.42	36.1	2.84	72.2	0.56	14.2	13/16
102H _ 1/2	1/2	1.56	39.6	3.12	79.2	0.69	17.4	1
102H _ 3/4	3/4	1.92	48.8	3.84	97.6	0.90	22.9	1 1/4
102H _ 1	1	1.91	48.5	3.82	97.0	1.13	28.7	1 11/16

103 H
HEX COUPLING

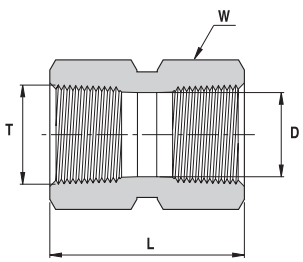

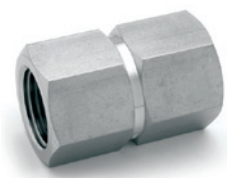

Ordering Information	T Female NPT size	L		D Min. Opening		W Hex. Flat
		inch	mm	inch	mm	inch
103H _ 1/8	1/8	0.81	20.6	0.31	7.8	9/16
103H _ 1/4	1/4	1.19	30.2	0.41	10.5	3/4
103H _ 3/8	3/8	1.31	33.3	0.56	14.2	7/8
103H _ 1/2	1/2	1.56	39.6	0.69	17.4	1 1/16
103H _ 3/4	3/4	1.62	41.1	0.90	22.9	1 5/16
103H _ 1	1	2.00	50.8	1.13	28.7	1 5/8

Dimensions are for reference only, and are subject to change without notice.

104 H
UNION RECORD

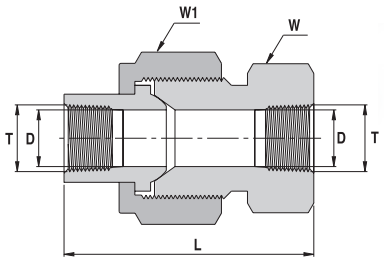

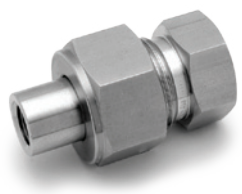

Ordering Information	T Female NPT Size	L		D Min. Opening		W Hex. Flat		W1 Hex. Flat
		inch	mm	inch	mm	inch	mm	inch
104H _ 1/8	1/8	1.81	46.0	0.27	6.9	15/16	23.81	1 1/8
104H _ 1/4	1/4	2.34	59.4	0.36	9.1	1 3/16	30.16	1 3/8
104H _ 3/8	3/8	2.50	63.5	0.52	13.2	1 5/16	33.34	1 1/2
104H _ 1/2	1/2	2.69	68.3	0.62	15.7	1 5/8	41.28	1 3/4
104H _ 3/4	3/4	3.12	79.2	0.87	22.1	1 7/8	47.63	2
104H _ 1	1	3.56	90.4	1.03	26.2	2 3/8	60.33	2 1/2

107 H
HOLLOW HEX PLUGS

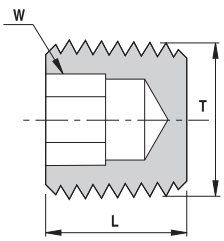

Ordering Information	T Male NPT Size	L		W Hex. Flat	
		inch	mm	inch	
107H _ 1/8	1/8	0.29	7.4	3/16	
107H _ 1/4	1/4	0.44	11.3	1/4	
107H _ 3/8	3/8	0.44	11.3	5/16	
107H _ 1/2	1/2	0.61	15.5	3/8	

107HOB
HOLLOW HEX PLUG SAE/MS STRAIGHT THREAD BOSS *

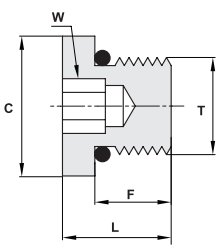

Ordering Information	T Straight Thread UN	L		F		C		W Hex. Flat	O-Ring**
		inch	mm	inch	mm	inch	mm	inch	
107HOB _ 7/16-20	7/16-20	0.45	11.4	0.36	9.1	0.56	14.2	3/16	-904
107HOB _ 1/2-20	1/2-20	0.45	11.4	0.36	9.1	0.63	15.9	3/16	-905
107HOB _ 9/16-18	9/16-18	0.48	12.2	0.39	9.9	0.69	17.5	1/4	-906
107HOB _ 3/4-16	3/4-16	0.56	14.2	0.44	11.2	0.88	22.4	5/16	-908

* Per SAE J1926 and MS 16142. See page 78 for mounting dimensions.
** O-rings used are Viton 90 Durometer. Other O-ring materials are available on request.
Dimensions are for reference only, and are subject to change without notice.

108 H
PIPE CAP

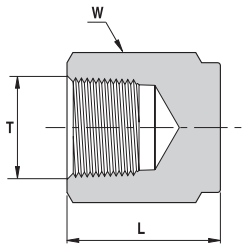

Ordering Information	T Female NPT Size	L		W Hex. Flat
		inch	mm	inch
108H _ 1/8	1/8	0.75	19.1	9/16
108H _ 1/4	1/4	0.91	23.1	3/4
108H _ 3/8	3/8	1.03	26.2	7/8
108H _ 1/2	1/2	1.34	34.0	1 1/16
108H _ 3/4	3/4	1.44	36.6	1 5/16
108H _ 1	1	1.62	41.1	1 5/8

110 H
REDUCING BUSHING

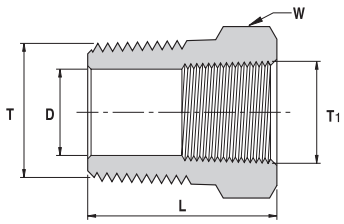

Ordering Information	T Male NPT Size	T1 Female NPT Size	L		D Min. Opening		W Hex. Flat
			inch	mm	inch	mm	inch
110H _ 1/8 X 1/16	1/8	1/16	1.03	26.2	0.19	4.8	7/16
110H _ 1/4 X 1/8	1/4	1/8	1.06	26.9	0.28	7.1	9/16
110H _ 3/8 X 1/8	3/8	1/8	0.86	21.8	0.34	8.6	11/16
110H _ 3/8 X 1/4	3/8	1/4	1.19	30.2	0.37	9.5	3/4
110H _ 1/2 X 1/8	1/2	1/8	1.08	27.4	0.34	8.6	7/8
110H _ 1/2 X 1/4	1/2	1/4	1.08	27.4	0.41	10.5	7/8
110H _ 1/2 X 3/8	1/2	3/8	1.41	35.8	0.47	11.9	7/8
110H _ 3/4 X 1/4	3/4	1/4	1.08	27.4	0.45	11.4	1 1/16
110H _ 3/4 X 3/8	3/4	3/8	1.08	27.4	0.56	14.2	1 1/16
110H _ 3/4 X 1/2	3/4	1/2	1.63	41.4	0.62	15.7	1 1/16
110H _ 1 X 1/4	1	1/4	1.37	34.8	0.41	10.5	1 3/8
110H _ 1 X 3/8	1	3/8	1.37	34.8	0.59	15.0	1 3/8
110H _ 1 X 1/2	1	1/2	1.37	34.8	0.69	17.4	1 3/8
110H _ 1 X 3/4	1	3/4	1.85	47.0	0.87	22.1	1 3/8
110H _ 1 1/4 X 1/2	1 1/4	1/2	1.46	37.1	0.73	18.5	1 3/4
110H _ 1 1/4 X 3/4	1 1/4	3/4	1.47	37.3	0.94	23.9	1 3/4
110H _ 1 1/4 X 1	1 1/4	1	1.94	49.3	1.17	29.7	1 3/4
110H _ 1 1/2 X 1/2	1 1/2	1/2	1.61	40.9	0.72	18.3	2 1/8
110H _ 1 1/2 X 3/4	1 1/2	3/4	1.61	40.9	0.90	22.9	2 1/8
110H _ 1 1/2 X 1	1 1/2	1	1.61	40.9	1.17	29.7	2 1/8
110H _ 1 1/2 X 1 1/4	1 1/2	1 1/4	2.31	58.7	1.50	38.1	2 1/8
110H _ 2 X 1/2	2	1/2	1.83	46.5	0.73	18.5	2 3/4
110H _ 2 X 3/4	2	3/4	1.83	46.5	0.94	23.9	2 3/4
110H _ 2 X 1	2	1	1.83	46.5	1.17	29.7	2 3/4
110H _ 2 X 1 1/4	2	1 1/4	1.83	46.5	1.50	38.1	2 3/4
110H _ 2 X 1 1/2	2	1 1/2	1.83	46.5	1.73	43.9	2 3/4

Dimensions are for reference only, and are subject to change without notice.

110HOB

REDUCING BUSHING SAE/MS STRAIGHT THREAD BOSS *

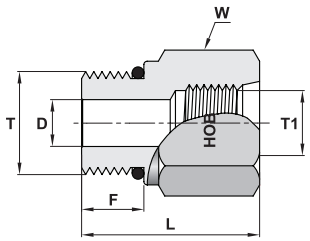

Ordering Information	T Straight Thread UN	T1 Straight Thread UN	D		L		F		W Hex. Flat	O-Ring**
			inch	mm	inch	mm	inch	mm	inch	
110HOB _ 9/16-18 X 7/16-20	9/16-18	7/16-20	0.28	7.1	1.12	28.4	0.36	9.1	13/16	-906
110HOB _ 3/4-16 X 7/16-20	3/4-16	7/16-20	0.24	6.0	1.30	33.0	0.44	11.2	15/16	-908
110HOB _ 3/4-16 X 9/16-18	3/4-16	9/16-18	0.42	10.7	1.19	30.2	0.44	11.2	1	-908
110HOB _ 3/4-16 X 7/8-14	3/4-16	7/8-14	0.42	10.7	1.60	40.6	0.44	11.2	1 1/2	-908
110HOB _ 7/8-14 X 9/16-18	7/8-14	9/16-18	0.50	12.7	1.10	27.9	0.50	12.7	1	-910
110HOB _ 7/8-14 X 3/4-16	7/8-14	3/4-16	0.50	12.7	1.42	36.1	0.50	12.7	1 3/16	-910
110HOB _ 1 1/16-12 X 3/4-16	1 1/16-12	3/4-16	0.65	16.5	1.27	32.3	0.59	15.0	1 1/4	-912
110HOB _ 1 5/16-12 X 1 1/16-12	1 5/16-12	1 1/16-12	0.87	22.1	1.61	40.9	0.59	15.0	1 5/8	-916
110HOB _ 1 5/8-12 X 1 5/16-12	1 5/8-12	1 5/16-12	1.09	27.7	1.98	50.3	0.59	15.0	2 1/8	-920
110HOB _ 1 7/8-12 X 1 5/16-12	1 7/8-12	1 5/16-12	1.23	31.2	1.27	32.3	0.59	15.0	2 1/8	-924

113 H

HEX LONG NIPPLE

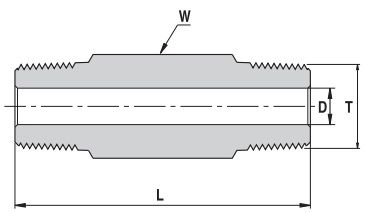

Ordering Information	T Male NPT Size	L Available Lengths (inch)						D Min. Opening		W Hex. Flat
		1.50	2.00	2.50	3.00	4.00	6.00	inch	mm	inch
113H _ 1/8 X 1.5 / 2 / 2.5 / 3	1/8	✓	✓	✓	✓	-	-	0.19	4.8	7/16
113H _ 1/4 X 1.5 / 2 / 2.5 / 3 / 4	1/4	✓	✓	✓	✓	✓	-	0.28	7.1	9/16
113H _ 3/8 X 1.5 / 2 / 2.5 / 3 / 4	3/8	✓	✓	✓	✓	✓	-	0.38	9.6	11/16
113H _ 1/2 X 2 / 3 / 4	1/2	-	✓	-	✓	✓	✓	0.47	11.9	7/8
113H _ 3/4 X 2 / 3 / 4	3/4	-	✓	-	✓	✓	-	0.62	15.8	1 1/16
113H _ 1 X 3 / 4	1	-	-	-	✓	✓	-	0.88	22.4	1 3/8

* Per SAE J1926 and MS 16142. See page 78 for mounting dimensions.
** O-rings used are Viton 90 Durometer. Other O-ring materials are available on request.
Dimensions are for reference only, and are subject to change without notice.

116 H
STREET ELBOW

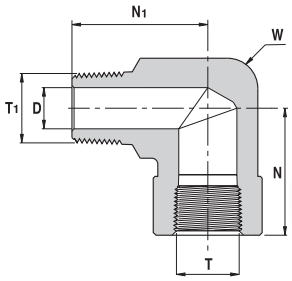

Ordering Information	T Female NPT Size	T1 Male NPT Size	N		N1		D Min. Opening		W Wrench Flat
			inch	mm	inch	mm	inch	mm	inch
116H _ 1/16 X 1/16	1/16	1/16	0.86	21.8	0.88	22.4	0.12	3.10	7/16
116H _ 1/8 X 1/16	1/8	1/16	1.04	26.4	0.87	22.1	0.12	3.10	5/8
116H _ 1/8 X 1/8	1/8	1/8	1.04	26.4	0.87	22.1	0.19	4.80	5/8
116H _ 1/4 X 1/8	1/4	1/8	1.17	29.7	1.00	25.4	0.19	4.80	11/16
116H _ 1/4 X 1/4	1/4	1/4	1.17	29.7	1.17	29.7	0.28	7.10	11/16
116H _ 3/8 X 1/4	3/8	1/4	1.42	36.1	1.26	32.0	0.28	7.10	15/16
116H _ 3/8 X 3/8	3/8	3/8	1.42	36.1	1.26	32.0	0.38	9.60	15/16
116H _ 1/2 X 1/4	1/2	1/4	1.56	39.6	1.38	35.1	0.28	7.10	1 1/8
116H _ 1/2 X 3/8	1/2	3/8	1.56	39.6	1.38	35.1	0.38	9.60	1 1/8
116H _ 1/2 X 1/2	1/2	1/2	1.56	39.6	1.56	39.6	0.47	11.9	1 1/8
116H _ 3/4 X 3/4	3/4	3/4	1.92	48.8	1.67	42.4	0.62	15.8	1 3/8
116H _ 1 X 1	1	1	1.83	46.5	1.94	49.3	0.86	21.8	1 11/16

119 H
HEX REDUCING COUPLING

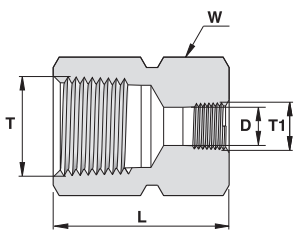

Ordering Information	T Female NPT Size	T1 Female NPT Size	L		D Min. opening		W Hex. Flat
			inch	mm	inch	mm	inch
119H _ 1/4 X 1/8	1/4	1/8	1.22	31.0	0.31	7.8	3/4
119H _ 3/8 X 1/4	3/8	1/4	1.38	35.1	0.41	10.5	7/8
119H _ 1/2 X 1/8	1/2	1/8	1.56	39.6	0.31	7.8	1 1/16
119H _ 1/2 X 1/4	1/2	1/4	1.75	44.5	0.41	10.5	1 1/16
119H _ 1/2 X 3/8	1/2	3/8	1.78	45.2	0.56	14.2	1 1/16
119H _ 3/4 X 1/4	3/4	1/4	1.81	46.0	0.41	10.5	1 5/16
119H _ 3/4 X 1/2	3/4	1/2	2.06	52.3	0.69	17.4	1 5/16
119H _ 1 X 1/2	1	1/2	2.19	55.6	0.69	17.4	1 5/8
119H _ 1 X 3/4	1	3/4	2.25	57.2	0.90	22.9	1 5/8

Dimensions are for reference only, and are subject to change without notice.

120 H
ADAPTER NPT

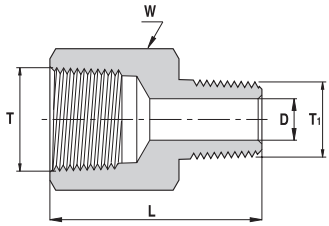

Ordering Information	T Female NPT Size	T1 Male NPT Size	L		D Min. Opening		W Hex. Flat
			inch	mm	inch	mm	inch
120H _ 1/8 X 1/16	1/8	1/16	1.09	27.7	0.12	3.0	9/16
120H _ 1/8 X 1/8	1/8	1/8	1.10	27.9	0.19	4.8	9/16
120H _ 1/4 X 1/8	1/4	1/8	1.26	32.0	0.19	4.8	3/4
120H _ 1/4 X 1/4	1/4	1/4	1.40	35.6	0.28	7.1	3/4
120H _ 3/8 X 1/8	3/8	1/8	1.33	33.8	0.19	4.8	7/8
120H _ 3/8 X 1/4	3/8	1/4	1.50	38.1	0.28	7.1	7/8
120H _ 3/8 X 3/8	3/8	3/8	1.51	38.4	0.38	9.6	7/8
120H _ 1/2 X 1/8	1/2	1/8	1.58	40.1	0.19	4.8	1 1/16
120H _ 1/2 X 1/4	1/2	1/4	1.76	44.7	0.28	7.1	1 1/16
120H _ 1/2 X 3/8	1/2	3/8	1.75	44.5	0.37	9.5	1 1/16
120H _ 1/2 X 1/2	1/2	1/2	1.94	49.3	0.47	11.9	1 1/16
120H _ 3/4 X 1/4	3/4	1/4	1.85	47.0	0.28	7.1	1 5/16
120H _ 3/4 X 3/8	3/4	3/8	1.82	46.2	0.37	9.5	1 5/16
120H _ 3/4 X 1/2	3/4	1/2	2.02	51.3	0.47	11.9	1 5/16
120H _ 3/4 X 3/4	3/4	3/4	2.02	51.3	0.62	15.8	1 5/16
120H _ 1 X 1/4	1	1/4	1.96	49.8	0.28	7.1	1 5/8
120H _ 1 X 1/2	1	1/2	2.16	54.9	0.47	11.9	1 5/8
120H _ 1 X 3/4	1	3/4	2.17	55.1	0.62	15.7	1 5/8
120H _ 1 X 1	1	1	2.28	57.9	0.86	21.8	1 5/8

120 HNR
ADAPTER NPT TO BSPT

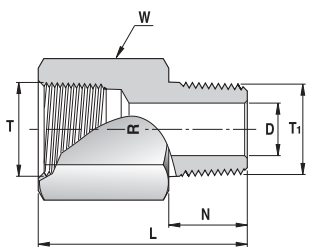

Ordering Information	T Female NPT Size	T1 Male BSPT ISO 7/1, BS21 Size	L		N		D Min. Opening		W Hex. Flat
			inch	mm	inch	mm	inch	mm	inch
120HNR _ 1/8	1/8	1/8-28	1.09	27.7	0.38	9.7	0.19	4.8	9/16
120HNR _ 1/4	1/4	1/4-19	1.42	36.1	0.56	14.2	0.28	7.1	3/4
120HNR _ 3/8	3/8	3/8-19	1.50	38.1	0.56	14.2	0.38	9.6	7/8
120HNR _ 1/2	1/2	1/2-14	1.94	49.3	0.75	19.0	0.47	11.9	1 1/16
120HNR _ 3/4	3/4	3/4-14	2.02	51.3	0.75	19.0	0.62	15.8	1 5/16
120HNR _ 1	1	1-11	2.30	58.4	0.94	23.9	0.88	22.4	1 5/8

Dimensions are for reference only, and are subject to change without notice.

120 HNG
ADAPTER NPT TO BSPP

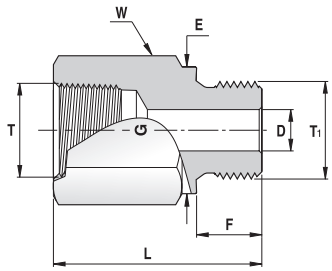

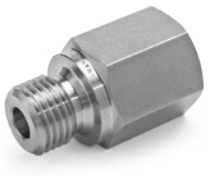

Ordering Information	T Female NPT Size	T1 Male BSPP ISO 228/1, BS 2779	L		F		E Dia.		D Min. Opening		W Hex. Flat
			inch	mm	inch	mm	inch	mm	inch	mm	inch
120HNG _ 1/8	1/8	1/8-28	0.99	25.1	0.28	7.1	0.54	13.8	0.16	4.1	9/16
120HNG _ 1/4	1/4	1/4-19	1.32	33.5	0.44	11.2	0.70	18.0	0.23	5.8	3/4
120HNG _ 3/8	3/8	3/8-19	1.41	35.8	0.44	11.2	0.85	21.8	0.31	7.9	7/8
120HNG _ 1/2	1/2	1/2-14	1.74	44.2	0.56	14.2	1.02	26.0	0.47	11.9	1 1/16
120HNG _ 3/4	3/4	3/4-14	1.89	48.0	0.62	15.7	1.26	32.0	0.62	15.7	1 5/16
120HNG _ 1	1	1-11	2.10	53.3	0.72	18.3	1.53	39.0	0.78	19.8	1 5/8

120HNOB
ADAPTER NPT TO SAE/MS STRAIGHT THREAD BOSS *

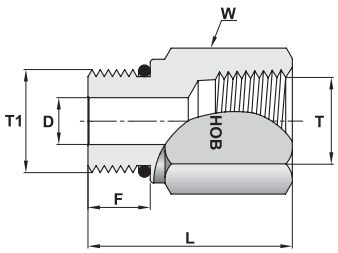

Ordering Information	T Female NPT Size	T1 Straight Thread UN	D		L		F		W Hex. Flat	O-Ring**
			inch	mm	inch	mm	inch	mm	inch	
120HNOB _ 1/4 X 7/16-20	1/4	7/16-20	0.20	5.1	1.32	33.5	0.36	9.1	3/4	-904
120HNOB _ 3/8 X 9/16-18	3/8	9/16-18	0.28	7.1	1.39	35.3	0.39	9.9	15/16	-906
120HNOB _ 1/2 X 3/4-16	1/2	3/4-16	0.42	10.7	1.76	44.7	0.44	11.2	1 1/16	-908
120HNOB _ 3/4 X 1 1/16-12	3/4	1 1/16-12	0.66	16.7	1.99	50.5	0.59	15.0	1 3/8	-912
120HNOB _ 1 X 1 5/16-12	1	1 5/16-12	0.88	22.3	2.12	53.8	0.59	15.0	1 5/8	-916

120 HRN
ADAPTER BSPT TO NPT

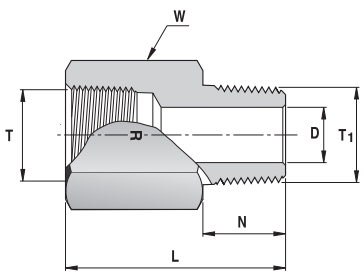

Ordering Information	T Female BSPT ISO 7/1, BS21	T1 Male NPT size	L		N		D Min. Opening		W Hex. Flat
			inch	mm	inch	mm	inch	mm	inch
120HRN _ 1/4	1/4-19	1/4	1.43	36.3	0.56	14.2	0.28	7.1	3/4
120HRN _ 3/8	3/8-19	3/8	1.51	38.4	0.56	14.2	0.38	9.6	7/8
120HRN _ 1/2	1/2-14	1/2	1.96	49.8	0.75	19.1	0.47	11.9	1 1/16

* Per SAE J1926 and MS 16142. See page 78 for mounting dimensions.
** O-rings used are Viton 90 Durometer. Other O-ring materials are available on request.
Dimensions are for reference only, and are subject to change without notice.

120 HGN

GAUGE ADAPTER BSPP TO NPT

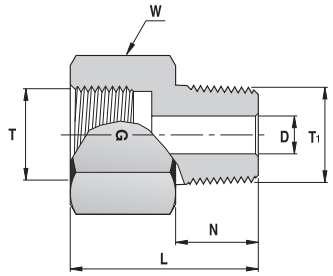

Ordering Information	T Female BSPP ISO 228/1, BS 2779 Size	T1 Male NPT Size	L		N		D Min. Opening		W Hex. Flat
			inch	mm	inch	mm	inch	mm	inch
120HGN _ 1/4	1/4-19	1/4	1.19	30.2	0.56	14.2	0.22	5.6	3/4
120HGN _ 3/8	3/8-19	3/8	1.27	32.3	0.56	14.2	0.26	6.6	15/16
120HGN _ 1/2	1/2-14	1/2	1.65	41.9	0.75	19.0	0.28	7.1	1 1/16

121 H

PIPE PLUG NPT

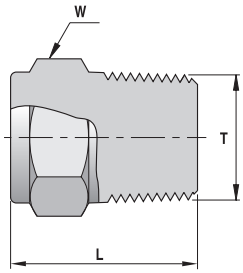

Ordering Information	T Male NPT Size	L		W Hex. Flat
		inch	mm	inch
121H _ 1/16	1/16	0.75	19.0	5/16
121H _ 1/8	1/8	0.75	19.0	7/16
121H _ 1/4	1/4	0.96	24.4	9/16
121H _ 3/8	3/8	0.99	25.2	11/16
121H _ 1/2	1/2	1.21	30.7	7/8
121H _ 3/4	3/4	1.21	30.7	1 1/16
121H _ 1	1	1.50	38.1	1 3/8

121HOB

HEX HEAD PLUG SAE/MS STRAIGHT THREAD BOSS*

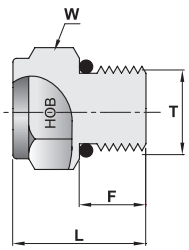

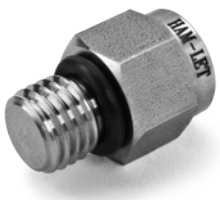

Ordering Information	T Straight Thread UN	L		F		W Hex. Flat	O-Ring**
		inch	mm	inch	mm	inch	
121HOB _ 5/16-24	5/16-24	0.70	17.8	0.30	7.6	7/16	-902
121HOB _ 7/16-20	7/16-20	0.76	19.3	0.36	9.1	9/16	-904
121HOB _ 9/16-18	9/16-18	0.82	20.8	0.39	9.9	11/16	-906
121HOB _ 3/4-16	3/4-16	0.89	22.6	0.44	11.2	7/8	-908
121HOB _ 1 1/16-12	1 1/16-12	1.12	28.4	0.59	15.0	1 1/4	-912
121HOB _ 1 5/16-12	1 5/16-12	1.18	30.0	0.59	15.0	1 1/2	-916

* Per SAE J1926 and MS 16142. See page 78 for mounting dimensions.
** O-rings used are Viton 90 Durometer. Other O-ring materials are available on request.
Dimensions are for reference only, and are subject to change without notice.

122 H
HEX NIPPLE

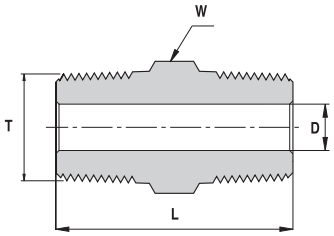

Ordering Information	T Male NPT Size	L		D Min. Opening		W Hex. Flat
		inch	mm	inch	mm	inch
122H _ 1/16	1/16	1.01	25.7	0.12	3.0	5/16
122H _ 1/8	1/8	1.01	25.7	0.19	4.8	7/16
122H _ 1/4	1/4	1.40	35.6	0.28	7.1	9/16
122H _ 3/8	3/8	1.43	36.3	0.38	9.6	11/16
122H _ 1/2	1/2	1.84	46.7	0.47	11.9	7/8
122H _ 3/4	3/4	1.84	46.7	0.62	15.8	1 1/16
122H _ 1	1	2.32	58.9	0.87	22.1	1 3/8

122 HNR
HEX NIPPLE NPT TO BSPT

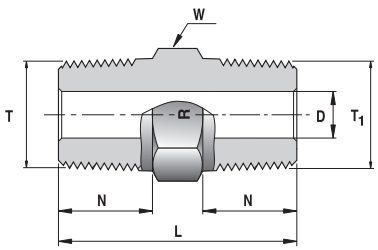

Ordering Information	T Male NPT Size	T1 Male BSPT ISO 7/1, BS21 Size	L		N		D Min. Opening		W Hex. Flat
			inch	mm	inch	mm	inch	mm	inch
122HNR _ 1/8	1/8	1/8-28	1.01	25.6	0.38	9.7	0.19	4.8	7/16
122HNR _ 1/4	1/4	1/4-19	1.40	35.6	0.56	14.2	0.28	7.1	9/16
122HNR _ 3/8	3/8	3/8-19	1.43	36.3	0.56	14.2	0.38	9.6	11/16
122HNR _ 1/2	1/2	1/2-14	1.84	46.7	0.75	19.0	0.47	11.9	7/8
122HNR _ 3/4	3/4	3/4-14	1.84	46.7	0.75	19.0	0.62	15.8	1 1/16
122HNR _ 1	1	1-11	2.32	58.9	0.94	23.9	0.87	22.1	1 3/8

Dimensions are for reference only, and are subject to change without notice.

122 HNG
HEX NIPPLE NPT TO BSPP

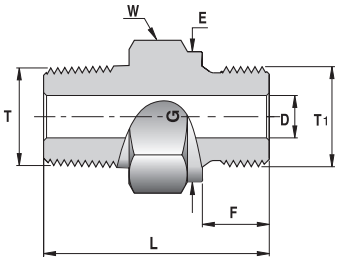

Ordering Information	T Male NPT Size	T1 Male BSPP ISO 228/1, BS 2779	L		F		E		D Min. Opening		W Hex. Flat
			inch	mm	inch	mm	inch	mm	inch	mm	inch
122HNG _ 1/8	1/8	1/8-28	1.07	27.2	0.28	7.1	0.54	13.8	0.16	4.1	9/16
122HNG _ 1/4	1/4	1/4-19	1.44	36.6	0.44	11.2	0.71	18.0	0.23	5.8	3/4
122HNG _ 3/8	3/8	3/8-19	1.47	37.3	0.44	11.2	0.85	21.8	0.31	7.9	7/8
122HNG _ 1/2	1/2	1/2-14	1.78	45.2	0.56	14.2	1.02	26.0	0.47	11.9	1 1/16
122HNG _ 3/4	3/4	3/4-14	1.95	49.5	0.62	15.7	1.26	32.0	0.62	15.8	1 5/16
122HNG _ 1	1	1-11	2.26	57.4	0.72	18.3	1.53	39.0	0.78	19.8	1 5/8

122HNOB
HEX NIPPLE NPT TO SAE/MS STRAIGHT THREAD BOSS *

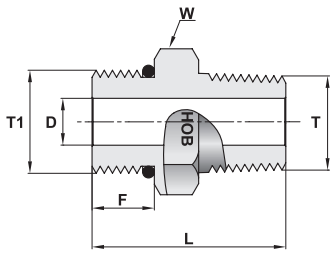

Ordering Information	T Male NPT Size	T1 Straight Thread UN	D		L		F		W Hex. Flat	O-Ring**
			inch	mm	inch	mm	inch	mm	inch	
122HNOB _ 1/4 X 7/16-20	1/4	7/16-20	0.20	5.1	1.20	30.5	0.36	9.1	9/16	-904
122HNOB _ 3/8 X 9/16-18	3/8	9/16-18	0.28	7.1	1.26	32.0	0.39	9.9	11/16	-906
122HNOB _ 1/2 X 3/4-16	1/2	3/4-16	0.42	10.7	1.53	38.9	0.44	11.2	7/8	-908
122HNOB _ 3/4 X 1 1/16-12	3/4	1 1/16-12	0.62	15.7	1.75	44.4	0.59	15.0	1 1/4	-912
122HNOB _ 1 X 1 5/16-12	1	1 5/16-12	0.88	22.4	2.00	50.8	0.59	15.0	1 1/2	-916

122HCN
CLOSE NIPPLE

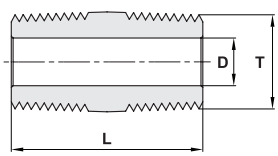

Ordering Information	T Male NPT Size	D		L		
		inch	mm	inch	mm	
122HCN _ 1/8	1/8	0.19	4.8	0.75	19.1	
122HCN _ 1/4	1/4	0.28	7.1	1.12	28.4	
122HCN _ 3/8	3/8	0.38	9.6	1.12	28.4	
122HCN _ 1/2	1/2	0.47	11.9	1.50	38.1	
122HCN _ 3/4	3/4	0.62	15.7	1.50	38.1	
122HCN _ 1	1	0.88	22.4	1.88	47.8	

* Per SAE J1926 and MS 16142. See page 78 for mounting dimensions.
** O-rings used are Viton 90 Durometer. Other O-ring materials are available on request.
Dimensions are for reference only, and are subject to change without notice.

123 H
REDUCING NIPPLE

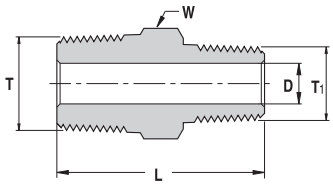

Ordering Information	T Male NPT Size	T1 Male NPT Size	L		D Min. Opening		W Hex. Flat
			inch	mm	inch	mm	inch
123H _ 1/8 X 1/16	1/8	1/16	1.01	25.7	0.12	3.0	7/16
123H _ 1/4 X 1/8	1/4	1/8	1.22	31.0	0.19	4.8	9/16
123H _ 3/8 X 1/8	3/8	1/8	1.25	31.8	0.19	4.8	11/16
123H _ 3/8 X 1/4	3/8	1/4	1.43	36.3	0.28	7.1	11/16
123H _ 1/2 X 1/8	1/2	1/8	1.47	37.3	0.19	4.8	7/8
123H _ 1/2 X 1/4	1/2	1/4	1.65	41.9	0.28	7.1	7/8
123H _ 1/2 X 3/8	1/2	3/8	1.65	41.9	0.38	9.6	7/8
123H _ 3/4 X 1/4	3/4	1/4	1.65	41.9	0.28	7.1	1 1/16
123H _ 3/4 X 1/2	3/4	1/2	1.84	46.7	0.47	11.9	1 1/16
123H _ 1 X 1/2	1	1/2	2.13	54.1	0.47	11.9	1 3/8
123H _ 1 X 3/4	1	3/4	2.13	54.1	0.62	15.8	1 3/8

3600 H
BRANCH TEE

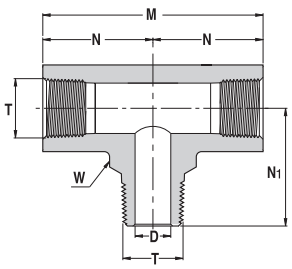

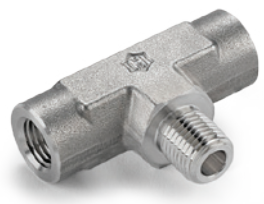

Ordering Information	T Male & Female NPT	M		N		N1		D		W Wrench Flat
		inch	mm	inch	mm	inch	mm	inch	mm	inch
3600H _ 1/8	1/8	2.08	52.8	1.04	26.4	0.87	22.1	0.19	4.8	5/8
3600H _ 1/4	1/4	2.34	59.4	1.17	29.7	1.17	29.7	0.28	7.1	13/16
3600H _ 3/8	3/8	2.84	72.1	1.42	36.1	1.26	32.0	0.38	9.6	15/16
3600H _ 1/2	1/2	3.12	79.2	1.56	39.6	1.56	39.6	0.47	11.9	1 1/8

Dimensions are for reference only, and are subject to change without notice.

3750 H
STREET TEE

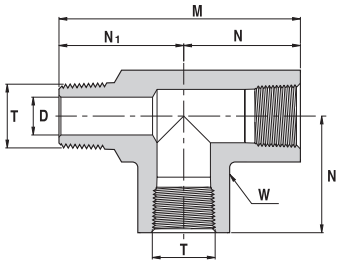

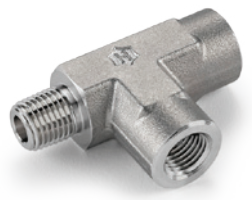

Ordering Information	T Male & Female NPT	M		N		N1		D Min. Opening		W Wrench Flat
		inch	mm	inch	mm	inch	mm	inch	mm	inch
3750H _ 1/8	1/8	1.91	48.5	1.04	26.4	0.87	22.1	0.19	4.8	5/8
3750H _ 1/4	1/4	2.34	59.4	1.17	29.7	1.17	29.7	0.28	7.1	13/16
3750H _ 3/8	3/8	2.68	68.1	1.42	36.1	1.26	32.0	0.38	9.6	15/16
3750H _ 1/2	1/2	3.12	79.2	1.56	39.6	1.56	39.6	0.47	11.9	1 1/8

130 HM
MALE TO HOSE CONNECTOR

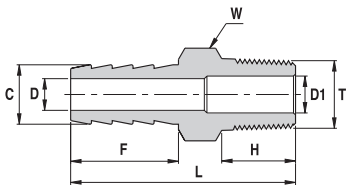

Ordering Information	Hose I.D.	T Male NPT Size	C		D		D1		F		H		L		W Hex. Flat
			inch	mm	inch	mm	inch	mm	inch	mm	inch	mm	inch	mm	inch
130HM _ 1/8 X 1/8	1/8	1/8	0.15	3.80	0.08	2.0	0.19	4.80	0.40	10.2	0.38	9.70	1.08	27.4	7/16
130HM _ 1/8 X 1/4	1/8	1/4	0.15	3.80	0.08	2.0	0.28	7.10	0.40	10.2	0.56	14.2	1.26	32.0	9/16
130HM _ 3/16 X 1/8	3/16	1/8	0.23	5.84	0.12	3.0	0.12	3.00	0.59	15.0	0.38	9.70	1.27	32.3	7/16
130HM _ 3/16 X 1/4	3/16	1/4	0.23	5.84	0.12	3.0	0.28	7.10	0.59	15.0	0.56	14.2	1.45	36.8	9/16
130HM _ 1/4 X 1/8	1/4	1/8	0.30	7.62	0.19	4.8	0.19	4.80	0.79	20.1	0.38	9.70	1.47	37.3	7/16
130HM _ 1/4 X 1/4	1/4	1/4	0.30	7.62	0.19	4.8	0.19	4.80	0.79	20.1	0.56	14.2	1.65	41.9	9/16
130HM _ 1/4 X 3/8	1/4	3/8	0.30	7.62	0.19	4.8	0.19	4.80	0.79	20.1	0.56	14.2	1.66	42.2	11/16
130HM _ 1/4 X 1/2	1/4	1/2	0.30	7.62	0.19	4.8	0.47	11.9	0.79	20.1	0.75	19.0	1.85	47.0	7/8
130HM _ 5/16 X 1/8	5/16	1/8	0.38	9.65	0.19	4.8	0.19	4.80	0.87	22.1	0.38	9.70	1.55	39.4	7/16
130HM _ 5/16 X 1/4	5/16	1/4	0.38	9.65	0.19	4.8	0.19	4.80	0.87	22.1	0.56	14.2	1.73	43.9	9/16
130HM _ 5/16 X 3/8	5/16	3/8	0.38	9.65	0.19	4.8	0.37	9.50	0.87	22.1	0.56	14.2	1.74	44.2	11/16
130HM _ 5/16 X 1/2	5/16	1/2	0.38	9.65	0.19	4.8	0.47	11.9	0.87	22.1	0.75	19.0	1.96	49.8	7/8
130HM _ 3/8 X 1/4	3/8	1/4	0.45	11.43	0.30	7.6	0.30	7.60	0.87	22.1	0.56	14.2	1.73	43.9	9/16
130HM _ 3/8 X 3/8	3/8	3/8	0.45	11.43	0.30	7.6	0.30	7.60	0.87	22.1	0.56	14.2	1.74	44.2	11/16
130HM _ 3/8 X 1/2	3/8	1/2	0.45	11.43	0.30	7.6	0.30	7.60	0.87	22.1	0.75	19.0	1.96	49.8	7/8
130HM _ 1/2 X 1/4	1/2	1/4	0.60	15.24	0.37	9.5	0.28	7.10	0.94	23.8	0.56	14.2	1.80	45.7	11/16
130HM _ 1/2 X 3/8	1/2	3/8	0.60	15.24	0.37	9.5	0.37	9.50	0.94	23.8	0.56	14.2	1.81	46.0	11/16
130HM _ 1/2 X 1/2	1/2	1/2	0.60	15.24	0.37	9.5	0.37	9.50	0.94	23.8	0.75	19.0	2.03	51.6	7/8
130HM _ 5/8 X 1/2	5/8	1/2	0.75	19.10	0.47	11.9	0.47	11.9	0.98	24.9	0.75	19.0	2.07	52.6	1 1/16
130HM _ 5/8 X 3/4	5/8	3/4	0.75	19.10	0.50	12.7	0.63	16.0	0.98	24.9	0.75	19.0	2.07	52.6	1 1/16
130HM _ 3/4 X 1/2	3/4	1/2	0.90	22.86	0.63	16.0	0.47	11.9	1.05	26.7	0.75	19.0	2.14	54.4	1 1/16
130HM _ 3/4 X 3/4	3/4	3/4	0.90	22.86	0.63	16.0	0.63	16.0	1.05	26.7	0.75	19.0	2.14	54.4	1 1/16
130HM _ 3/4 X 1	3/4	1	0.90	22.86	0.63	16.0	0.88	22.4	1.05	26.7	0.94	23.9	2.43	61.7	1 3/8
130HM _ 1 X 3/4	1	3/4	1.2	30.48	0.88	22.4	0.63	16.0	1.19	30.2	0.75	19.0	2.38	60.5	1 3/8
130HM _ 1 X 1	1	1	1.2	30.48	0.88	22.4	0.88	22.4	1.19	30.2	0.94	23.9	2.57	65.3	1 3/8

Dimensions are for reference only, and are subject to change without notice.

130 HF
FEMALE HOSE CONNECTOR

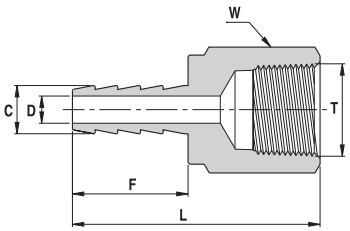

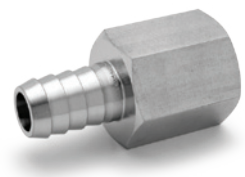

Ordering Information	Hose I.D.	T NPT Size	C		D		F		L		W Hex. Flat
			inch	mm	inch	mm	inch	mm	inch	mm	inch
130HF _ 1/8 X 1/8	1/8	1/8	0.15	3.80	0.08	2.00	0.40	10.2	1.11	28.2	9/16
130HF _ 1/8 X 1/4	1/8	1/4	0.15	3.80	0.08	2.00	0.40	10.2	1.26	32.0	3/4
130HF _ 3/16 X 1/8	3/16	1/8	0.23	5.84	0.12	3.00	0.59	15.0	1.29	32.8	9/16
130HF _ 3/16 X 1/4	3/16	1/4	0.23	5.84	0.12	3.00	0.59	15.0	1.44	36.6	3/4
130HF _ 1/4 X 1/8	1/4	1/8	0.30	7.62	0.19	4.80	0.79	20.1	1.47	37.3	9/16
130HF _ 1/4 X 1/4	1/4	1/4	0.30	7.62	0.19	4.80	0.79	20.1	1.64	41.7	3/4
130HF _ 1/4 X 3/8	1/4	3/8	0.30	7.62	0.19	4.80	0.79	20.1	1.71	43.4	7/8
130HF _ 5/16 X 1/4	5/16	1/4	0.38	9.65	0.19	4.80	0.87	22.1	1.73	43.9	3/4
130HF _ 5/16 X 3/8	5/16	3/8	0.38	9.65	0.19	4.80	0.87	22.1	1.82	46.2	7/8
130HF _ 3/8 X 1/4	3/8	1/4	0.45	11.43	0.30	7.60	0.87	22.1	1.69	42.9	3/4
130HF _ 3/8 X 3/8	3/8	3/8	0.45	11.43	0.30	7.60	0.87	22.1	1.78	45.2	7/8
130HF _ 3/8 X 1/2	3/8	1/2	0.45	11.43	0.30	7.60	0.87	22.1	2.03	51.6	1 1/16
130HF _ 1/2 X 1/2	1/2	1/2	0.60	15.24	0.38	9.70	0.94	23.9	2.13	54.1	1 1/16

130 LT
TUBE TO HOSE CONNECTOR

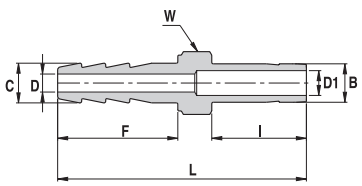

Ordering Information	Hose I.D.	B Tube Size	C		D		D1		F		I		L		W Hex. Flat
			inch	mm	inch	mm	inch	mm	inch	mm	inch	mm	inch	mm	inch
130LT _ 1/8 X 1/8	1/8	1/8	0.15	3.80	0.08	2.00	0.08	2.00	0.40	10.2	0.53	13.5	1.35	34.3	5/16
130LT _ 1/8 X 1/4	1/8	1/4	0.15	3.80	0.08	2.00	0.17	4.20	0.40	10.2	0.62	15.7	1.44	36.6	3/8
130LT _ 1/4 X 1/4	1/4	1/4	0.30	7.62	0.19	4.80	0.17	4.20	0.79	20.1	0.62	15.7	1.83	46.5	7/16
130LT _ 1/4 X 3/8	1/4	3/8	0.30	7.62	0.19	4.80	0.27	6.85	0.79	20.1	0.69	17.5	1.90	48.3	7/16
130LT _ 1/4 X 6 MM	1/4	6mm	0.30	7.62	0.19	4.80	0.16	4.00	0.79	20.1	0.62	15.7	1.86	47.2	7/16
130LT _ 5/16 X 1/4	5/16	1/4	0.37	9.40	0.19	4.80	0.17	4.20	0.87	22.1	0.62	15.7	1.91	48.5	7/16
130LT _ 3/8 X 3/8	3/8	3/8	0.45	11.43	0.30	7.60	0.27	6.85	0.87	22.1	0.69	17.5	1.98	50.3	9/16
130LT _ 3/8 X 1/2	3/8	1/2	0.45	11.43	0.30	7.60	0.37	9.40	0.87	22.1	0.91	23.1	2.20	55.9	5/8
130LT _ 1/2 X 3/8	1/2	3/8	0.60	15.24	0.38	9.70	0.27	6.85	0.94	23.9	0.69	17.5	2.05	52.1	11/16
130LT _ 1/2 X 1/2	1/2	1/2	0.60	15.24	0.38	9.70	0.37	9.40	0.94	23.9	0.91	23.1	2.27	57.7	11/16
130LT _ 3/4 X 3/4	3/4	3/4	0.90	22.86	0.63	16.0	0.59	15.0	1.05	26.7	0.97	24.6	2.44	62.0	1 1/16

Dimensions are for reference only, and are subject to change without notice.

HAM–LET END CONNECTORS
PUSHLOK HOSE

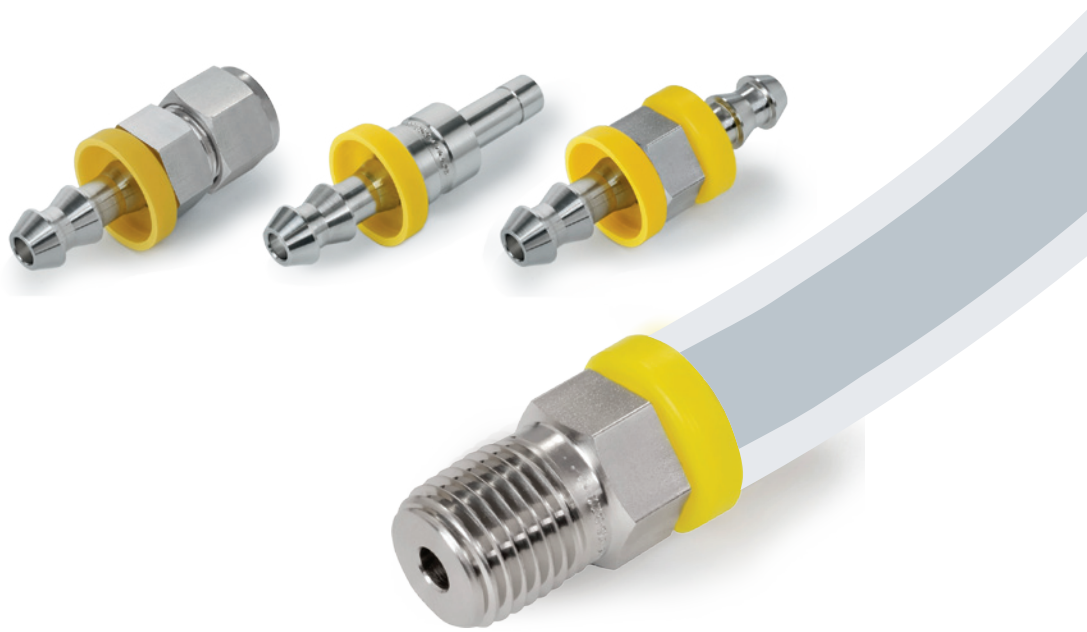

HAM-LET®
ADVANCED CONTROL TECHNOLOGY

130 HMPO
MALE PIPE THREADS

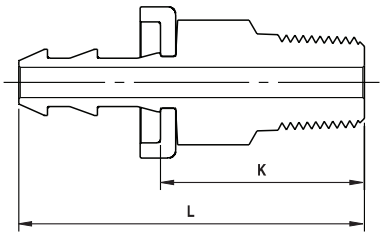

Ordering Information	Hose I.D.	T Male NPT Size	K		L	
			inch	mm	inch	mm
130HMPO _ 1/4 X 1/4	1/4	1/4	0.92	23.40	1.68	42.70
130HMPO _ 3/8 X 1/4	3/8	1/4	0.93	23.60	1.80	45.70
130HMPO _ 3/8 X 3/8	3/8	3/8	0.93	23.60	1.80	45.70
130HMPO _ 1/2 X 1/2	1/2	1/2	1.14	29.00	2.19	55.60
130HMPO _ 3/4 X 3/4	3/4	3/4	1.15	29.20	2.81	71.40

131 PO
TUBE ADAPTERS

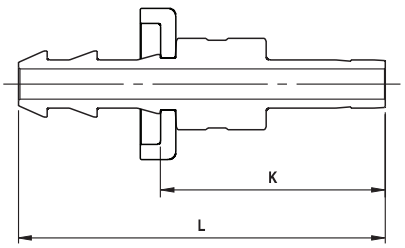

INCH

Ordering Information	Hose I.D.	B Tube Size	L		K	
			inch	mm	inch	mm
131PO _ 1/4 X 1/4	1/4	1/4	1.91	48.50	1.17	29.70
131PO _ 3/8 X 3/8	3/8	3/8	2.02	51.30	1.16	29.50
131PO _ 1/2 X 1/2	1/2	1/2	2.47	62.70	1.42	36.10
131PO _ 3/4 X 3/4	3/4	3/4	3.14	79.80	1.48	37.60

METRIC

Ordering Information	Hose I.D.	B Tube Size	L	K
			mm	mm
131PO _ 1/4 X 6mm	1/4	6mm	48.50	29.70
131PO _ 3/8 X 10mm	3/8	10mm	51.60	29.50

130 LHPO
LET-LOK® TUBE FITTINGS

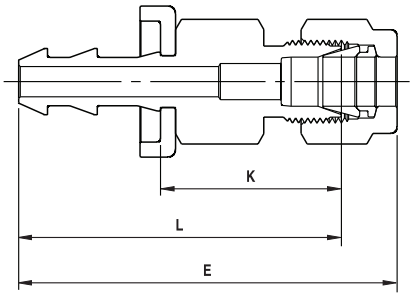

Ordering Information	A Tube O.D.	Hose I.D.	E		K		L	
			inch	mm	inch	mm	inch	mm
130LHPO _ 1/4 X 1/4	1/4	1/4	1.97	50.00	1.21	30.70	1.68	42.65
130LHPO _ 3/8 X 3/8	3/8	3/8	2.11	53.60	1.24	31.50	1.82	46.25
130LHPO _ 1/2 X 1/2	1/2	1/2	2.47	62.70	1.42	36.10	2.07	52.55

132 PO
UNIONS

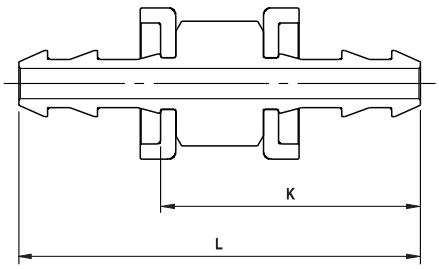

Ordering Information	Hose I.D.	Hose I.D.	L		K	
			inch	mm	inch	mm
132PO _ 1/4 X 1/4	1/4	1/4	2.07	52.60	0.55	14.00
132PO _ 3/8 X 3/8	3/8	3/8	2.25	57.20	0.51	13.00
132PO _ 1/2 X 1/2	1/2	1/2	2.61	66.30	0.51	13.00
132PO _ 3/4 X 3/4	3/4	3/4	3.83	97.30	0.51	13.00

ASSEMBLY INSTRUCTIONS

1. Cut a square edge with a hose cutter.

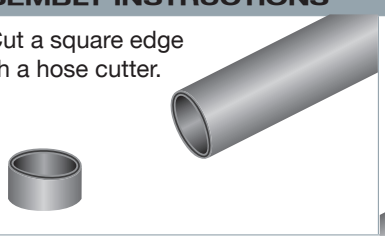

2. Push “Push Lok Hose” into end connection.

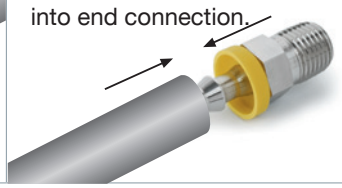

3. Continue pushing until “Push Lok Hose” reaches plastic cap.

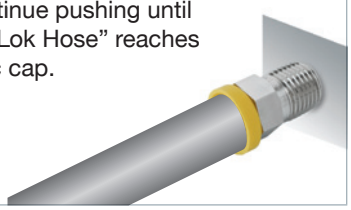

DISASSEMBLY INSTRUCTIONS

1. Slit “Push Lok Hose” as **described.**

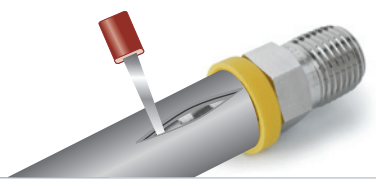

2. Bend and pull “Push Lok Hose” out from hose end.

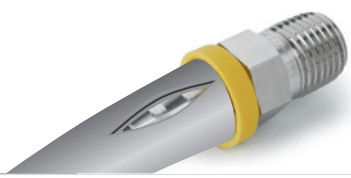

3–PIECE TUBE ASSEMBLY
SAE37°FLARE

STAINLESS STEEL
HIGH PRESSURE 37°
TUBE FITTINGS
1/8” TO 2”

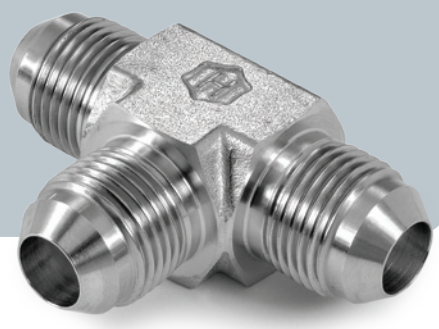

HAM-LET®
ADVANCED CONTROL TECHNOLOGY

MEETS SAE STANDARD J514

If required, see SAE Standard J514 for a complete list of dimensions.
NPT Tapered Pipe Threads meet the requirements of ASME/ANSI B.I.20.1.

All 37° Flared tube fittings 3-piece tube assembly can be used with metric tube by using a metric 37° sleeve, instead of an inch sleeve. Each dimension table shows which metric sleeve should be used for every size.

ASSEMBLY INSTRUCTIONS

1. Cut the tube to the proper length.
2. Slide the nut and sleeve onto the tube. (see Fig.1).
3. With a special flaring tool, form the flare to 37° dimension according to SAE STD. J533. (see Fig.2 page 91).
4. Screw the nut onto the body until finger tight.
5. From this position, tighten the nut with a wrench 1/4" turn in order to make a leakproof metal–to–metal connection.

Figure 1

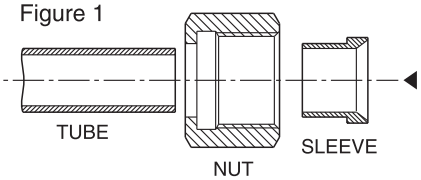

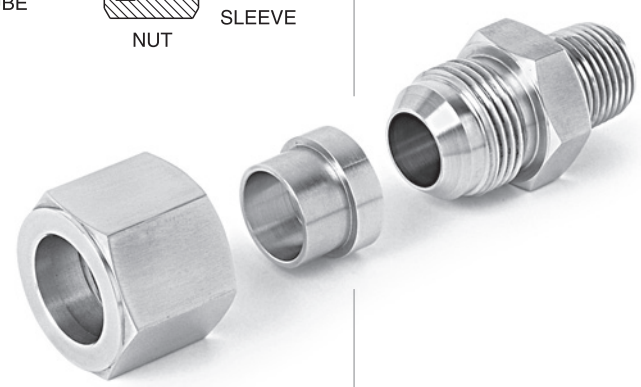

TUBING DATA FOR 37° FLARE THREE–PIECE TUBE ASSEMBLY

In order to ensure maximum fitting reliability and performance, please take great care when selecting the tube for each application.
Tubing should be fully annealed, seamless and drawn, suitable for bending and flaring, according to standard ASTM–269, A.I.S.I. 316 or 304.

QUALITY

Lengths of finished tubing should be reasonably straight and have smooth ends, free from burrs. Tubing should be free from scale and injurious defects, and it should have a workmanlike finish. Surface imperfections such as handling marks, die marks, or shallow pits will not be considered injurious defects provided the imperfections are within the tolerances specified for diameter and wall thickness. The removal of such imperfections is not required. (Quality SAE J524).

TUBE HANDLING

Scratches on the tube might cause leaks. It is, therefore, important to handle the tube carefully to reduce the risk of leaks.

1. Tubes must not be dragged on the floor.
2. Tubes must not be dragged out of a tubing rack, especially in cases of large OD tubes.

TUBE CUTTING

Two different methods can be used to cut tubes:
1. Tube cutter
2. Hacksaw

Tube cutter

To attain a leakfree connection, the tubing must be cut squarely.
A good quality tube cutter with an appropriate blade for tubing material is recommended.
Do not try to reduce the time of cutting by taking deep cuts with each turn of the cutter.
The end of the tube must be deburred to avoid damage to the fitting and to ensure that the tube reaches the bottom of the fitting.

Hacksaw cutting

In order to cut the tube with a hacksaw and to attain square ends, the tube must be cut with guide blocks. This method of cutting requires deburring of the tube ends.

WARNING

Do not hold the tube in a vise in the place where it will be inserted into the fitting. The vise will leave a mark on the tube that may cause leaks and might cause ovality.

ASSEMBLY INSTRUCTIONS

Perform flaring according to SAE J533. See Fig. 2.
See Table 1 below for dimensions.

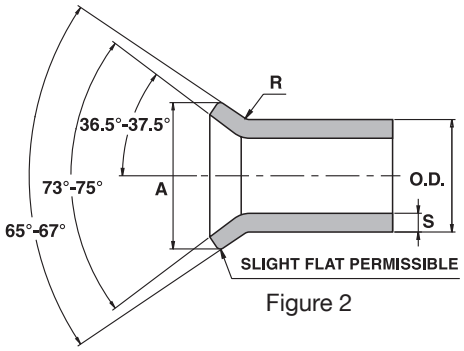

Figure 2

TABLE 1: FLARING

Nominal Tube O.D	A Single flare diameter				R		S	
	inch		mm		inch	mm	inch	mm
	Max	Min	Max	Min	±0.02	±0.5	Max	Min
1/8	0.20	0.18	5.08	4.58	0.03	0.8	0.035	0.88
3/16	0.28	0.26	7.11	6.61	0.03	0.8	0.035	0.88
1/4	0.36	0.34	9.14	8.64	0.03	0.8	0.065	1.65
5/16	0.43	0.40	10.92	10.16	0.03	0.8	0.065	1.65
3/8	0.49	0.46	12.44	11.69	0.04	1.0	0.065	1.65
1/2	0.66	0.63	16.76	16.01	0.06	1.5	0.083	2.1
5/8	0.79	0.76	20.06	19.31	0.06	1.5	0.095	2.41
3/4	0.95	0.92	24.13	23.37	0.08	2.0	0.109	2.76
7/8	1.07	1.04	27.17	26.42	0.08	2.0	0.109	2.76
1	1.20	1.17	30.48	29.72	0.09	2.3	0.12	3.04
1 1/8	1.38	1.35	35.05	34.29	0.09	2.3	0.12	3.04
1 1/4	1.51	1.48	38.35	37.60	0.09	2.3	0.12	3.04
1 1/2	1.73	1.70	43.94	43.18	0.11	2.8	0.12	3.04

Dimensions are for reference only, and subject to change without notice.

DEBURRING PRIOR TO FLARING

To ensure satisfactory flare production, tube end deburring might be required prior to flaring. It is usually necessary to break the inside corner smoothly before single flaring. In addition, some non-ferrous tubing is normally required to eliminate the cutoff burr, which might otherwise create leakage paths across a substantial portion of the flare. Smoothly breaking the outside corner prior to single flaring, or both the outside and inside corners prior to double flaring, is acceptable for any tube material to minimize splitting.

TABLE 2: ALLOWABLE WORKING PRESSURE RATINGS (CAPABLE OF 4" TO 1" MIN. BURST)

Nom. SAE Dash Size	Nom. Tube O.D Inches	37° Flare Straight Thread	Nom. Pipe Size	SAE St.Threads Union and Bulkhead	Fittings with Pipe Threads
2	1/8	5/16" - 24	1/8"	5000	5000
3	3/16	3/8" - 24	1/8"	5000	5000
4	1/4	7/16" - 20	1/8"	5000	5000
5	5/16	1/2" - 20	1/8"	5000	5000
6	3/8	9/16" - 18	1/4"	5000	5000
8	1/2	3/4" - 16	3/8"	4500	4000
10	5/8	7/8" - 14	1/2"	3500	3000
12	3/4	1 1/16" - 12	3/4"	3500	3000
14	7/8	1 3/16" - 12	3/4"	3000	2500
16	1	1 5/16" - 12	1"	3000	2000
20	1 1/4	1 5/8" - 12	1 1/4"	2500	1150
24	1 1/2	1 7/8" - 12	1 1/2"	2000	1000
32	2	2 1/2" - 12	2"	1500	1000

NOTE:

As many factors influence the pressure at which a system will or will not perform satisfactorily, values shown in Table 2 should not be construed as guaranteed minimum.

37° FLARE INDEX

SLEEVE 123
For 3-piece tube assembly
S.A.E. 070115
740HF

NUT 123
For 3-piece tube assembly
S.A.E. 070110
741HF

REDUCING ADAPTER 124
S.A.E. 070123
741HFL

UNION 125
S.A.E. 070101
742HF

LARGE HEX UNION 125
S.A.E. 070119
742HFL

UNION TEE 126
S.A.E. 070401
744HF

MALE BRANCH TEE 127
S.A.E. 070425
745HF

FEMALE CONNECTOR 128
S.A.E. 070103
746HF

MALE CONNECTOR 129
S.A.E. 070102
748HF

MALE CONNECTOR 130
S.A.E. 0701120
748HOB

MALE ELBOW 131
S.A.E. 070202
749HF

FEMALE ELBOW 132
S.A.E. 070203
750HF

MALE RUN TEE 133
S.A.E. 070424
751HF

UNION ELBOW 134
S.A.E. 070201
755HF

FEMALE RUN TEE 135
S.A.E. 070426
771HFL

FEMALE BRANCH TEE 136
S.A.E. 070427
772HFL

BULKHEAD UNION 137
S.A.E. 070601
774HFL

BULKHEAD LOCKNUT 137
S.A.E. 070118
774HFLN

CROSS 138
S.A.E. 070501
7102HFL

TUBE PLUG 139
S.A.E. 070109
7639HF

CAP 139
S.A.E. 070112
7640HF

All 37° Flared tube fittings 3-piece tube assembly can be used with metric tube by using a metric 37° sleeve, instead of an inch sleeve. Each dimension table shows which metric sleeve should be used for every size.

740 HF

SLEEVE FOR 3-PIECE TUBE ASSEMBLY

S.A.E. 070115

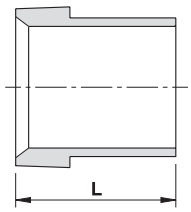

INCH SLEEVE			
Ordering Information	Tube O.D.	L	
	inch	inch	mm
740HF SS 1/8''	1/8	0.34	8.6
740HF SS 3/16''	3/16	0.34	8.6
740HF SS 1/4''	1/4	0.41	10.4
740HF SS 5/16''	5/16	0.44	11.2
740HF SS 3/8''	3/8	0.50	12.7
740HF SS 1/2''	1/2	0.56	14.2
740HF SS 5/8''	5/8	0.66	16.8
740HF SS 3/4''	3/4	0.68	17.3
740HF SS 7/8''	7/8	0.76	19.3
740HF SS 1''	1	0.78	19.8
740HF SS 1 1/4''	1 1/4	0.91	23.1
740HF SS 1 1/2''	1 1/2	1.12	28.4
740HF SS 2''	2	1.19	30.2

METRIC SLEEVE		
Ordering Information	Tube O.D.	
	inch	mm
	-	-
	-	-
740HF SS 6MM	10.4	10.4
740HF SS 8MM	11.2	11.2
740HF SS 10MM	12.7	12.7
740HF SS 12MM	14.2	14.2
740HF SS 16MM	16.8	16.8
740HF SS 18MM	17.3	17.3
740HF SS 20MM	19.3	19.3
740HF SS 25MM	19.8	19.8
740HF SS 32MM	23.1	23.1
740HF SS 38MM	28.4	28.4
Metric sleeves are used with standard nuts & bodies.		

741 HF

NUT FOR 3-PIECE TUBE ASSEMBLY

S.A.E. 070110

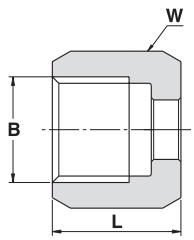

Ordering Information	Tube O.D.		B UN	W Hex. Flat	L	
	inch	mm		inch	inch	mm
741HF SS 1/8''	1/8	-	5/16 -24	3/8	0.54	13.7
741HF SS 3/16''	3/16	-	3/8 -24	7/16	0.60	15.2
741HF SS 1/4'' / 6MM	1/4	6	7/16 -20	9/16	0.61	15.5
741HF SS 5/16'' / 8MM	5/16	8	1/2 -20	5/8	0.67	17.0
741HF SS 3/8'' / 10MM	3/8	10	9/16 -18	11/16	0.72	18.3
741HF SS 1/2'' / 12MM	1/2	12	3/4 -16	7/8	0.84	21.3
741HF SS 5/8'' / 16MM	5/8	16	7/8 -14	1	0.97	24.6
741HF SS 3/4'' / 18MM	3/4	18	1 1/16 -12	1 1/4	1.02	25.9
741HF SS 7/8'' / 20MM	7/8	20	1 3/16 -12	1 3/8	1.08	27.4
741HF SS 1'' / 25MM	1	25	1 5/16 -12	1 1/2	1.12	28.4
741HF SS 1 1/4'' / 32MM	1 1/4	32	1 5/8 -12	2	1.22	31.0
741HF SS 1 1/2'' / 38MM	1 1/2	38	1 7/8 -12	2 1/4	1.41	35.8
741HF SS 2''	2	-	2 1/2 -12	2 7/8	1.74	44.2

Dimensions are for reference only, and are subject to change without notice.

741 HFL

REDUCING ADAPTER

S.A.E. 070123

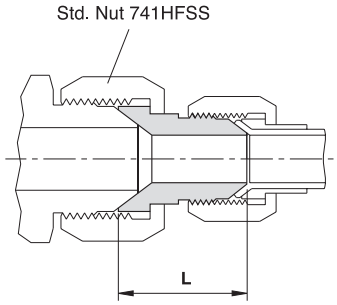

TUBE (INCH)				
Ordering Information	Tube O.D.	B UN	L	
	inch		inch	mm
741HFL SS 3/8'' X 1/4''	3/8 to 1/4	7/16 - 20	0.97	24.6
741HFL SS 1/2'' X 1/4''	1/2 to 1/4	7/16 - 20	1.00	25.4
741HFL SS 1/2'' X 3/8''	1/2 to 3/8	9/16 - 18	1.00	25.4
741HFL SS 5/8'' X 1/4''	5/8 to 1/4	7/16 - 20	1.03	26.2
741HFL SS 5/8'' X 3/8''	5/8 to 3/8	9/16 - 18	1.03	26.2
741HFL SS 3/4'' X 1/4''	3/4 to 1/4	7/16 - 20	1.09	27.7
741HFL SS 3/4'' X 3/8''	3/4 to 3/8	9/16 - 18	1.09	27.7
741HFL SS 3/4'' X 1/2''	3/4 to 1/2	3/4 - 16	1.19	30.2
741HFL SS 3/4'' X 5/8''	3/4 to 5/8	7/8 - 14	1.66	42.1
741HFL SS 7/8'' X 3/8''	7/8 to 3/8	9/16 - 18	1.13	28.7
741HFL SS 7/8'' X 5/8''	7/8 to 5/8	7/8 - 14	1.33	33.7
741HFL SS 7/8'' X 3/4''	7/8 to 3/4	1 1/16 - 12	1.84	46.7
741HFL SS 1'' X 3/4''	1 to 3/4	1 1/16 - 12	1.47	37.3
741HFL SS 1'' X 7/8''	1 to 7/8	1 3/16 - 12	1.91	48.5
741HFL SS 1 1/4'' X 3/4''	1 1/4 to 3/4	1 1/16 - 12	1.53	38.8
741HFL SS 1 1/4'' X 1''	1 1/4 to 1	1 5/16 - 12	1.59	40.3
741HFL SS 1 1/2'' X 1 1/4''	1 1/2 to 1 1/4	1 5/8 - 12	1.69	42.9

TUBE (MM)				
Ordering Information	Tube O.D.	B UN	L	
	inch to mm		inch	mm
741HFL SS 3/8'' X 6MM	3/8 to 6	7/16 - 20	0.97	24.6
741HFL SS 1/2'' X 6MM	1/2 to 6	7/16 - 20	1.00	25.4
741HFL SS 1/2'' X 10MM	1/2 to 10	9/16 - 18	1.00	25.4
741HFL SS 5/8'' X 6MM	5/8 to 6	7/16 - 20	1.03	26.2
741HFL SS 5/8'' X 10MM	5/8 to 10	9/16 - 18	1.03	26.2
741HFL SS 5/8'' X 12MM	5/8 to 12	3/4 - 16	1.44	36.5
741HFL SS 3/4'' X 6MM	3/4 to 6	7/16 - 20	1.09	27.7
741HFL SS 3/4'' X 10MM	3/4 to 10	9/16 - 18	1.09	27.7
741HFL SS 3/4'' X 12MM	3/4 to 12	3/4 - 16	1.19	30.2
741HFL SS 3/4'' X 16MM	3/4 to 16	7/8 - 14	1.66	42.1
741HFL SS 7/8'' X 10MM	7/8 to 10	9/16 - 18	1.13	28.7
741HFL SS 7/8'' X 16MM	7/8 to 16	7/8 - 14	1.33	33.7
741HFL SS 7/8'' X 18MM	7/8 to 18	1 1/16 - 12	1.84	46.7
741HFL SS 1'' X 18MM	1 to 18	1 1/16 - 12	1.47	37.3
741HFL SS 1'' X 20MM	1 to 20	1 3/16 - 12	1.91	48.5
741HFL SS 1 1/4'' X 18MM	1 1/4 to 18	1 1/16 - 12	1.53	38.8
741HFL SS 1 1/4'' X 25MM	1 1/4 to 25	1 5/16 - 12	1.59	40.3
741HFL SS 1 1/2'' X 32MM	1 1/2 to 32	1 5/8 - 12	1.69	42.9

Dimensions are for reference only, and are subject to change without notice.

742 HF
UNION
S.A.E. 070101

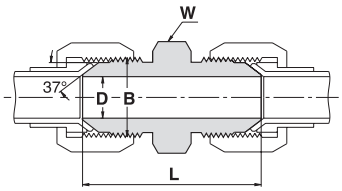

Ordering Information	Tube O.D.		B UN	D		W Hex. Flat	L	
	inch	mm		inch	mm	inch	inch	mm
742HF SS 1/8''	1/8	-	5/16 - 24	0.062	1.6	7/16	1.17	29.7
742HF SS 3/16''	3/16	-	3/8 - 24	0.125	3.2	7/16	1.23	31.2
742HF SS 1/4'' / 6MM	1/4	6	7/16 - 20	0.172	4.4	1/2	1.37	34.8
742HF SS 5/16'' / 8MM	5/16	8	1/2 - 20	0.234	6.0	9/16	1.37	34.8
742HF SS 3/8'' / 10MM	3/8	10	9/16 - 18	0.297	7.5	5/8	1.41	35.8
742HF SS 1/2'' / 12MM	1/2	12	3/4 - 16	0.391	9.9	13/16	1.62	41.1
742HF SS 5/8'' / 16MM	5/8	16	7/8 - 14	0.484	12.3	15/16	1.88	47.8
742HF SS 3/4'' / 18MM	3/4	18	1 1/16 - 12	0.609	15.5	1 1/8	2.16	54.9
742HF SS 7/8'' / 20MM	7/8	20	1 3/16 - 12	0.719	18.3	1 1/4	2.21	56.1
742HF SS 1'' / 25MM	1	25	1 5/16 - 12	0.844	21.5	1 3/8	2.25	57.2
742HF SS 1 1/4'' / 32MM	1 1/4	32	1 5/8 - 12	1.078	27.5	1 11/16	2.43	61.7
742HF SS 1 1/2'' / 38MM	1 1/2	38	1 7/8 - 12	1.312	33.0	2	2.75	69.8
742HF SS 2''	2	-	2 1/2 - 12	1.781	45.0	2 5/8	3.04	86.4

742 HFL
LARGE HEX UNION
S.A.E. 070119

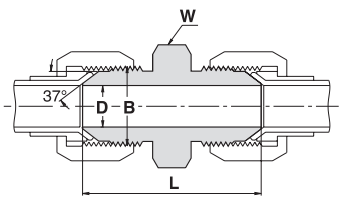

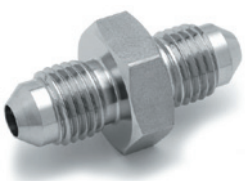

Ordering Information	Tube O.D.		B UN	D		W Hex. Flat	L	
	inch	mm		inch	mm	inch	inch	mm
742HFL SS 1/8''	1/8	-	5/16 - 24	0.062	1.6	9/16	1.17	29.7
742HFL SS 3/16''	3/16	-	3/8 - 24	0.125	3.2	5/8	1.23	31.2
742HFL SS 1/4'' / 6MM	1/4	6	7/16 - 20	0.172	4.4	11/16	1.37	34.8
742HFL SS 5/16'' / 8MM	5/16	8	1/2 - 20	0.234	6.0	3/4	1.37	34.8
742HFL SS 3/8'' / 10MM	3/8	10	9/16 - 18	0.297	7.5	13/16	1.41	35.8
742HFL SS 1/2'' / 12MM	1/2	12	3/4 - 16	0.391	9.9	1	1.62	41.1
742HFL SS 5/8'' / 16MM	5/8	16	7/8 - 14	0.484	12.3	1 1/8	1.88	47.8
742HFL SS 3/4'' / 18MM	3/4	18	1 1/16 - 12	0.609	15.5	1 3/8	2.16	54.9
742HFL SS 7/8'' / 20MM	7/8	20	1 3/16 - 12	0.719	18.3	1 1/2	2.21	56.1
742HFL SS 1'' / 25MM	1	25	1 5/16 - 12	0.844	21.5	1 5/8	2.25	57.2
742HFL SS 1 1/4'' / 32MM	1 1/4	32	1 5/8 - 12	1.078	27.5	1 7/8	2.43	61.7
742HFL SS 1 1/2'' / 38MM	1 1/2	38	1 7/8 - 12	1.312	33.0	2 1/8	2.75	69.8
742HFL SS 2''	2	-	2 1/2 - 12	1.781	45.0	2 3/4	3.04	86.4

Dimensions are for reference only, and are subject to change without notice.

744 HF
UNION TEE
S.A.E. 070401

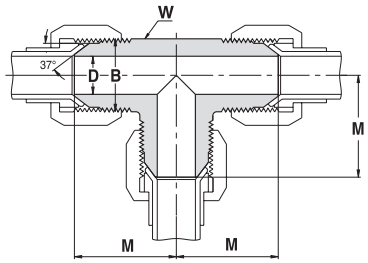

Ordering Information	Tube O.D.		B UN	D		W Wrench Flat	M	
	inch	mm		inch	mm	inch	inch	mm
744HF SS 1/8''	1/8	-	5/16 - 24	0.062	1.6	7/16	0.77	19.6
744HF SS 3/16''	3/16	-	3/8 - 24	0.125	3.2	1/2	0.83	21.1
744HF SS 1/4'' / 6MM	1/4	6	7/16 - 20	0.172	4.4	1/2	0.89	22.6
744HF SS 5/16'' / 8MM	5/16	8	1/2 - 20	0.234	6.0	5/8	0.95	24.1
744HF SS 3/8'' / 10MM	3/8	10	9/16 - 18	0.297	7.5	5/8	1.06	26.9
744HF SS 1/2'' / 12MM	1/2	12	3/4 - 16	0.391	9.9	15/16	1.25	31.8
744HF SS 5/8'' / 16MM	5/8	16	7/8 - 14	0.484	12.3	15/16	1.45	36.8
744HF SS 3/4'' / 18MM	3/4	18	1 1/16 - 12	0.609	15.5	1 3/8	1.66	42.2
744HF SS 7/8'' / 20MM	7/8	20	1 3/16 - 12	0.719	18.3	1 3/8	1.80	45.7
744HF SS 1'' / 25MM	1	25	1 5/16 - 12	0.844	21.5	1 3/8	1.81	46.0
744HF SS 1 1/4'' / 32MM	1 1/4	32	1 5/8 - 12	1.078	27.5	2	2.06	52.3
744HF SS 1 1/2'' / 38MM	1 1/2	38	1 7/8 - 12	1.312	33.0	*2	2.33	59.2
744HF SS 2''	2	-	2 1/2 - 12	1.781	45.0	*2 5/8	3.06	77.7

*Not from Forging

Dimensions are for reference only, and are subject to change without notice.

745 HF

MALE BRANCH TEE

S.A.E. 070425

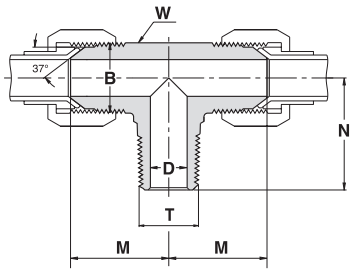

Ordering Information	Tube O.D.		B UN	T NPT	D		W Wrench Flat	M		N	
	inch	mm			inch	mm	inch	inch	mm	inch	mm
745HF SS 1/8'' X 1/8''	1/8	-	5/16 - 24	1/8 - 27	0.062	1.6	7/16	0.77	19.6	0.72	18.3
745HF SS 3/16'' X 1/8''	3/16	-	3/8 - 24	1/8 - 27	0.125	3.2	1/2	0.83	21.1	0.72	18.3
745HF SS 1/4'' / 6MM X 1/8''	1/4	6	7/16 - 20	1/8 - 27	0.172	4.4	1/2	0.89	22.6	0.78	19.8
745HF SS 1/4'' / 6MM X 1/4''	1/4	6	7/16 - 20	1/4 - 18	0.172	4.4	5/8	1.06	26.9	1.09	27.7
745HF SS 5/16'' / 8MM X 1/8''	5/16	8	1/2 - 20	1/8 - 27	0.190	4.8	5/8	0.95	24.1	0.78	19.8
745HF SS 5/16'' / 8MM X 1/4''	5/16	8	1/2 - 20	1/4 - 18	0.234	6.0	5/8	1.06	26.9	1.09	27.7
745HF SS 3/8'' / 10MM X 1/8''	3/8	10	9/16 - 18	1/8 - 27	0.190	4.8	5/8	1.06	26.9	0.90	22.8
745HF SS 3/8'' / 10MM X 1/4''	3/8	10	9/16 - 18	1/4 - 18	0.280	7.1	5/8	1.06	26.9	1.09	27.7
745HF SS 3/8'' / 10MM X 3/8''	3/8	10	9/16 - 18	3/8 - 18	0.297	7.5	13/16	1.14	29.0	1.22	31.0
745HF SS 3/8'' / 10MM X 1/2''	3/8	10	9/16 - 18	1/2 - 14	0.297	7.5	15/16	1.23	31.2	1.47	37.3
745HF SS 1/2'' / 12MM X 1/4''	1/2	12	3/4 - 16	1/4 - 18	0.280	7.1	15/16	1.25	31.8	1.22	31.0
745HF SS 1/2'' / 12MM X 3/8''	1/2	12	3/4 - 16	3/8 - 18	0.380	9.5	15/16	1.25	31.8	1.22	31.0
745HF SS 1/2'' / 12MM X 1/2''	1/2	12	3/4 - 16	1/2 - 14	0.391	9.9	15/16	1.33	33.7	1.47	37.3
745HF SS 1/2'' / 12MM X 3/4''	1/2	12	3/4 - 16	3/4 - 14	0.391	9.9	1 1/8	1.42	36.0	1.59	40.4
745HF SS 5/8'' / 16MM X 3/8''	5/8	16	7/8 - 14	3/8 - 18	0.380	9.5	15/16	1.45	36.8	1.30	33.0
745HF SS 5/8'' / 16MM X 1/2''	5/8	16	7/8 - 14	1/2 - 14	0.470	11.9	15/16	1.45	36.8	1.47	37.3
745HF SS 5/8'' / 16MM X 3/4''	5/8	16	7/8 - 14	3/4 - 14	0.484	12.3	1 1/8	1.53	38.9	1.59	40.4
745HF SS 3/4'' / 18MM X 1/2''	3/4	18	1 1/16 - 12	1/2 - 14	0.470	11.9	1 1/8	1.66	41.0	1.59	40.4
745HF SS 3/4'' / 18MM X 3/4''	3/4	18	1 1/16 - 12	3/4 - 14	0.609	15.5	1 1/8	1.66	41.0	1.59	40.4
745HF SS 7/8'' / 20MM X 3/4''	7/8	20	1 3/16 - 12	3/4 - 14	0.719	18.3	1 3/8	1.73	43.9	1.69	42.9
745HF SS 1'' / 25MM X 3/4''	1	25	1 5/16 - 12	3/4 - 14	0.719	18.3	1 3/8	1.81	46.0	1.78	45.2
745HF SS 1'' / 25 MM X 1''	1	25	1 5/16 - 12	1-11.5	0.844	21.5	1 3/8	1.81	46.0	1.97	50.0
745HF SS 1 1/4'' / 32 MM X 1''	1 1/4	32	1 5/8 - 12	1-11.5	0.844	21.5	*2	2.06	52.3	2.35	59.6
745HF SS 1 1/4'' / 32 MM X 1 1/4''	1 1/4	32	1 5/8 - 12	1 1/4 -11.5	1.078	27.5	*2	2.06	52.3	2.38	60.5
745HF SS 1 1/2'' / 38 MM X 1 1/2''	1 1/2	38	1 7/8 - 12	1 1/2 -11.5	1.312	33.0	*2	2.33	59.2	2.64	67.1
745HF SS 2'' X 2''	2	-	1 7/8 - 12	2-11.5	1.781	45.0	*2 5/8	3.06	77.7	3.00	76.2

*Not from Forging

Dimensions are for reference only, and are subject to change without notice.

746 HF

FEMALE CONNECTOR

S.A.E. 070103

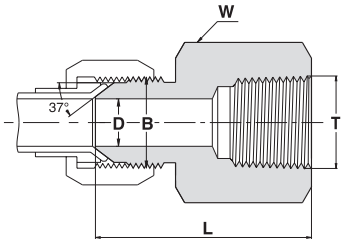

Ordering Information	Tube O.D.		B UN	T NPT	D		W Hex. Flat	L	
	inch	mm			inch	mm	inch	inch	mm
746HF SS 1/8'' X 1/8''	1/8	-	5/16 - 24	1/8 - 27	0.062	1.6	9/16	1.12	28.4
746HF SS 3/16'' X 1/8''	3/16	-	3/8 - 24	1/8 - 27	0.125	3.2	9/16	1.13	28.7
746HF SS 1/4'' / 6MM X 1/8''	1/4	6	7/16 - 20	1/8 - 27	0.172	4.4	9/16	1.19	30.2
746HF SS 1/4'' / 6MM X 1/4''	1/4	6	7/16 - 20	1/4 - 18	0.172	4.4	3/4	1.39	35.3
746HF SS 5/16'' / 8MM X 1/8	5/16	8	1/2 - 20	1/8 - 27	0.234	6.0	9/16	1.17	29.7
746HF SS 5/16'' / 8MM X 1/4''	5/16	8	1/2 - 20	1/4 - 18	0.234	6.0	3/4	1.39	35.3
746HF SS 3/8'' / 10MM X 1/4''	3/8	10	9/16 - 18	1/4 - 18	0.297	7.5	3/4	1.40	35.6
746HF SS 3/8'' / 10MM X 3/8''	3/8	10	9/16 - 18	3/8 - 18	0.297	7.5	7/8	1.46	37.1
746HF SS 1/2'' / 12MM X 3/8''	1/2	12	3/4 - 16	3/8 - 18	0.391	9.9	7/8	1.56	39.6
746HF SS 1/2'' / 12MM X 1/2''	1/2	12	3/4 - 16	1/2 - 14	0.391	9.9	1 1/8	1.79	45.6
746HF SS 5/8'' / 16MM X 1/2''	5/8	16	7/8 - 14	1/2 - 14	0.484	12.3	1 1/8	1.89	48.0
746HF SS 3/4'' / 18MM X 1/2''	3/4	18	1 1/16 - 12	1/2 - 14	0.609	15.5	1 1/8	2.05	52.1
746HF SS 3/4'' / 18MM X 3/4''	3/4	18	1 1/16 - 12	3/4 - 14	0.609	15.5	1 3/8	2.06	52.3
746HF SS 7/8'' / 20MM X 3/4''	7/8	20	1 3/16 - 12	3/4 - 14	0.719	18.3	1 3/8	2.06	52.3
746HF SS 1'' / 25MM X 1''	1	25	1 5/16 - 12	1 - 11.5	0.844	21.5	1 5/8	2.35	59.7
746HF SS 1 1/4'' / 32MM X 1 1/4''	1 1/4	32	1 5/8 - 12	1 1/4 -11.5	1.078	27.5	2	2.49	63.2
746HF SS 1 1/2'' / 38MM X 1 1/2''	1 1/2	38	1 7/8 - 12	1 1/2 -11.5	1.312	33.0	2 3/8	2.62	66.5
746HF SS 2'' X 2''	2	-	2 1/2 - 12	2 -11.5	1.781	45.0	2 7/8	2.97	75.4

Dimensions are for reference only, and are subject to change without notice.

748 HF

MALE CONNECTOR

S.A.E. 070102

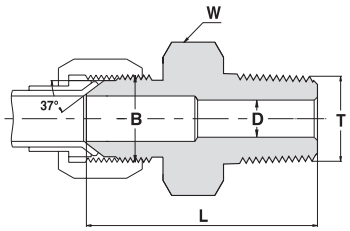

Ordering Information	Tube O.D.		B UN	T NPT	D		W Hex. Flat	L	
	inch	mm			inch	mm	inch	inch	mm
748HF SS 1/8'' X 1/8''	1/8	-	5/16 - 24	1/8 - 27	0.062	1.6	7/16	1.11	28.2
748HF SS 3/16'' X 1/8''	3/16	-	3/8 - 24	1/8 - 27	0.125	3.2	7/16	1.14	29.0
748HF SS 1/4'' / 6MM X 1/8''	1/4	6	7/16 - 20	1/8 - 27	0.172	4.4	1/2	1.22	31.0
748HF SS 1/4'' / 6MM X 1/4''	1/4	6	7/16 - 20	1/4 - 18	0.172	4.4	9/16	1.42	36.0
748HF SS 1/4'' / 6MM X 1/2''	1/4	6	7/16 - 20	1/2 - 14	0.172	4.4	7/8	1.68	42.7
748HF SS 5/16'' / 8MM X 1/8''	5/16	8	1/2 - 20	1/8 - 27	0.190	4.8	9/16	1.22	31.0
748HF SS 5/16'' / 8MM X 1/4''	5/16	8	1/2 - 20	1/4 - 18	0.234	6.0	9/16	1.42	36.1
748HF SS 3/8'' / 10MM X 1/8''	3/8	10	9/16 - 18	1/8 - 27	0.190	4.8	5/8	1.25	31.8
748HF SS 3/8'' / 10MM X 1/4''	3/8	10	9/16 - 18	1/4 - 18	0.280	7.1	5/8	1.43	36.3
748HF SS 3/8'' / 10MM X 3/8''	3/8	10	9/16 - 18	3/8 - 18	0.297	7.5	3/4	1.43	36.3
748HF SS 3/8'' / 10MM X 1/2''	3/8	10	9/16 - 18	1/2 - 14	0.297	7.5	7/8	1.69	42.5
748HF SS 1/2'' / 12MM X 1/4''	1/2	12	3/4 - 16	1/4 - 18	0.280	7.1	13/16	1.53	38.9
748HF SS 1/2'' / 12MM X 3/8''	1/2	12	3/4 - 16	3/8 - 18	0.380	9.5	13/16	1.53	38.9
748HF SS 1/2'' / 12MM X 1/2''	1/2	12	3/4 - 16	1/2 - 14	0.391	9.9	7/8	1.79	45.4
748HF SS 1/2'' / 12MM X 3/4''	1/2	12	3/4 - 16	3/4 - 14	0.391	9.9	1 1/8	1.85	47.0
748HF SS 5/8'' / 16MM X 3/8''	5/8	16	7/8 - 14	3/8 - 18	0.380	9.5	15/16	1.70	43.1
748HF SS 5/8'' / 16MM X 1/2''	5/8	16	7/8 - 14	1/2 - 14	0.484	11.9	15/16	1.89	48.0
748HF SS 5/8'' / 16MM X 3/4''	5/8	16	7/8 - 14	3/4 - 14	0.470	12.3	1 1/8	1.95	49.5
748HF SS 3/4'' / 18MM X 3/4''	3/4	18	1 1/16 - 12	3/4 - 14	0.609	15.5	1 1/8	2.06	52.3
748HF SS 3/4'' / 18MM X 1''	3/4	18	1 1/16 - 12	1 - 11.5	0.609	15.5	1 3/8	2.25	57.1
748HF SS 7/8'' / 20MM X 3/4''	7/8	20	1 3/16 - 12	3/4 - 14	0.719	18.3	1 1/4	2.09	53.1
748HF SS 1'' / 25MM X 3/4''	1	25	1 5/16 - 12	3/4 - 14	0.719	18.3	1 3/8	2.11	53.5
748HF SS 1'' / 25MM X 1''	1	25	1 5/16 - 12	1 - 11.5	0.844	21.5	1 3/8	2.30	58.4
748HF SS 1 1/4'' / 32MM X 1''	1 1/4	32	1 5/8 - 12	1 - 11.5	0.844	21.5	1 3/4	2.42	61.5
748HF SS 1 1/4'' / 32MM X 1 1/4''	1 1/4	32	1 5/8 - 12	1 1/4 -11.5	1.078	27.5	1 3/4	2.45	62.2
748HF SS 1 1/2'' / 38MM X 1 1/4''	1 1/2	38	1 7/8 - 12	1 1/4 -11.5	1.312	33.0	2	2.68	68.1
748HF SS 1 1/2'' / 38MM X 1 1/2''	1 1/2	38	1 7/8 - 12	1 1/2 -11.5	1.312	33.0	2	2.68	68.1
748HF SS 2'' X 2''	2	-	2 1/2 - 12	2 -11.5	1.781	45.0	2 5/8	3.11	79.0

Dimensions are for reference only, and are subject to change without notice.

748 HOB

MALE CONNECTOR

SAE straight thread boss connects flared tube ends to straight thread boss S.A.E. 070120

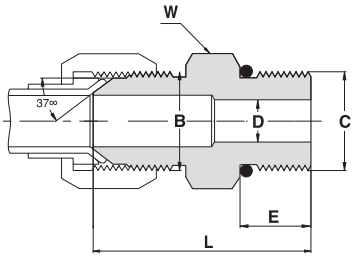

Ordering Information	Tube O.D.		B UN	C UN	D		W Hex. Flat	E		L		O-Ring STD. Dash No.
	inch	mm			inch	mm	inch	inch	mm	inch	mm	
748HOB SS 1/8'' X 5/16''-24	1/8	-	5/16 - 24	5/16 - 24	0.062	1.6	7/16	0.30	7.5	1.06	26.9	-902
748HOB SS 3/16'' X 3/8''-24	3/16	-	3/8 - 24	3/8 - 24	0.125	3.2	1/2	0.30	7.5	1.10	27.9	-903
748HOB SS 1/4'' / 6MM X 7/16''-20	1/4	6	7/16 - 20	7/16 - 20	0.172	4.4	9/16	0.36	9.1	1.23	31.2	-904
748HOB SS 1/4'' / 6MM X 1/2''-20	1/4	6	7/16 - 20	1/2 - 20	0.172	4.4	5/8	0.36	9.1	1.23	31.2	-905
748HOB SS 1/4'' / 6MM X 9/16''-18	1/4	6	7/16 - 20	9/16 - 18	0.172	4.4	11/16	0.39	9.9	1.30	33.0	-906
748HOB SS 1/4'' / 6MM X 3/4''-16	1/4	6	7/16 - 20	3/4 - 16	0.172	4.4	7/8	0.44	11.1	1.37	34.8	-908
748HOB SS 5/16'' / 8MM X 1/2''-20	5/16	8	1/2 - 20	1/2 - 20	0.234	6.0	5/8	0.36	9.1	1.23	31.2	-905
748HOB SS 3/8'' / 10MM X 9/16''-18	3/8	10	9/16 - 18	9/16 - 18	0.280	7.1	11/16	0.39	9.9	1.30	33.0	-906
748HOB SS 3/8'' / 10MM X 3/4''-16	3/8	10	9/16 - 18	3/4 - 16	0.297	7.5	7/8	0.44	11.1	1.38	35.1	-908
748HOB SS 3/8'' / 10MM X 7/8''-14	3/8	10	9/16 - 18	7/8 - 14	0.297	7.5	1	0.50	12.7	1.50	38.1	-910
748HOB SS 1/2'' / 12MM X 3/4''-16	1/2	12	3/4 - 16	3/4 - 16	0.391	9.9	7/8	0.44	11.1	1.48	37.6	-908
748HOB SS 1/2'' / 12MM X 9/16''-18	1/2	12	3/4 - 16	9/16 - 18	0.280	7.1	13/16	0.39	9.9	1.44	36.6	-906
748HOB SS 1/2'' / 12MM X 7/8''-14	1/2	12	3/4 - 16	7/8 - 14	0.391	9.9	1	0.50	12.7	1.60	40.6	-910
748HOB SS 1/2'' / 12MM X 1 1/16''-12	1/2	12	3/4 - 16	1 1/16 - 12	0.391	9.9	1 1/4	0.59	15.1	1.76	44.7	-912
748HOB SS 5/8'' / 16MM X 7/8''-14	5/8	16	7/8 - 14	7/8 - 14	0.484	12.3	1	0.50	12.7	1.70	43.2	-910
748HOB SS 5/8'' / 16MM X 3/4''-16	5/8	16	7/8 - 14	3/4 - 16	0.484	12.3	15/16	0.44	11.1	1.60	40.6	-908
748HOB SS 5/8'' / 16MM X 1 1/16''-12	5/8	16	7/8 - 14	1 1/16 - 12	0.484	12.3	1 1/4	0.59	15.1	1.86	47.2	-912
748HOB SS 3/4'' / 18MM X 1 1/16''-12	3/4	18	1 1/16 - 12	1 1/16 - 12	0.609	15.5	1 1/4	0.59	15.1	1.97	50.0	-912
748HOB SS 3/4'' / 18MM X 3/4''-16	3/4	18	1 1/16 - 12	3/4 - 16	0.420	10.7	1 1/8	0.44	11.1	1.78	45.2	-908
748HOB SS 3/4'' / 18MM X 7/8''-14	3/4	18	1 1/16 - 12	7/8 - 14	0.50	12.7	1 1/8	0.50	12.7	1.83	46.4	-910
748HOB SS 3/4'' / 18MM X 1 5/16''-12	3/4	18	1 1/16 - 12	1 5/16 - 12	0.609	15.5	1 1/2	0.59	15.1	2.00	50.8	-916
748HOB SS 7/8'' / 20MM X 1 3/16''-12	7/8	20	1 3/16 - 12	1 3/16 - 12	0.719	18.3	1 3/8	0.59	15.1	1.99	50.5	-914
748HOB SS 7/8'' / 20MM X 1 5/16''-12	7/8	20	1 3/16 - 12	1 5/16 - 12	0.719	18.3	1 1/2	0.59	15.1	2.02	51.3	-916
748HOB SS 1'' / 25MM X 1 1/16''-12	1	25	1 5/16 - 12	1 1/16 - 12	0.650	16.7	1 3/8	0.59	15.1	2.01	51.1	-912
748HOB SS 1'' / 25MM X 1 3/16''-12	1	25	1 5/16 - 12	1 3/16 - 12	0.719	18.3	1 3/8	0.59	15.1	2.04	51.8	-914
748HOB SS 1'' / 25MM X 1 5/16''-12	1	25	1 5/16 - 12	1 5/16 - 12	0.844	21.5	1 1/2	0.59	15.1	2.04	51.8	-916

Dimensions are for reference only, and are subject to change without notice.

749 HF

MALE ELBOW

S.A.E. 070202

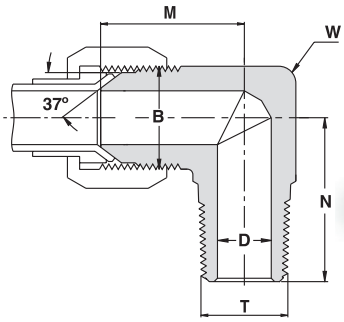

Ordering Information	Tube O.D.		B UN	T NPT	D		W Wrench Flat	M		N	
	inch	mm			inch	mm	inch	inch	mm	inch	mm
749HF SS 1/8'' X 1/8''	1/8	-	5/16 - 24	1/8 - 27	0.062	1.6	7/16	0.77	19.6	0.72	18.3
749HF SS 3/16'' X 1/8''	3/16	-	3/8 - 24	1/8 - 27	0.125	3.2	1/2	0.83	21.1	0.72	18.3
749HF SS 1/4'' / 6MM X 1/8''	1/4	6	7/16 - 20	1/8 - 27	0.172	4.4	1/2	0.89	22.6	0.78	19.8
749HF SS 1/4'' / 6MM X 1/4''	1/4	6	7/16 - 20	1/4 - 18	0.172	4.4	5/8	1.06	26.9	1.09	27.7
749HF SS 5/16'' / 8MMX 1/8''	5/16	8	1/2 - 20	1/8 - 27	0.190	4.8	5/8	0.95	24.1	0.78	19.8
749HF SS 5/16'' / 8MM X 1/4''	5/16	8	1/2 - 20	1/4 - 18	0.234	6.0	5/8	1.06	26.9	1.09	27.7
749HF SS 3/8'' / 10MMX 1/8''	3/8	10	9/16 - 18	1/8 - 27	0.190	4.8	5/8	1.06	26.9	0.90	22.8
749HF SS 3/8'' / 10MM X 1/4''	3/8	10	9/16 - 18	1/4 - 18	0.280	7.1	5/8	1.06	26.9	1.09	27.7
749HF SS 3/8'' / 10MM X 3/8''	3/8	10	9/16 - 18	3/8 - 18	0.297	7.5	13/16	1.14	29.0	1.22	31.0
749HF SS 3/8'' / 10MM X 1/2''	3/8	10	9/16 - 18	1/2 - 14	0.297	7.5	15/16	1.23	31.2	1.47	37.3
749HF SS 1/2'' / 12MM X 1/4''	1/2	12	3/4 - 16	1/4 - 18	0.280	7.1	15/16	1.25	31.8	1.22	31.0
749HF SS 1/2'' / 12MM X 3/8''	1/2	12	3/4 - 16	3/8 - 18	0.380	9.5	15/16	1.25	31.8	1.22	31.0
749HF SS 1/2'' / 12MM X 1/2''	1/2	12	3/4 - 16	1/2 - 14	0.391	9.9	15/16	1.33	33.7	1.47	37.3
749HF SS 1/2'' / 12MM X 3/4''	1/2	12	3/4 - 16	3/4 - 14	0.391	9.9	1 1/8	1.42	36.0	1.59	40.4
749HF SS 5/8'' / 16MM X 3/8''	5/8	16	7/8 - 14	3/8 - 18	0.380	9.5	15/16	1.45	36.8	1.30	33.0
749HF SS 5/8'' / 16MM X 1/2''	5/8	16	7/8 - 14	1/2 - 14	0.470	11.9	15/16	1.45	36.8	1.47	37.3
749HF SS 5/8'' / 16MM X 3/4''	5/8	16	7/8 - 14	3/4 - 14	0.484	12.3	1 1/8	1.53	38.9	1.59	40.4
749HF SS 3/4'' / 18MM X 1/2''	3/4	18	1 1/16 - 12	1/2 - 14	0.470	11.9	1 1/8	1.66	41.0	1.59	40.4
749HF SS 3/4'' / 18MM X 3/4''	3/4	18	1 1/16 - 12	3/4 - 14	0.609	15.5	1 1/8	1.66	41.0	1.59	40.4
749HF SS 7/8'' / 20MM X 3/4''	7/8	20	1 3/16 - 12	3/4 - 14	0.719	18.3	1 3/8	1.73	43.9	1.69	42.9
749HF SS 1'' / 25MM X 3/4''	1	25	1 5/16 - 12	3/4 - 14	0.719	18.3	1 3/8	1.81	46.0	1.78	45.2
749HF SS 1'' / 25MM X 1''	1	25	1 5/16 - 12	1-11.5	0.844	21.5	1 3/8	1.81	46.0	1.97	50.0
749HF SS 1 1/4'' / 32MM X 1''	1 1/4	32	1 5/8 - 12	1-11.5	0.844	21.5	2	2.06	52.3	2.35	59.6
749HF SS 1 1/4'' / 32MM X 1 1/4''	1 1/4	32	1 5/8 - 12	1 1/4 -11.5	1.078	27.5	2	2.06	52.3	2.38	60.5
749HF SS 1 1/2'' / 38MM X 1 1/2''	1 1/2	38	1 7/8 - 12	1 1/2 -11.5	1.312	33.0	*2	2.33	59.2	2.64	67.1
749HF SS 2'' X 2''	2	-	2 1/2 - 12	2 -11.5	1.781	45.0	*2 5/8	3.06	77.7	3.00	76.2

*Not from Forging

Dimensions are for reference only, and are subject to change without notice.

750 HF

FEMALE ELBOW

S.A.E. 070203

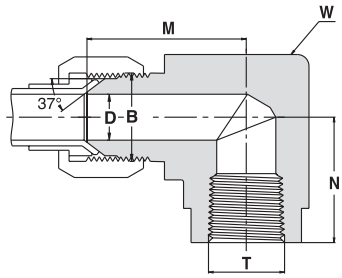

Ordering Information	Tube O.D.		B UN	T NPT	D		W Wrench Flat	M		N	
	inch	mm			inch	mm	inch	inch	mm	inch	mm
750HF SS 1/8'' X 1/8''	1/8	-	5/16 - 24	1/8 - 27	0.062	1.6	5/8	1.00	25.4	0.66	16.8
750HF SS 3/16'' X 1/8''	3/16	-	3/8 - 24	1/8 - 27	0.125	3.2	5/8	1.03	26.2	0.66	16.8
750HF SS 1/4'' / 6MM X 1/8''	1/4	6	7/16 - 20	1/8 - 27	0.172	4.4	5/8	1.08	27.4	0.66	16.8
750HF SS 1/4'' / 6MM X 1/4''	1/4	6	7/16 - 20	1/4 - 18	0.172	4.4	13/16	1.22	30.9	0.88	22.4
750HF SS 5/16'' / 8MM X 1/8''	5/16	8	1/2 - 20	1/8 - 27	0.234	6.0	5/8	1.08	27.4	0.66	16.8
750HF SS 5/16'' / 8MM X 1/4''	5/16	8	1/2 - 20	1/4 - 18	0.234	6.0	13/16	1.22	30.9	0.88	22.4
750HF SS 3/8'' / 10MM X 1/8''	3/8	10	9/16 - 18	1/8 - 27	0.297	7.5	5/8	1.06	26.9	0.66	16.8
750HF SS 3/8'' / 10MM X 1/4''	3/8	10	9/16 - 18	1/4 - 18	0.297	7.5	13/16	1.23	31.2	0.88	22.4
750HF SS 3/8'' / 10MM X 3/8''	3/8	10	9/16 - 18	3/8 - 18	0.297	7.5	15/16	1.31	33.2	1.02	25.9
750HF SS 1/2'' / 12MM X 1/4''	1/2	12	3/4 - 16	1/4 - 18	0.391	9.9	13/16	1.25	31.6	0.88	22.4
750HF SS 1/2'' / 12MM X 3/8''	1/2	12	3/4 - 16	3/8 - 18	0.391	9.9	15/16	1.42	36.1	1.02	25.9
750HF SS 1/2'' / 12MM X 1/2''	1/2	12	3/4 - 16	1/2 - 14	0.391	9.9	1 1/8	1.42	36.1	1.23	31.2
750HF SS 5/8'' / 16MM X 1/2''	5/8	16	7/8 - 14	1/2 - 14	0.484	12.3	1 1/8	1.64	41.5	1.23	31.2
750HF SS 3/4'' / 18MM X 1/2''	3/4	18	1 1/16 - 12	1/2 - 14	0.609	15.5	1 3/8	1.66	42.1	1.23	31.2
750HF SS 3/4'' / 18MM X 3/4''	3/4	18	1 1/16 - 12	3/4 - 14	0.609	15.5	1 3/8	1.89	48.0	1.36	34.5
750HF SS 7/8'' / 20MM X 3/4''	7/8	20	1 3/16 - 12	3/4 - 14	0.719	18.3	1 3/8	1.86	47.2	1.42	36.1
750HF SS 1'' / 25MM X 1''	1	25	1 5/16 - 12	1 - 11.5	0.844	21.5	1 5/8	2.17	55.1	1.62	41.1
750HF SS 1 1/4'' / 32MM X 1 1/4''	1 1/4	32	1 5/8 - 12	1 1/4 -11.5	1.078	27.5	*2 1/8	2.33	59.2	1.70	43.2
750HF SS 1 1/2'' / 38MM X 1 1/2''	1 1/2	38	1 7/8 - 12	1 1/2 -11.5	1.312	33.0	*2 3/8	2.89	73.4	2.08	52.8
750HF SS 2'' X 2''	2	-	2 1/2 - 12	2 -11.5	1.781	45.0	*2 7/8	3.30	83.8	2.39	60.7

*Not from Forging

Dimensions are for reference only, and are subject to change without notice.

751 HF

MALE RUN TEE

S.A.E. 070424

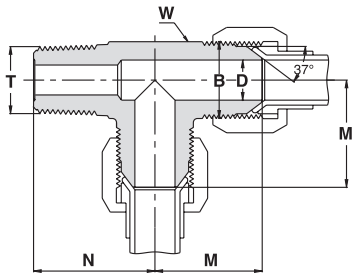

Ordering Information	Tube O.D.		B UN	T NPT	D		W Wrench Flat	M		N	
	inch	mm			inch	mm	inch	inch	mm	inch	mm
751HF SS 1/8'' X 1/8''	1/8	-	5/16 - 24	1/8 - 27	0.062	1.6	7/16	0.77	19.6	0.72	18.3
751HF SS 3/16'' X 1/8''	3/16	-	3/8 - 24	1/8 - 27	0.125	3.2	1/2	0.83	21.1	0.72	18.3
751HF SS 1/4'' / 6MM X 1/8''	1/4	6	7/16 - 20	1/8 - 27	0.172	4.4	1/2	0.89	22.6	0.78	19.8
751HF SS 1/4'' / 6MM X 1/4''	1/4	6	7/16 - 20	1/4 - 18	0.172	4.4	5/8	1.06	26.9	1.09	27.7
751HF SS 5/16'' / 8MM X 1/8''	5/16	8	1/2 - 20	1/8 - 27	0.190	4.8	5/8	0.95	24.1	0.78	19.8
751HF SS 5/16'' / 8MM X 1/4''	5/16	8	1/2 - 20	1/4 - 18	0.234	6.0	5/8	1.06	26.9	1.09	27.7
751HF SS 3/8'' / 10MM X 1/8''	3/8	10	9/16 - 18	1/8 - 27	0.190	4.8	5/8	1.06	26.9	0.90	22.8
751HF SS 3/8'' / 10MM X 1/4''	3/8	10	9/16 - 18	1/4 - 18	0.280	7.1	5/8	1.06	26.9	1.09	27.7
751HF SS 3/8'' / 10MM X 3/8''	3/8	10	9/16 - 18	3/8 - 18	0.297	7.5	13/16	1.14	29.0	1.22	31.0
751HF SS 3/8'' / 10MM X 1/2''	3/8	10	9/16 - 18	1/2 - 14	0.297	7.5	15/16	1.23	31.2	1.47	37.3
751HF SS 1/2'' / 12MM X 1/4''	1/2	12	3/4 - 16	1/4 - 18	0.280	7.1	15/16	1.25	31.8	1.22	31.0
751HF SS 1/2'' / 12MM X 3/8''	1/2	12	3/4 - 16	3/8 - 18	0.380	9.5	15/16	1.25	31.8	1.22	31.0
751HF SS 1/2'' / 12MM X 1/2''	1/2	12	3/4 - 16	1/2 - 14	0.391	9.9	15/16	1.33	33.7	1.47	37.3
751HF SS 1/2'' / 12MM X 3/4''	1/2	12	3/4 - 16	3/4 - 14	0.391	9.9	1 1/8	1.42	36.0	1.59	40.4
751HF SS 5/8'' / 16MM X 3/8''	5/8	16	7/8 - 14	3/8 - 18	0.380	9.5	15/16	1.45	36.8	1.30	33.0
751HF SS 5/8'' / 16MM X 1/2''	5/8	16	7/8 - 14	1/2 - 14	0.470	11.9	15/16	1.45	36.8	1.47	37.3
751HF SS 5/8'' / 16MM X 3/4''	5/8	16	7/8 - 14	3/4 - 14	0.484	12.3	1 1/8	1.53	38.9	1.59	40.4
751HF SS 3/4'' / 18MM X 1/2''	3/4	18	1 1/16 - 12	1/2 - 14	0.470	11.9	1 1/8	1.66	41.0	1.59	40.4
751HF SS 3/4'' / 18MM X 3/4''	3/4	18	1 1/16 - 12	3/4 - 14	0.609	15.5	1 1/8	1.66	41.0	1.59	40.4
751HF SS 7/8'' / 20MM X 3/4''	7/8	20	1 3/16 - 12	3/4 - 14	0.719	18.3	1 3/8	1.73	43.9	1.69	42.9
751HF SS 1'' / 25MM X 3/4''	1	25	1 5/16 - 12	3/4 - 14	0.719	18.3	1 3/8	1.81	46.0	1.78	45.2
751HF SS 1'' / 25MM X 1''	1	25	1 5/16 - 12	1 - 11.5	0.844	21.5	1 3/8	1.81	46.0	1.97	50.0
751HF SS 1 1/4'' / 32MM X 1''	1 1/4	32	1 5/8 - 12	1 - 11.5	0.844	21.5	*2	2.06	52.3	2.35	59.6
751HF SS 1 1/4'' / 32MM X 1 1/4''	1 1/4	32	1 5/8 - 12	1 1/4 -11.5	1.078	27.5	*2	2.06	52.3	2.38	60.5
751HF SS 1 1/2'' / 38MM X 1 1/2''	1 1/2	38	1 7/8 - 12	1 1/2 -11.5	1.312	33.0	*2	2.33	59.2	2.64	67.1
751HF SS 2'' X 2''	2	-	2 1/2 - 12	2 -11.5	1.781	45.0	*2 5/8	3.06	77.7	3.00	76.2

*Not from Forging

Dimensions are for reference only, and are subject to change without notice.

755 HF

UNION ELBOW

S.A.E. 070201

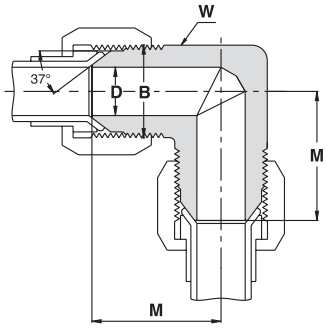

Ordering Information	Tube O.D.		B UN	D		W Wrench Flat	M	
	inch	mm		inch	mm	inch	inch	mm
755HF SS 1/8''	1/8	-	5/16 - 24	0.062	1.6	7/16	0.77	19.6
755HF SS 3/16''	3/16	-	3/8 - 24	0.125	3.2	1/2	0.83	21.1
755HF SS 1/4'' / 6MM	1/4	6	7/16 - 20	0.172	4.4	1/2	0.89	22.6
755HF SS 5/16'' / 8MM	5/16	8	1/2 - 20	0.234	6.0	5/8	0.95	24.1
755HF SS 3/8'' / 10MM	3/8	10	9/16 - 18	0.297	7.5	5/8	1.06	26.9
755HF SS 1/2'' / 12MM	1/2	12	3/4 - 16	0.391	9.9	15/16	1.25	31.8
755HF SS 5/8'' / 16MM	5/8	16	7/8 - 14	0.484	12.3	15/16	1.45	36.8
755HF SS 3/4'' / 18MM	3/4	18	1 1/16 - 12	0.609	15.5	1 3/8	1.66	42.2
755HF SS 7/8'' / 20MM	7/8	20	1 3/16 - 12	0.719	18.3	1 3/8	1.80	45.7
755HF SS 1'' / 25MM	1	25	1 5/16 - 12	0.844	21.5	1 3/8	1.81	46.0
755HF SS 1 1/4'' / 32MM	1 1/4	32	1 5/8 - 12	1.078	27.5	2	2.06	52.3
755HF SS 1 1/2'' / 38MM	1 1/2	38	1 7/8 - 12	1.312	33.0	*2	2.33	59.2
755HF SS 2''	2	-	2 1/2 - 12	1.781	45.0	*2 5/8	3.06	77.7

*Not from Forging

Dimensions are for reference only, and are subject to change without notice.

771 HFL

FEMALE RUN TEE

S.A.E. 070426

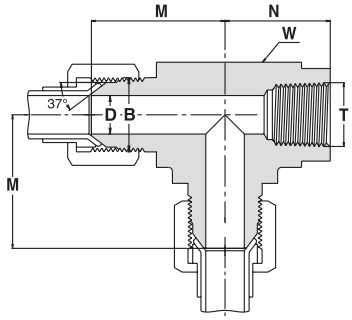

Ordering Information	TUBE O.D.		B UN	T NPT	D		W Wrench Flat	M		N	
	inch	mm			inch	mm	inch	inch	mm	inch	mm
771HFL SS 1/8'' X 1/8''	1/8	-	5/16 - 24	1/8 - 27	0.062	1.6	5/8	1.00	25.4	0.66	16.8
771HFL SS 3/16'' X 1/8''	3/16	-	3/8 - 24	1/8 - 27	0.125	3.2	5/8	1.03	26.2	0.66	16.8
771HFL SS 1/4'' / 6MM X 1/8''	1/4	6	7/16 - 20	1/8 - 27	0.172	4.4	5/8	1.08	27.4	0.66	16.8
771HFL SS 1/4'' / 6MM X 1/4''	1/4	6	7/16 - 20	1/4 - 18	0.172	4.4	13/16	1.22	30.9	0.88	22.4
771HFL SS 5/16'' / 8MM X 1/8''	5/16	8	1/2 - 20	1/8 - 27	0.234	6.0	5/8	1.08	27.4	0.66	16.8
771HFL SS 5/16'' / 8MM X 1/4''	5/16	8	1/2 - 20	1/4 - 18	0.234	6.0	13/16	1.22	30.9	0.88	22.4
771HFL SS 3/8'' / 10MM X 1/8''	3/8	10	9/16 - 18	1/8 - 27	0.297	7.5	5/8	1.06	26.9	0.66	16.8
771HFL SS 3/8'' / 10MM X 1/4''	3/8	10	9/16 - 18	1/4 - 18	0.297	7.5	13/16	1.23	31.2	0.88	22.4
771HFL SS 3/8'' / 10MM X 3/8''	3/8	10	9/16 - 18	3/8 - 18	0.297	7.5	15/16	1.31	33.2	1.02	25.9
771HFL SS 1/2'' / 12MM X 1/4''	1/2	12	3/4 - 16	1/4 - 18	0.391	9.9	13/16	1.25	31.6	0.88	22.4
771HFL SS 1/2'' / 12MM X 3/8''	1/2	12	3/4 - 16	3/8 - 18	0.391	9.9	15/16	1.42	36.1	1.02	25.9
771HFL SS 1/2'' / 12MM X 1/2''	1/2	12	3/4 - 16	1/2 - 14	0.391	9.9	1 1/8	1.42	36.1	1.23	31.2
771HFL SS 5/8'' / 16MM X 1/2''	5/8	16	7/8 - 14	1/2 - 14	0.484	12.3	1 1/8	1.64	41.5	1.23	31.2
771HFL SS 3/4'' / 18MM X 1/2''	3/4	18	1 1/16 - 12	1/2 - 14	0.609	15.5	1 3/8	1.66	42.1	1.23	31.2
771HFL SS 3/4'' / 18MM X 3/4''	3/4	18	1 1/16 - 12	3/4 - 14	0.609	15.5	1 3/8	1.89	48.0	1.36	34.5
771HFL SS 7/8'' / 20MM X 3/4''	7/8	20	1 3/16 - 12	3/4 - 14	0.719	18.3	1 3/8	1.86	47.2	1.42	36.1
771HFL SS 1'' / 25MM X 1''	1	25	1 5/16 - 12	1 - 11.5	0.844	21.5	*1 5/8	2.17	55.1	1.62	41.1
771HFL SS 1 1/4'' / 32MM X 1 1/4''	1 1/4	32	1 5/8 - 12	1 1/4 -11.5	1.078	27.5	*2 1/8	2.33	59.2	1.70	43.2
771HFL SS 1 1/2'' / 38MM X 1 1/2''	1 1/2	38	1 7/8 - 12	1 1/2 -11.5	1.312	33.0	*2 3/8	2.89	73.4	2.08	52.8
771HFL SS 2'' X 2''	2	-	2 1/2 - 12	2 -11.5	1.781	45.0	*2 7/8	3.30	83.8	2.39	60.7

*Not from Forging

Dimensions are for reference only, and are subject to change without notice.

772 HFL

FEMALE BRANCH TEE

S.A.E. 070427

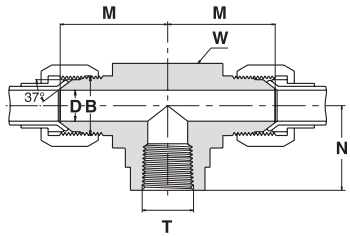

Ordering Information	Tube O.D.		B UN	T NPT	D		W Wrench Flat	M		N	
	inch	mm			inch	mm	inch	inch	mm	inch	mm
772HFL SS 1/8'' X 1/8''	1/8	-	5/16 - 24	1/8 - 27	0.062	1.6	5/8	1.00	25.4	0.66	16.8
772HFL SS 3/16'' X 1/8''	3/16	-	3/8 - 24	1/8 - 27	0.125	3.2	5/8	1.03	26.2	0.66	16.8
772HFL SS 1/4'' / 6MM X 1/8''	1/4	6	7/16 - 20	1/8 - 27	0.172	4.4	5/8	1.08	27.4	0.66	16.8
772HFL SS 1/4'' / 6MM X 1/4''	1/4	6	7/16 - 20	1/4 - 18	0.172	4.4	13/16	1.22	30.9	0.88	22.4
772HFL SS 5/16'' / 8MM X 1/8''	5/16	8	1/2 - 20	1/8 - 27	0.234	6.0	5/8	1.08	27.4	0.66	16.8
772HFL SS 5/16'' / 8MM X 1/4''	5/16	8	1/2 - 20	1/4 - 18	0.234	6.0	13/16	1.22	30.9	0.88	22.4
772HFL SS 3/8'' / 10MM X 1/8''	3/8	10	9/16 - 18	1/8 - 27	0.297	7.5	5/8	1.06	26.9	0.66	16.8
772HFL SS 3/8'' / 10MM X 1/4''	3/8	10	9/16 - 18	1/4 - 18	0.297	7.5	13/16	1.23	31.2	0.88	22.4
772HFL SS 3/8'' / 10MM X 3/8''	3/8	10	9/16 - 18	3/8 - 18	0.297	7.5	15/16	1.31	33.2	1.02	25.9
772HFL SS 1/2'' / 12MM X 1/4''	1/2	12	3/4 - 16	1/4 - 18	0.391	9.9	13/16	1.25	31.6	0.88	22.4
772HFL SS 1/2'' / 12MM X 3/8''	1/2	12	3/4 - 16	3/8 - 18	0.391	9.9	15/16	1.42	36.1	1.02	25.9
772HFL SS 1/2'' / 12MM X 1/2''	1/2	12	3/4 - 16	1/2 - 14	0.391	9.9	1 1/8	1.42	36.1	1.23	31.2
772HFL SS 5/8'' / 16MM X 1/2''	5/8	16	7/8 - 14	1/2 - 14	0.484	12.3	1 1/8	1.64	41.5	1.23	31.2
772HFL SS 3/4'' / 18MM X 1/2''	3/4	18	1 1/16 - 12	1/2 - 14	0.609	15.5	1 3/8	1.66	42.1	1.23	31.2
772HFL SS 3/4'' / 18MM X 3/4''	3/4	18	1 1/16 - 12	3/4 - 14	0.609	15.5	1 3/8	1.89	48.0	1.36	34.5
772HFL SS 7/8'' / 20MM X 3/4''	7/8	20	1 3/16 - 12	3/4 - 14	0.719	18.3	1 3/8	1.86	47.2	1.42	36.1
772HFL SS 1'' / 25MM X 1''	1	25	1 5/16 - 12	1 - 11.5	0.844	21.5	*1 5/8	2.17	55.1	1.62	41.1
772HFL SS 1 1/4'' / 32MM X 1 1/4''	1 1/4	32	1 5/8 - 12	1 1/4 -11.5	1.078	27.5	*2 1/8	2.33	59.2	1.70	43.2
772HFL SS 1 1/2'' / 38MM X 1 1/2''	1 1/2	38	1 7/8 - 12	1 1/2 -11.5	1.312	33.0	*2 3/8	2.89	73.4	2.08	52.8
772HFL SS 2'' X 2''	2	-	2 1/2 - 12	2 -11.5	1.781	45.0	*2 7/8	3.30	83.8	2.39	60.7

*Not from Forging

Dimensions are for reference only, and are subject to change without notice.

774 HFL

BULKHEAD UNION

S.A.E. 070601

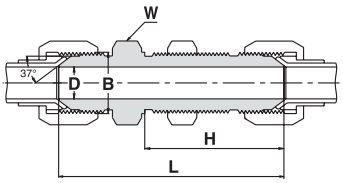

Ordering Information	Tube O.D.		B UN	D		W Hex. Flat	H		L	
	inch	mm		inch	mm	inch	inch	mm	inch	mm
774HFL SS 3/16''	3/16	-	3/8 - 24	0.125	3.2	5/8	1.11	28.2	1.90	48.3
774HFL SS 1/4'' / 6MM	1/4	6	7/16 - 20	0.172	4.4	11/16	1.20	30.5	2.07	52.6
774HFL SS 5/16'' / 8MM	5/16	8	1/2 - 20	0.234	6.0	3/4	1.20	30.5	2.07	52.6
774HFL SS 3/8'' / 10MM	3/8	10	9/16 - 18	0.297	7.5	13/16	1.28	32.5	2.18	55.4
774HFL SS 1/2'' / 12MM	1/2	12	3/4 - 16	0.391	9.9	1	1.44	36.6	2.44	62.0
774HFL SS 5/8'' / 16MM	5/8	16	7/8 - 14	0.484	12.3	1 1/8	1.58	40.1	2.74	69.6
774HFL SS 3/4'' / 18MM	3/4	18	1 1/16 - 12	0.609	15.5	1 3/8	1.75	44.4	3.09	78.5
774HFL SS 7/8'' / 20MM	7/8	20	1 3/16 - 12	0.719	18.3	1 1/2	1.75	44.4	3.12	79.2
774HFL SS 1'' / 25MM	1	25	1 5/16 - 12	0.844	21.5	1 5/8	1.75	44.4	3.14	79.8
774HFL SS 1 1/4'' / 32MM	1 1/4	32	1 5/8 - 12	1.078	27.5	1 7/8	1.80	45.7	3.31	84.1
774HFL SS 1 1/2'' / 38MM	1 1/2	38	1 7/8 - 12	1.312	33.0	2 1/8	1.81	46.0	3.52	89.4
774HFL SS 2''	2	-	2 1/2 - 12	1.781	45.0	2 3/4	2.09	53.1	4.20	106.7

774 HFLN

BULKHEAD LOCKNUT

S.A.E. 070118

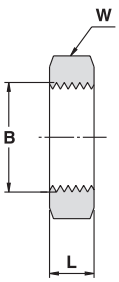

Ordering Information	Tube O.D.	B UNF	W Hex. Flat	L	
	inch		inch	inch	mm
774HFLN SS 3/16''	3/16	3/8 - 24	5/8	0.22	5.6
774HFLN SS 1/4'' / 6MM	1/4	7/16 - 20	11/16	0.25	6.4
774HFLN SS 5/16'' / 8MM	5/16	1/2 - 20	3/4	0.25	6.4
774HFLN SS 3/8'' / 10MM	3/8	9/16 - 18	13/16	0.27	6.9
774HFLN SS 1/2'' / 12MM	1/2	3/4 - 16	1	0.31	7.9
774HFLN SS 5/8'' / 16MM	5/8	7/8 - 14	1 1/8	0.36	9.1
774HFLN SS 3/4'' / 18MM	3/4	1 1/16 - 12	1 3/8	0.41	10.4
774HFLN SS 7/8'' / 20MM	7/8	1 3/16 - 12	1 1/2	0.41	10.4
774HFLN SS 1'' / 25MM	1	1 5/16 - 12	1 5/8	0.41	10.4
774HFLN SS 1 1/4'' / 32MM	1 1/4	1 5/8 - 12	1 7/8	0.41	10.4
774HFLN SS 1 1/2'' / 38MM	1 1/2	1 7/8 - 12	2 1/8	0.41	10.4
774HFLN SS 2''	2	1 1/2 - 12	2 3/4	0.41	10.4

Dimensions are for reference only, and are subject to change without notice.

7102 HFL
CROSS
S.A.E. 070501

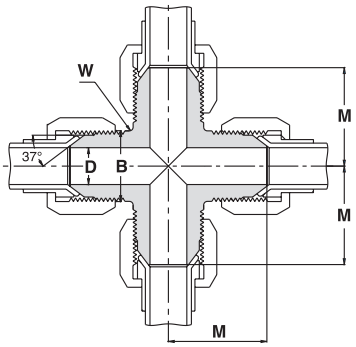

Ordering Information	Tube O.D.		B UN	D		W Wrench Flat	M	
	inch	mm		inch	mm	inch	inch	mm
7102HFL SS 1/8''	1/8	-	5/16 - 24	0.062	1.6	7/16	0.77	19.6
7102HFL SS 3/16''	3/16	-	3/8 - 24	0.125	3.2	1/2	0.83	21.1
7102HFL SS 1/4'' / 6MM	1/4	6	7/16 - 20	0.172	4.4	1/2	0.89	22.6
7102HFL SS 5/16'' / 8MM	5/16	8	1/2 - 20	0.234	6.0	5/8	0.95	24.1
7102HFL SS 3/8'' / 10MM	3/8	10	9/16 - 18	0.297	7.5	5/8	1.06	26.9
7102HFL SS 1/2'' / 12MM	1/2	12	3/4 - 16	0.391	9.9	13/16	1.25	31.8
7102HFL SS 5/8'' / 16MM	5/8	16	7/8 - 14	0.484	12.3	*15/16	1.45	36.8
7102HFL SS 3/4'' / 18MM	3/4	18	1 1/16 - 12	0.609	15.5	*1 1/8	1.66	42.2
7102HFL SS 7/8'' / 20MM	7/8	20	1 3/16 - 12	0.719	18.3	*1 3/8	1.80	45.7
7102HFL SS 1'' / 25MM	1	25	1 5/16 - 12	0.844	21.5	*1 3/8	1.81	46.0
7102HFL SS 1 1/4'' / 32MM	1 1/4	32	1 5/8 - 12	1.078	27.5	*1 11/16	2.06	51.0
7102HFL SS 1 1/2'' / 38MM	1 1/2	38	1 7/8 - 12	1.312	33.0	*2	2.33	59.2
7102HFL SS 2''	2	-	2 1/2 - 12	1.781	45.0	*2 5/8	3.06	77.7

*Not from Forging

Dimensions are for reference only, and are subject to change without notice.

7639 HF
TUBE PLUG
S.A.E. 070109

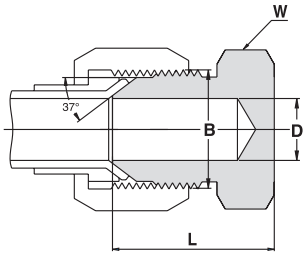

Ordering Information	Tube O.D.		B UN	D		W Hex. flat	L	
	inch	mm		inch	mm	inch	inch	mm
7639HF SS 1/8''	1/8	-	5/16 - 24	0.062	1.6	7/16	0.70	17.8
7639HF SS 3/16''	3/16	-	3/8 - 24	0.125	3.2	7/16	0.73	18.5
7639HF SS 1/4'' / 6MM	1/4	6	7/16 - 20	0.172	4.4	1/2	0.80	20.3
7639HF SS 5/16'' / 8MM	5/16	8	1/2 - 20	0.234	6.0	9/16	0.80	20.3
7639HF SS 3/8'' / 10MM	3/8	10	9/16 - 18	0.297	7.5	5/8	0.84	21.3
7639HF SS 1/2'' / 12MM	1/2	12	3/4 - 16	0.391	9.9	13/16	0.94	23.9
7639HF SS 5/8'' / 16MM	5/8	16	7/8 - 14	0.484	12.3	15/16	1.10	27.9
7639HF SS 3/4'' / 18MM	3/4	18	1 1/16 - 12	0.609	15.5	1 1/8	1.28	32.5
7639HF SS 7/8'' / 20MM	7/8	20	1 3/16 - 12	0.719	18.3	1 1/4	1.31	33.3
7639HF SS 1'' / 25MM	1	25	1 5/16 - 12	0.844	21.5	1 3/8	1.33	33.8
7639HF SS 1 1/4'' / 32MM	1 1/4	32	1 5/8 - 12	1.078	27.5	1 11/16	1.45	36.8
7639HF SS 1 1/2'' / 38MM	1 1/2	38	1 7/8 - 12	1.312	33.0	2	1.65	41.9
7639HF SS 2''	2	-	2 1/2 - 12	1.781	45.0	2 5/8	2.05	52.1

7640 HF
CAP
S.A.E. 070112

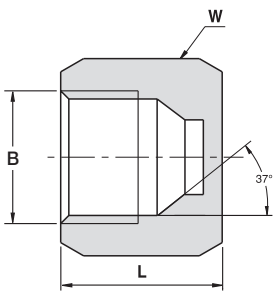

Ordering Information	TUBE O.D.	B UN	W Hex. Flat	L	
	inch		inch	inch	mm
7640HF SS 1/8''	1/8	5/16 - 24	3/8	0.550	12.7
7640HF SS 3/16''	3/16	3/8 - 24	7/16	0.562	14.3
7640HF SS 1/4'' / 6MM	1/4	7/16 - 20	9/16	0.594	15.1
7640HF SS 5/16'' / 8MM	5/16	1/2 - 20	5/8	0.609	15.5
7640HF SS 3/8'' / 10MM	3/8	9/16 - 18	11/16	0.625	15.9
7640HF SS 1/2'' / 12MM	1/2	3/4 - 16	7/8	0.750	19.0
7640HF SS 5/8'' / 16MM	5/8	7/8 - 14	1	0.844	21.4
7640HF SS 3/4'' / 18MM	3/4	1 1/16 - 12	1 1/4	0.906	23.0
7640HF SS 7/8'' / 20MM	7/8	1 3/16 - 12	1 3/8	0.969	24.6
7640HF SS 1'' / 25MM	1	1 5/16 - 12	1 1/2	1.016	25.8
7640HF SS 1 1/4'' / 32MM	1 1/4	1 5/8 - 12	2	1.062	27.0
7640HF SS 1 1/2'' / 38MM	1 1/2	1 7/8 - 12	2 1/4	1.188	30.2
7640HF SS 2''	2	1 1/2 - 12	2 7/8	1.438	36.5

Dimensions are for reference only, and are subject to change without notice.

Dimensions are for reference only, and are subject to change without notice.

UHLINE SERIES

FOR ULTRA VACUUM SYSTEMS

HAM-LET®
ADVANCED CONTROL TECHNOLOGY

UH LINE SERIES

The HAM-LET "**UH**" Series has been designed for ultra-vacuum systems.
Following are some of its special features:

- Finger-tight assembly (with knurled nut)
- Easy removal, easy repositioning in a system
- Helium leak tested to 4X10-9 ATM.cc/sec
- Maximum temperature: 242°C
- Available factory assembly for many HAM-LET® Valves:
  Ball Valve, Needle Valve, Diaphragm Valve, Filter, Check Valve
- All metal parts are 316 stainless steel, O-ring - Viton®.
- Full range of sizes from 1/4" to 1"

768 UH
Male Connector

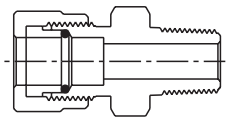

762 UH
Union

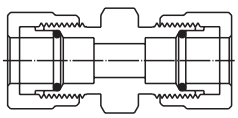

763 UH
Reducing Union

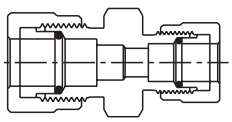

763 LUH
Let-Lok to UH Line

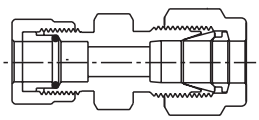

764 UH
Union Tee

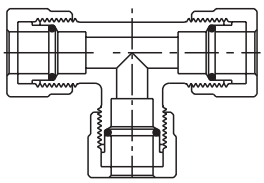

765 UH
Union Elbow

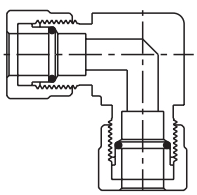

767 UH
UH Line to Tube Adapter

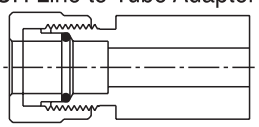

ORDERING INFORMATION

768	UH	SS	1/4	X	1/8
Fitting Type	Series Designator	Meterial Designator	Tube O.D		NPT

* Available bored through. Add "R" to the cat. No.
* Parts can be assembled and packed in a cleanroom class 100, if specified.
* Only items priced in HAM-LET up-to-date price list are standard.
* Price and delivery of non-stock items provided on request.

HI–TECH COMPONENTS

HTC

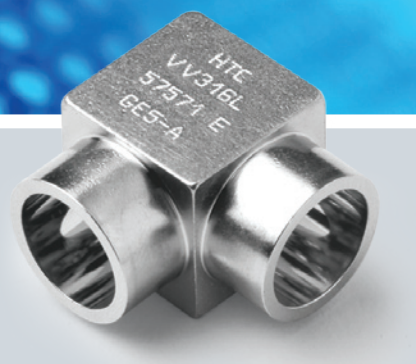

ORBITAL WELD AND METAL GASKET FACE SEAL FITTINGS

HAM-LET®
ADVANCED CONTROL TECHNOLOGY

TECHNICAL INFORMATION

HAM-LET®/HTC® specializes in the design and production of high-quality, specially manufactured valves and fittings for High Purity and Ultra-High Purity applications.

A joint effort of **HTC®**'s expert engineers and technicians resulted in the development a complete line that reflects the company's deep understanding of the critical requirements of the semiconductor, biotech, and pharmaceutical industries.

HAM-LET®/HTC® is a leader in the manufacturing of fittings and valves for clean industries and has consistently spearheaded significant new developments in this field. **HTC®** has broken new ground in surface-finishing techniques by implementing improved electro-polishing processes.

PLATING
Female threads are silver plated to reduce the risk of galling and to improve the remakeability of the fitting. This high-quality plating also reduces the torque required for fitting assembly.
Reference Spec: Meeting and exceeding – Mil Spec: QQ-S-365.
Note: Do not apply any type of cleaning acid and/or electropolishing solutions to any female threads. These solutions damage the silver plating and invalidate any expressed or implied warranty.

WELDING
Options: butt weld, shoulder weld, socket weld. Reference Specs: All welded products are manufactured and welded according to SEMI F75,F81.

TESTING
HAM-LET follows the relevant ASTM, ANSI, ASME, ISO, SEMI & SEMASPEC standards for testing and for qualifying processes and results.

JAPANESE STANDARDS
HAM-LET, upon request, manufactures the HTC product line to meet Japanese standards:

- Low Manganese Material Specifications (JIS)
- Wall thickness
- Hardness

TEMPERATURE RATING

PRODUCTS	MATERIAL	F	C
HTC Face Seal Fittings	SS316L	1000	538
	SS316L Var or Vim / Var[1]	1000	538
HTC Welding Fittings	SS316L	1000	538
	SS316L Var or Vim / Var[1]	1000	538
HTC Gaskets	SS316	1000	538
	NICKEL	1000	538

HELIUM LEAK
All HAM-LET Face Seal products are tested and qualified to a helium leak rate of less than 3x10-10 std cm3/sec.
Reference Spec: SEMI F1.

SURFACE FINISH
Reference Spec: ANSI B46.1 and ISO 4288.

SURFACE ANALYSIS
SEM/EDX/AES analysis is used to monitor surface defects per ASTM F1372 and ASTM F1375.

MOISTURE ANALYSIS
Based on ASTM F1397.

PARTICLE CONTRIBUTION TEST
Based on Semaspec 90120390 B.

SURFACE CHEMISTRY
All UHP products are electropolished with a proprietary process for achieving and exceeding the Sematec Standards of surface cleanliness and anticorrosion requirements. Parameters are measured by SEM, AUGER, ESCA.
Reference Spec: SEMI F19; E49.9; SEMASPEC 91060573A-STD.

CLEANING SPECIFICATIONS
According to # H9800.
Reference Spec: SEMI E49.3.

MATERIAL TRACEABILITY
All HTC components are Heat Coded for full traceability.

ASSEMBLY
According to SEMI E49.6.

ACCESSORIES
Grip Kit, Plastic Bead Protector.

PACKAGING: Each "E" finished component is double bagged to ensure component cleanliness and to protect it from environmental contamination. The inner bag is Nylon 6 and vacuum sealed. The outer bag is polyethylene.
Reference Spec: SEMI E49.1

INTERNATIONAL CERTIFICATIONS
ISO 9001, Certified by S.I.I.

HTC® FITTINGS PRESSURE RATING

Products	Material	Size	Wall Thickness	Pressure Rating psig	Pressure Rating bar
HTC Fittings	316L or 316LV	1/8	0.028	8550	590
		1/4	0.035	5200	359
		3/8	0.035	3350	231
		1/2	0.049	3750	259
		3/4*	0.065	3350	231
		3/4*	0.049	2400	165
		1*	0.065	2400	165

* 3/4" & 1" sizes are not standard, but can be manufactured on request

Pressure ratings are calculated in accordance with ANSI Code for Pressure Piping ANSI B-31, for stainless steel fittings. All working pressures are at 4:1 safety factor.
Pressure indicated in the catalogue is at room temp.

[1] Per SEMI F20-0305

MAKE UP OF GLANDS

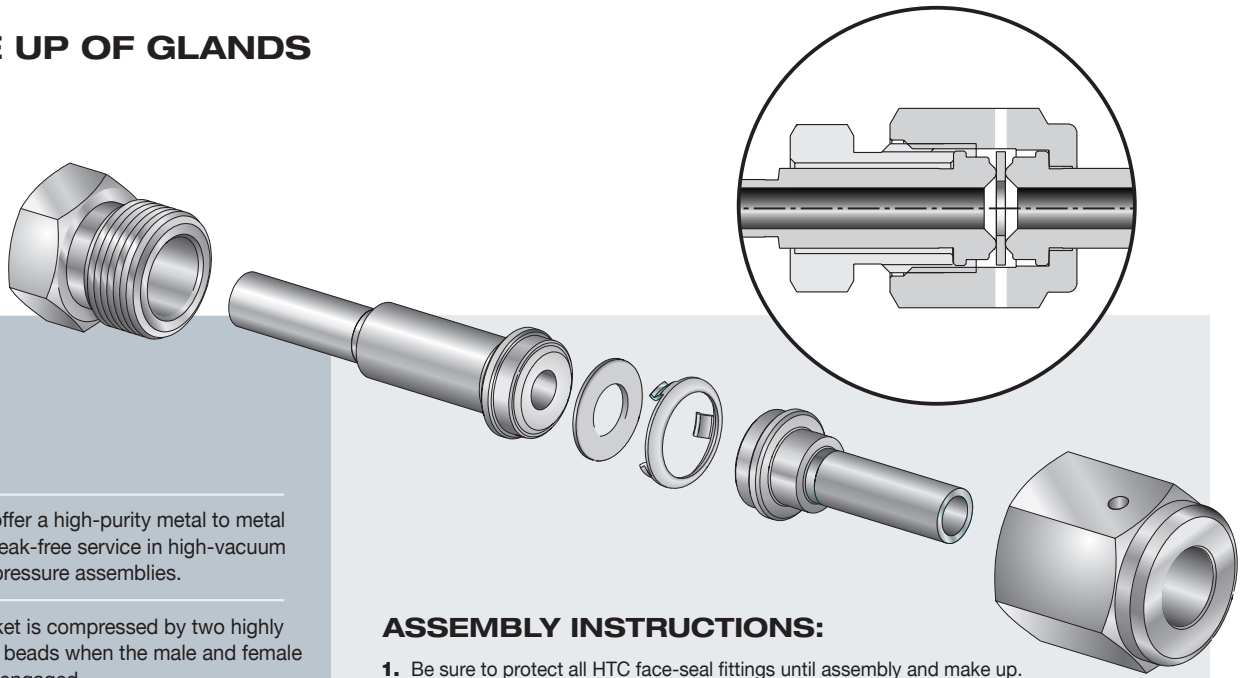

Glands offer a high-purity metal to metal seal for leak-free service in high-vacuum or high-pressure assemblies.

The gasket is compressed by two highly polished beads when the male and female nuts are engaged.

The gland bead-to-bead assembly compresses a soft-metal gasket-to-seal. This assembly can be locked by HAM-LET Grip-Kit (See A below).

Visual test and leak testing are performed through two test ports in opposite locations from the female nut.

ASSEMBLY INSTRUCTIONS:

1. Be sure to protect all HTC face-seal fittings until assembly and make up. Exercise great care so that the sealing surfaces are not scratched, damaged or contaminated in any way during handling and assembly.
2. Always use a clean environment, and always employ proper cleanroom protocol for make up and assembly of high-purity fittings and applications.
3. Make up instructions:
   Tighten the female nut to the male nut/body finger tight.
   Tighten the female nut 1/8 turn past finger tight.
   Always torque the female nut while keeping the male nut/body stationary.
   Face seal connections are remakable - please use a new gasket for each remake.

GRIPKIT ordering information
See page 174

MATERIAL

PRODUCTS	LEVEL "E"			LEVEL "H"		
	TREATMENT	Ra (Microinch)		TREATMENT	Ra (Microinch)	
		MAX	AVERAGE		MAX	AVERAGE
GLANDS	ELECTROPOLISHED	10	5	NON- ELECTROPOLISHED	15	10
MINI BUTTWELD	ELECTROPOLISHED	10	5	NON- ELECTROPOLISHED	15	10
SHAPED UNIONS	ELECTROPOLISHED	10	5	NON- ELECTROPOLISHED	20	15
LONG WELD SHAPED CONNECTORS	ELECTROPOLISHED	10	5	NON- ELECTROPOLISHED	15	10
THREADED STRAIGHT CONNECTORS	ELECTROPOLISHED	10	5	NON- ELECTROPOLISHED	20	15

* **"E"** level - Electropolished ** **"H"** level - Not Electropolished

HTC INDEX

GLANDS

LONG GLAND 148
Without shoulder
GL-W

LONG GLAND 148
With shoulder
GL-S

MALE GLAND 149
Without shoulder
GM-W

SHORT GLAND 149
Without shoulder
GS-W

SHORT GLAND 150
With shoulder
GS-S

MINI SHORT GLAND 150
Without shoulder
MGS-W

MINI SHORT GLAND 151
With shoulder
MGS-S

GLAND ADAPTER TO LET-LOK 151
AG

MALE GLAND 151
Short tube without shoulder
MG-W

SOCKET WELD GLAND 152
GSW

MINI BUTTWELDS

MINI ELBOW 152
Without shoulder
ME-W

MINI ELBOW REDUCER 153
Without shoulder
MER-W

MINI ELBOW 153
45°
Without shoulder
ME-45°-W

MINI ELBOW 154
With extended leg
Without shoulder
MEX-W

MINI TEE 154
Without shoulder
MT-W

MINI TEE REDUCER 155
Without shoulder
MTR-W

MINI CROSS 155
Without shoulder
MC-W

MINI TRI-EL 156
Without shoulder
MTB-W

REDUCING UNION 156
Without shoulder
RU-W

SHAPED UNIONS

ELBOW UNION 157
EU

TEE UNION 157
TU

CROSS UNION 158
CU

MALE ELBOW 158
EM

LONG WELD SHAPED CONNECTORS

ELBOW 159
Without shoulder
EW-W

TEE 159
Without shoulder
TW-W

TEE REDUCER 160
Without shoulder
TWR-W

CROSS 160
Without shoulder
CW-W

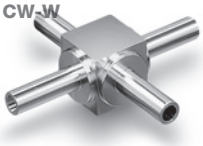

REDUCER 161
Without shoulder
RW-W

BUTTWELD UNION 161
Without shoulder
UB-W

BUTTWELD UNION 162
With shoulder
UB-S

BUTTWELD UNION 162
With locator and shoulder
UBL-S

THREADED STRAIGHT CONNECTORS

MALE UNION 163
UM

MALE TO MALE NPT CONNECTOR 163
CM

MALE REDUCING UNION 164
RUM

BULKHEAD UNION 164
BU

SHORT BULKHEAD UNION 164
SBU

MALE TO NPT BULKHEAD CONNECTOR 165
BCM

MALE PLUG 169
MP

MALE NUT 169
NM

MALE TO SEAL O-RING CONNECTOR 165
CMOB

MALE TO FEMALE NPT CONNECTOR 165
FC

TAPERED MALE NUT 169
TNM

SHORT MALE NUT 170
SNM

MALE TO LET-LOK UNION 166
UGL

MALE TO BULKHEAD LET-LOK UNION 166
BUL

MALE TO SHORT BULKHEAD LET-LOK UNION 166
SBUL

BULKHEAD TO TUBE UNION 167
Without shoulder
BHUT-W

SHORT BULKHEAD TO TUBE UNION 167
Without shoulder
SBHUT-W

SWIVEL CONNECTORS

FEMALE TO MALE UNION 170
UMF

FEMALE TO MALE NPT CONNECTOR 170
MCF

FEMALE TO FEMALE UNION 171
UFF

FEMALE TO FEMALE NPT CONNECTOR 171
FCF

FEMALE TO LET-LOK CONNECTOR 171
FHTL

CAPS, NUTS & PLUGS

COUPLING 167
CP

DOUBLE FEMALE UNION 168
DFU

FEMALE NUT 168
NF

FEMALE CAP 168
CF

GASKETS

GASKET 172
GA

RETAINED GASKET 172
GA-RT

HIGH FLOW CONNECTORS

LONG HIGH FLOW GLAND 173
HGL

HIGH FLOW MALE TO TUBE 173
HMT

HIGH FLOW FEMALE NUT 173
HNF

HIGH FLOW MALE NUT 173
HNM

ORDERING INFORMATION

V - GL - 1/2 - W - E

Type of Fitting Designator

Size Designator

1/8	6 mm
1/4	8 mm
3/8	10 mm
1/2	12 mm
3/4	18 mm
1	

Surface Level Designator

To indicate the desired level of polish, please add "E" or "H" to the part Number:

E - With Electropolish
H - Without Electropolish

End Designator

S - With Shoulder
W - Without Shoulder

Material Designator

P	- 316L/316L VOD (AOD)
V	- SS316L Var or Vim/Var[1]
LM	- Low Manganese
H	- Hastelloy
*NI	- Nickel
*SS	Stainless Steel

* For Gaskets only

[1] Per SEMI F20-0305

GL-W

LONG GLAND

Without shoulder

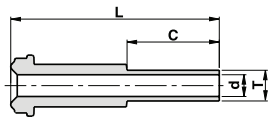

Ordering Information	Face Seal size	L		C		d		T Tube O.D	W.T.	
	inch	mm	inch	mm	inch	mm	inch	inch / mm	mm	inch
V-GL-1/8-W	1/8	36.1	1.42	19.1	0.75	1.9	0.07	1/8"	-	0.028
V-GL-1/4 X 1/8-W	1/4	36.1	1.42	19.1	0.75	1.9	0.07	1/8"	-	0.028
V-GL-1/4-W	1/4	43.2	1.70	19.1	0.75	4.6	0.18	1/4"	-	0.035
V-GL-3/8-W	1/2	45.5	1.79	19.1	0.75	7.7	0.30	3/8"	-	0.035
V-GL-1/2-W	1/2	45.5	1.79	19.1	0.75	10.2	0.40	1/2"	-	0.049
V-GL-1/2-W 1.41	1/2	35.8	1.41	9.6	0.38	10.2	0.40	1/2"	-	0.049
V-GL-1/2-W W.T.=0.065	1/2	45.5	1.79	19.1	0.75	9.5	0.37	1/2"	-	0.065
V-GL-1/2 X 1/4-W	1/2	45.5	1.79	19.1	0.75	4.6	0.18	1/4"	-	0.035
P-GL-3/4-W W.T.=0.049	3/4	51.6	2.03	19.1	0.75	16.6	0.65	3/4"	-	0.049
P-GL-3/4-W W.T.=0.065	3/4	51.6	2.03	19.1	0.75	15.8	0.62	3/4"	-	0.065
P-GL-1-W W.T.=0.065	1	58.9	2.32	19.1	0.75	22.1	0.87	1"	-	0.065
V-GL-6MM-W	1/4	43.2	1.70	19.1	0.75	4.0	0.16	6mm	1.00	-
V-GL-8MM-W	1/4	43.2	1.70	19.1	0.75	6.0	0.24	8mm	1.00	-
V-GL-10MM-W	1/2	45.5	1.79	19.1	0.75	8.0	0.31	10mm	1.00	-
V-GL-12MM-W	1/2	45.5	1.79	19.1	0.75	10.0	0.39	12mm	1.00	-
P-GL-18MM-W	3/4	51.6	2.03	19.1	0.75	15.0	0.59	18mm	1.50	-

GL-S

LONG GLAND

With shoulder

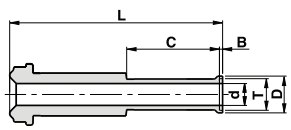

Ordering Information	Face Seal size	L		C		d		B		D		T Tube O.D	W.T.	
	inch	mm	inch	mm	inch	mm	inch	mm	inch	mm	inch	inch/mm	mm	inch
V-GL-1/4-S	1/4	43.7	1.72	19.1	0.75	4.6	0.18	0.6	0.02	7.4	0.29	1/4"	-	0.035
V-GL-3/8-S	1/2	46.2	1.82	19.1	0.75	7.7	0.30	0.8	0.03	10.4	0.41	3/8"	-	0.035
V-GL-1/2-S	1/2	46.5	1.83	19.1	0.75	10.2	0.40	1.0	0.04	14.0	0.55	1/2"	-	0.049
V-GL-1/2-S W.T.=0.065	1/2	46.5	1.83	19.1	0.75	9.5	0.37	1.0	0.04	14.0	0.55	1/2"	-	0.065
P-GL-3/4-S W.T.=0.049	3/4	52.6	2.07	19.1	0.75	16.6	0.65	1.0	0.04	20.3	0.80	3/4"	-	0.049
P-GL-3/4-S W.T.=0.065	3/4	52.6	2.07	19.1	0.75	15.8	0.62	1.0	0.04	20.3	0.80	3/4"	-	0.065
P-GL-1-S W.T.=0.065	1	65.3	2.57	19.1	0.75	22.1	0.87	1.0	0.04	26.9	1.06	1"	-	0.065
V-GL-6MM-S	1/4	43.7	1.72	19.1	0.75	4.0	0.16	0.5	0.02	7.0	0.27	6mm	1.00	-
V-GL-8MM-S	1/4	46.2	1.82	19.1	0.75	6.0	0.24	0.8	0.03	8.9	0.35	8mm	1.00	-
V-GL-10MM-S	1/2	46.2	1.82	19.1	0.75	8.0	0.31	0.8	0.03	10.9	0.43	10mm	1.00	-
V-GL-12MM-S	1/2	46.5	1.83	19.1	0.75	10.0	0.39	1.0	0.04	13.2	0.52	12mm	1.00	-
P-GL-18MM-S	3/4	52.6	2.07	19.1	0.75	15.0	0.59	1.0	0.04	19.3	0.76	18mm	1.50	-

Dimensions are for reference only, and are subject to change without notice.
When ordering, be sure to add the Surface-Finish Designator (either H or E) to the part Number. (See Material Table, page 145).

GM-W

MALE GLAND

Without shoulder

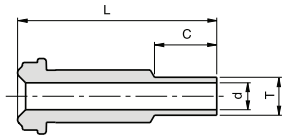

Ordering Information	Face Seal size	L		C		d		T Tube O.D
	inch	mm	inch	mm	inch	mm	inch	inch
V-GM-1/8-W	1/8	17.8	0.70	7.1	0.28	1.9	0.07	1/8
V-GM-1/4-W	1/4	33.3	1.31	10.4	0.41	3.0	0.12	1/4
V-GM-3/8-W	1/2	38.1	1.50	10.4	0.41	7.1	0.28	3/8
V-GM-1/2-W	1/2	38.1	1.50	12.7	0.50	10.2	0.40	1/2
P-GM-3/4-W	3/4	50.8	2.00	15.7	0.62	13.5	0.53	3/4
P-GM-1-W	1	56.4	2.22	20.6	0.81	19.1	0.75	1

GS-W

SHORT GLAND

Without shoulder

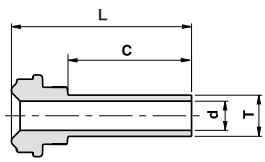

Ordering Information	Face Seal size	L		C		d		T Tube O.D	W.T.	
	inch	mm	inch	mm	inch	mm	inch	inch / mm	mm	inch
V-GS-1/8-W	1/8	27.4	1.08	19.1	0.75	1.9	0.07	1/8"	-	0.028
V-GS-1/4-W	1/4	27.9	1.10	19.1	0.75	4.6	0.18	1/4"	-	0.035
V-GS-1/4 X 1/8 -W	1/4	27.9	1.10	19.1	0.75	1.9	0.07	1/8"	-	0.028
V-GS -1/4-W 0.72	1/4	18.3	0.72	9.6	0.38	4.6	0.18	1/4"	-	0.035
V-GS-3/8-W	1/2	28.4	1.12	19.1	0.75	7.7	0.30	3/8"	-	0.035
V-GS-1/2-W	1/2	28.4	1.12	19.1	0.75	10.2	0.40	1/2"	-	0.049
V-GS-1/2-W W.T.=0.065	1/2	28.4	1.12	19.1	0.75	9.5	0.37	1/2"	-	0.065
V-GS-1/2-W-0.74	1/2	18.8	0.74	9.7	0.38	10.2	0.40	1/2"	-	0.049
V-GS-1/2 X 1/4-W	1/2	28.4	1.12	19.1	0.75	4.6	0.18	1/4"	-	0.035
P-GS-3/4-W W.T.=0.049	3/4	29.0	1.14	19.1	0.75	16.6	0.65	3/4"	-	0.049
P-GS-3/4-W W.T.=0.065	3/4	29.0	1.14	19.1	0.75	15.8	0.62	3/4"	-	0.065
P-GS-1-W W.T.=0.065	1	32.0	1.26	19.1	0.75	22.1	0.87	1"	-	0.065
V-GS-6MM-W	1/4	29.4	1.16	19.1	0.75	4.0	0.16	6mm	1.00	-
V-GS-8MM-W	1/4	29.5	1.16	19.1	0.75	6.0	0.24	8mm	1.00	-
V-GS-10MM-W	1/2	29.4	1.16	19.1	0.75	8.0	0.31	10mm	1.00	-
V-GS-12MM-W	1/2	29.4	1.16	19.1	0.75	10.0	0.39	12mm	1.00	-
P-GS-18MM-W	3/4	31.0	1.22	19.1	0.75	15.0	0.59	18mm	1.50	-

Dimensions are for reference only, and are subject to change without notice.
When ordering, be sure to add the Surface-Finish Designator (either H or E) to the part Number. (See Material Table, page 145).

GS-S

SHORT GLAND

With shoulder

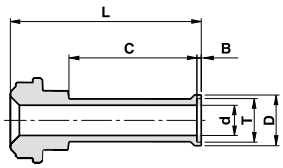

Ordering Information	Face Seal size	L		C		d		B		D		T Tube O.D	W.T.	
	inch	mm	inch	mm	inch	mm	inch	mm	inch	mm	inch	inch / mm	mm	inch
V-GS-1/4-S	1/4	28.5	1.12	19.1	0.75	4.6	0.18	0.6	0.02	7.4	0.29	1/4"	-	0.035
V-GS-3/8-S	1/2	29.2	1.15	19.1	0.75	7.7	0.30	0.8	0.03	10.4	0.41	3/8"	-	0.035
V-GS-1/2-S	1/2	29.4	1.16	19.1	0.75	10.2	0.40	1.0	0.04	14.0	0.55	1/2"	-	0.049
V-GS-1/2-S W.T.=0.065	1/2	29.4	1.16	19.1	0.75	9.5	0.37	1.0	0.04	14.0	0.55	1/2"	-	0.065
P-GS-3/4-S W.T.=0.049	3/4	30.0	1.18	19.1	0.75	16.6	0.65	1.0	0.04	20.3	0.80	3/4"	-	0.049
P-GS-3/4-S W.T.=0.065	3/4	30.0	1.18	19.1	0.75	15.8	0.62	1.0	0.04	20.3	0.80	3/4"	-	0.065
P-GS-1-S W.T.=0.065	1	32.1	1.26	19.1	0.75	22.1	0.87	1.0	0.04	26.9	1.06	1"	-	0.065
V-GS-6MM-S	1/4	30.0	1.18	19.1	0.75	4.0	0.16	0.5	0.02	7.0	0.27	6mm	1.00	-
V-GS-8MM-S	1/4	30.2	1.19	19.1	0.75	6.0	0.24	0.8	0.03	8.9	0.35	8mm	1.00	-
V-GS-10MM-S	1/2	31.0	1.22	19.1	0.75	8.0	0.31	0.8	0.03	10.9	0.43	10mm	1.00	-
V-GS-12MM-S	1/2	30.5	1.20	19.1	0.75	10.0	0.39	1.0	0.04	13.2	0.52	12mm	1.00	-
P-GS-18MM-S	3/4	31.0	1.22	19.1	0.75	15.0	0.59	1.0	0.04	19.3	0.76	18mm	1.50	-

MGS-W

MINI SHORT GLAND

Without shoulder

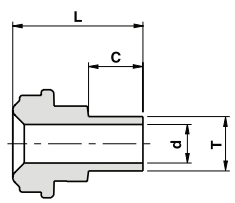

Ordering Information	Face Seal size	L		C		d		T Tube O.D	W.T.	
	inch	mm	inch	mm	inch	mm	inch	inch / mm	mm	inch
V-MGS-1/4-W	1/4	15.2	0.60	6.4	0.25	4.6	0.18	1/4"	-	0.035
V-MGS-3/8-W	1/2	15.8	0.62	6.4	0.25	7.7	0.30	3/8"	-	0.035
V-MGS-1/2-W	1/2	15.8	0.62	6.4	0.25	10.2	0.40	1/2"	-	0.049
V-MGS-1/2-W W.T.=0.065	1/2	15.8	0.62	6.4	0.25	9.5	0.37	1/2"	-	0.065
V-MGS-6MM-W	1/4	15.2	0.60	6.4	0.25	4.0	0.16	6mm	1.00	-
V-MGS-8MM-W	1/4	15.8	0.62	6.4	0.25	6.0	0.24	8mm	1.00	-
V-MGS-10MM-W	1/2	15.8	0.62	6.4	0.25	8.0	0.31	10mm	1.00	-
V-MGS-12MM-W	1/2	15.8	0.62	6.4	0.25	10.0	0.39	12mm	1.00	-

Dimensions are for reference only, and are subject to change without notice.
When ordering, be sure to add the Surface-Finish Designator (either H or E) to the part Number. (See Material Table, page 145).

MGS-S

MINI SHORT GLAND

With shoulder

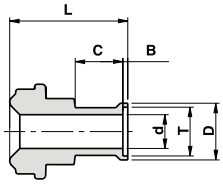

Ordering Information	Face Seal size	L		C		d		B		D		T Tube O.D	W.T.	
	inch	mm	inch	mm	inch	mm	inch	mm	inch	mm	inch	inch / mm	mm	inch
V-MGS-1/4-S	1/4	15.8	0.62	6.4	0.25	4.6	0.18	0.6	0.02	7.4	0.29	1/4"	-	0.035
V-MGS-3/8-S	1/2	16.5	0.65	6.4	0.25	7.7	0.30	0.8	0.03	10.4	0.41	3/8"	-	0.035
V-MGS-1/2-S	1/2	16.8	0.66	6.4	0.25	10.2	0.40	1.0	0.04	14.0	0.55	1/2"	-	0.049
V-MGS-1/2-S W.T.=0.065	1/2	16.8	0.66	6.4	0.25	9.5	0.37	1.0	0.04	14.0	0.55	1/2"	-	0.065
V-MGS-6MM-S	1/4	15.8	0.62	6.4	0.25	4.0	0.16	0.5	0.02	7.0	0.27	6mm	1.00	-
V-MGS-8MM-S	1/4	16.5	0.65	6.4	0.25	6.0	0.24	0.8	0.03	8.9	0.35	8mm	1.00	-
V-MGS-10MM-S	1/2	16.5	0.65	6.4	0.25	8.0	0.31	0.8	0.03	10.9	0.43	10mm	1.00	-
V-MGS-12MM-S	1/2	16.8	0.66	6.4	0.25	10.0	0.39	1.0	0.04	13.2	0.52	12mm	1.00	-

AG

GLAND ADAPTER TO LET-LOK

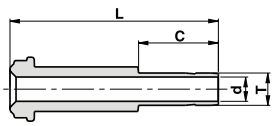

Ordering Information	Face Seal size	L		C		d		T Tube O.D
	inch	mm	inch	mm	inch	mm	inch	inch/mm
V-AG-1/4	1/4	41.2	1.62	15.9	0.62	4.3	0.17	1/4"
P-AG-3/8	1/2	46.0	1.81	17.5	0.69	6.8	0.27	3/8"
V-AG-1/2	1/2	49.3	1.94	24.4	0.96	9.4	0.37	1/2"
V-AG-6M	1/4	41.2	1.62	15.7	0.62	4.0	0.16	6mm

MG-W

MALE GLAND

Short tube without shoulder

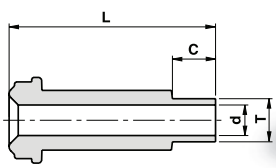

Ordering Information	Face Seal size	L		C		d		T Tube O.D	W.T.	
	inch	mm	inch	mm	inch	mm	inch	inch / mm	mm	inch
V-MG-1/4-W	1/4	30.5	1.20	6.4	0.25	4.6	0.18	1/4"	-	0.035
V-MG-1/4-W 1.32	1/4	33.5	1.32	9.6	0.38	4.6	0.18	1/4"	-	0.035
V-MG-3/8-W	1/2	32.8	1.29	6.4	0.25	7.7	0.30	3/8"	-	0.035
V-MG-1/2-W	1/2	32.8	1.29	6.4	0.25	10.2	0.40	1/2"	-	0.049
V-MG-6MM-W	1/4	30.5	1.20	6.4	0.25	4.0	0.16	6mm	1.00	-
V-MG-8MM-W	1/4	30.5	1.20	6.4	0.25	6.0	0.24	8mm	1.00	-
V-MG-10MM-W	1/2	32.8	1.29	6.4	0.25	8.0	0.31	10mm	1.00	-
V-MG-12MM-W	1/2	32.8	1.29	6.4	0.25	10.0	0.39	12mm	1.00	-

Dimensions are for reference only, and are subject to change without notice.
When ordering, be sure to add the Surface-Finish Designator (either H or E) to the part Number. (See Material Table, page 145).

GSW

SOCKET WELD GLAND

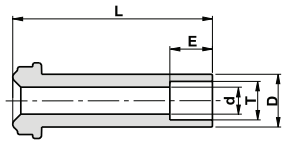

Ordering Information	Face Seal size	L		d		E		D		T Tube O.D
	inch	mm	inch	mm	inch	mm	inch	mm	inch	inch
V-GSW-1/8	1/8	17.8	0.70	2.4	0.09	2.5	0.10	5.1	0.20	1/8
V-GSW-1/4	1/4	33.3	1.31	4.6	0.18	7.1	0.28	8.9	0.35	1/4
V-GSW-1/4-W-0.75”	1/4	19.1	0.75	4.6	0.18	7.1	0.28	8.9	0.35	1/4
V-GSW-1/4-W-0.50”	1/4	12.7	0.50	4.6	0.18	7.1	0.28	8.9	0.35	1/4
V-GSW-3/8	1/2	38.1	1.50	7.1	0.28	7.9	0.31	15.2	0.60	3/8
V-GSW-1/2	1/2	38.1	1.50	10.2	0.40	9.6	0.38	15.2	0.60	1/2
P-GSW-3/4	3/4	50.8	2.00	15.7	0.62	11.2	0.44	22.4	0.88	3/4
P-GSW-1	1	56.4	2.22	22.1	0.87	15.7	0.62	30.2	1.19	1

ME-W

MINI ELBOW

Without shoulder

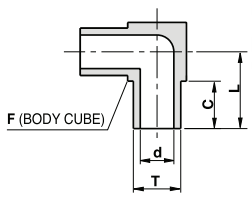

Ordering Information	L		C		d		F	T Tube O.D	W.T.	
	mm	inch	mm	inch	mm	inch	inch	inch / mm	mm	inch
V-ME-1/8-W	10.3	0.41	6.4	0.25	1.9	0.07	5/16	1/8''	-	0.028
V-ME-1/4-W	10.3	0.41	6.4	0.25	4.6	0.18	5/16	1/4''	-	0.035
V-ME-3/8-W	11.9	0.47	6.4	0.25	7.7	0.30	7/16	3/8''	-	0.035
V-ME-1/2-W	13.5	0.53	6.4	0.25	10.2	0.40	9/16	1/2''	-	0.049
V-ME-1/2-W W.T.=0.065	13.5	0.53	6.4	0.25	9.5	0.37	9/16	1/2''	-	0.065
V-ME-6MM-W	10.3	0.41	6.4	0.25	4.0	0.16	5/16	6mm	1.00	-
V-ME-8MM-W	11.9	0.47	6.4	0.25	6.0	0.24	7/16	8mm	1.00	-
V-ME-10MM-W	11.9	0.47	6.4	0.25	8.0	0.31	7/16	10mm	1.00	-
V-ME-12MM-W	13.5	0.53	6.4	0.25	10.0	0.39	9/16	12mm	1.00	-

Dimensions are for reference only, and are subject to change without notice.
When ordering, be sure to add the Surface-Finish Designator (either H or E) to the part Number. (See Material Table, page 145).

MER-W

MINI ELBOW REDUCER

Without shoulder

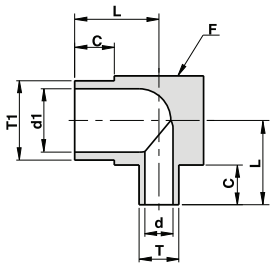

Ordering Information	L		C		d1		d		F	T1 Tube O.D	W.T. (T1)		T Tube O.D	W.T. (T)	
	mm	inch	mm	inch	mm	inch	mm	inch	inch	inch/mm	mm	inch	inch/mm	mm	inch
V-MER-1/4 X 1/8-W	10.3	0.41	6.4	0.25	4.6	0.18	1.9	0.07	5/16	1/4”	-	0.035	1/8”	-	0.028
V-MER-3/8 X 1/4-W	11.9	0.47	6.4	0.25	7.7	0.30	4.6	0.18	7/16	3/8”	-	0.035	1/4”	-	0.035
V-MER-1/2 X 1/4-W	13.5	0.53	6.4	0.25	10.2	0.40	4.6	0.18	9/16	1/2”	-	0.049	1/4”	-	0.035
V-MER-1/2 X 3/8-W	13.5	0.53	6.4	0.25	10.2	0.40	7.7	0.30	9/16	1/2”	-	0.049	3/8”	-	0.035
V-MER-8MM X 6MM-W	11.9	0.47	6.4	0.25	6.0	0.24	4.0	0.16	7/16	8mm	1.00	-	6mm	1.00	-
V-MER-12MM X 6MM-W	13.5	0.53	6.4	0.25	10.0	0.39	4.0	0.16	9/16	12mm	1.00	-	6mm	1.00	-
V-MER-12MM X 8MM-W	13.5	0.53	6.4	0.25	10.0	0.39	6.0	0.24	9/16	12mm	1.00	-	8mm	1.00	-

ME-45°-W

MINI ELBOW 45°

Without shoulder

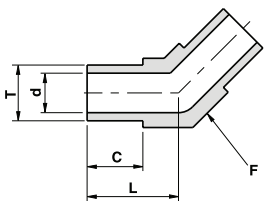

Ordering Information	L		C		d		F	T Tube O.D	W.T.	
	mm	inch	mm	inch	mm	inch	inch	inch / mm	mm	inch
V-ME-1/4-W-45DEG	10.3	0.41	6.4	0.25	4.6	0.18	5/16	1/4"	-	0.035
V-ME-3/8-W-45DEG	11.9	0.47	6.4	0.25	7.7	0.30	7/16	3/8"	-	0.035
V-ME-1/2-W-45DEG	13.5	0.53	6.4	0.25	10.2	0.40	9/16	1/2"	-	0.049
V-ME-1/2-W-45DEG W.T.=0.065	13.5	0.53	6.4	0.25	9.5	0.37	9/16	1/2"	-	0.065
V-ME-6MM-W-45DEG	10.3	0.41	6.4	0.25	4.0	0.16	5/16	6mm	1.00	-
V-ME-8MM-W-45DEG	11.9	0.47	6.4	0.25	6.0	0.24	7/16	8mm	1.00	-
V-ME-10MM-W-45DEG	11.9	0.47	6.4	0.25	8.0	0.31	7/16	10mm	1.00	-
V-ME-12MM-W-45DEG	13.5	0.53	6.4	0.25	10.0	0.39	9/16	12mm	1.00	-

Dimensions are for reference only, and are subject to change without notice.
When ordering, be sure to add the Surface-Finish Designator (either H or E) to the part Number. (See Material Table, page 145).

MEX-W

MINI ELBOW

With extended leg
Without shoulder

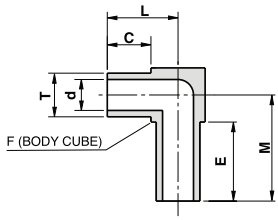

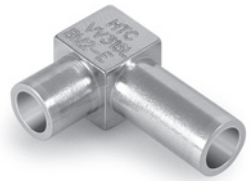

Ordering Information	L		C		M		E		d		F	T Tube O.D	W.T.
	mm	inch	mm	inch	mm	inch	mm	inch	mm	inch	inch	inch	inch
V-MEX-1/4-W 0.41X0.66	10.3	0.41	6.4	0.25	16.8	0.66	12.7	0.50	4.6	0.18	5/16	1/4	0.035
V-MEX-1/4-W 0.41X0.61	10.3	0.41	6.4	0.25	15.4	0.61	11.4	0.45	4.6	0.18	5/16	1/4	0.035
V-MEX-1/4-W 0.66X0.66”	16.8	0.66	12.7	0.50	16.8	0.66	12.7	0.50	4.6	0.18	5/16	1/4	0.035

MT-W

MINI TEE

Without shoulder

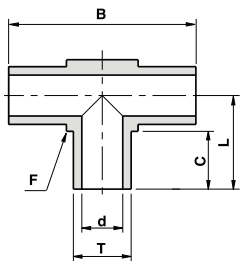

Ordering Information	L		B		C		d		F	T Tube O.D	W.T.	
	mm	inch	mm	inch	mm	inch	mm	inch	inch	inch / mm	mm	inch
V-MT-1/8-W	10.3	0.41	20.7	0.81	6.4	0.25	1.9	0.07	5/16	1/8"	-	0.028
V-MT-1/4-W	10.3	0.41	20.7	0.81	6.4	0.25	4.6	0.18	5/16	1/4"	-	0.035
V-MT-3/8-W	11.9	0.47	23.9	0.94	6.4	0.25	7.7	0.30	7/16	3/8"	-	0.035
V-MT-1/2-W	13.5	0.53	27.1	1.07	6.4	0.25	10.2	0.40	9/16	1/2"	-	0.049
V-MT-1/2-W W.T.=0.065	13.5	0.53	27.1	1.07	6.4	0.25	9.5	0.37	9/16	1/2"	-	0.065
V-MT-6MM-W	10.3	0.41	20.7	0.81	6.4	0.25	4.0	0.16	5/16	6mm	1.00	-
V-MT-8MM-W	11.9	0.47	23.9	0.94	6.4	0.25	6.0	0.24	7/16	8mm	1.00	-
V-MT-10MM-W	11.9	0.47	23.9	0.94	6.4	0.25	8.0	0.31	7/16	10mm	1.00	-
V-MT-12MM-W	13.5	0.53	27.1	1.07	6.4	0.25	10.0	0.39	9/16	12mm	1.00	-

Dimensions are for reference only, and are subject to change without notice.
When ordering, be sure to add the Surface-Finish Designator (either H or E) to the part Number. (See Material Table, page 145).

MTR-W

MINI TEE REDUCER

Without shoulder

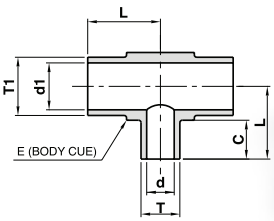

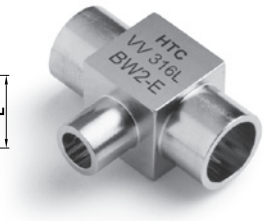

Ordering Information	L		B		C		d1		d		F	T1 Tube O.D	W.T. (T1)		T Tube O.D	W.T. (T)	
	mm	inch	mm	inch	mm	inch	mm	inch	mm	inch	inch	inch / mm	mm	inch	inch / mm	mm	inch
V-MTR-1/2 X 1/4-W	13.5	0.53	27.1	1.07	6.4	0.25	10.2	0.40	4.6	0.18	9/16	1/2”	-	0.049	1/4”	-	0.035
V-MTR-1/2 X 3/8-W	13.5	0.53	27.1	1.07	6.4	0.25	10.2	0.40	7.7	0.30	9/16	1/2”	-	0.049	3/8”	-	0.035
V-MTR-3/8 X 1/4-W	11.9	0.47	23.9	0.94	6.4	0.25	7.7	0.30	4.6	0.18	7/16	3/8”	-	0.035	1/4”	-	0.035
V-MTR-8MMX6MM-W	11.9	0.47	23.9	0.94	6.4	0.25	6.0	0.24	4.0	0.16	7/16	8mm	1.00	-	6mm	1.00	-
V-MTR-12MMX6MM-W	13.5	0.53	27.1	1.07	6.4	0.25	10.0	0.39	4.0	0.16	9/16	12mm	1.00	-	6mm	1.00	-
V-MTR-12MMX8MM -W	13.5	0.53	27.1	1.07	6.4	0.25	10.0	0.39	6.0	0.24	9/16	12mm	1.00	-	8mm	1.00	-

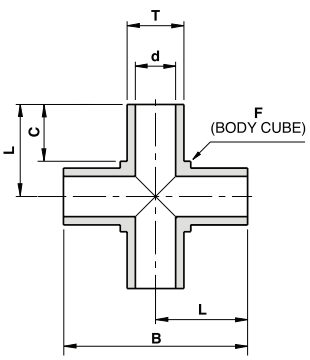

MC-W

MINI CROSS

Without shoulder

Ordering Information	L		B		C		d		F	T Tube O.D	W.T.	
	mm	inch	mm	inch	mm	inch	mm	inch	inch	inch / mm	mm	inch
V-MC-1/8-W	10.3	0.41	20.7	0.81	6.4	0.25	1.9	0.07	5/16	1/8"	-	0.028
V-MC-1/4-W	10.3	0.41	20.7	0.81	6.4	0.25	4.6	0.18	5/16	1/4"	-	0.035
V-MC-3/8-W	11.9	0.47	23.9	0.94	6.4	0.25	7.7	0.30	7/16	3/8"	-	0.035
V-MC-1/2-W	13.5	0.53	27.1	1.07	6.4	0.25	10.2	0.40	9/16	1/2"	-	0.049
V-MC-1/2-W W.T.=0.065	13.5	0.53	27.1	1.07	6.4	0.25	9.5	0.37	9/16	1/2"	-	0.065
V-MC-6MM-W	10.3	0.41	20.7	0.81	6.4	0.25	4.0	0.16	5/16	6mm	1.00	-
V-MC-8MM-W	11.9	0.47	23.9	0.94	6.4	0.25	6.0	0.24	7/16	8mm	1.00	-
V-MC-10MM-W	11.9	0.47	23.9	0.94	6.4	0.25	8.0	0.31	7/16	10mm	1.00	-
V-MC-12MM-W	13.5	0.53	27.1	1.07	6.4	0.25	10.0	0.39	9/16	12mm	1.00	-

Dimensions are for reference only, and are subject to change without notice.
When ordering, be sure to add the Surface-Finish Designator (either H or E) to the part Number. (See Material Table, page 145).

MTB-W

MINI TRI-EL

Without shoulder

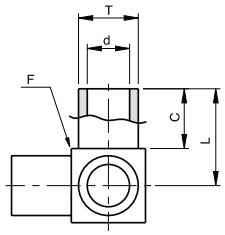

Ordering Information	L		C		d		F	T Tube O.D	W.T.	
	mm	inch	mm	inch	mm	inch	inch	inch / mm	mm	inch
V-MTB-1/8-W	10.3	0.41	6.4	0.25	1.9	0.07	5/16	1/8"	-	0.028
V-MTB-1/4-W	10.3	0.41	6.4	0.25	4.6	0.18	5/16	1/4"	-	0.035
V-MTB-3/8-W	11.9	0.47	6.4	0.25	7.7	0.30	7/16	3/8"	-	0.035
V-MTB-1/2-W	13.5	0.53	6.4	0.25	10.2	0.40	9/16	1/2"	-	0.049
V-MTB-6MM-W	10.3	0.41	6.4	0.25	4.0	0.16	5/16	6mm	1.00	-
V-MTB-8MM-W	11.9	0.47	6.4	0.25	6.0	0.24	7/16	8mm	1.00	-
V-MTB-10MM-W	11.9	0.47	6.4	0.25	8.0	0.31	7/16	10mm	1.00	-
V-MTB-12MM-W	13.5	0.53	6.4	0.25	10.0	0.39	9/16	12mm	1.00	-

RU-W

REDUCING UNION

Without shoulder

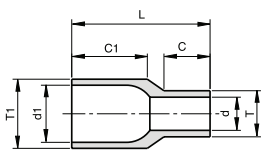

Ordering Information	L		C1		C		d1		d		T1 Tube O.D	W.T. (T1)		T Tube O.D	W.T. (T)	
	mm	inch	mm	inch	mm	inch	mm	inch	mm	inch	inch/ mm	mm	inch	inch/ mm	mm	inch
V-RU-1/4 X 1/8-W	19.1	0.75	10.4	0.41	6.4	0.25	4.6	0.18	1.9	0.07	1/4”	-	0.035	1/8”	-	0.028
V-RU-3/8 X 1/4-W	19.1	0.75	10.4	0.41	6.4	0.25	7.7	0.30	4.6	0.18	3/8”	-	0.035	1/4”	-	0.035
V-RU-1/2 X 1/4-W	19.1	0.75	10.4	0.41	6.4	0.25	10.2	0.40	4.6	0.18	1/2”	-	0.049	1/4”	-	0.035
V-RU-1/2 X 3/8-W	19.1	0.75	10.4	0.41	6.4	0.25	10.2	0.40	7.7	0.30	1/2”	-	0.049	3/8”	-	0.035
P-RU- 1 X 1/2-W	19.1	0.75	10.4	0.41	6.4	0.25	22.1	0.87	10.2	0.40	1”	-	0.065	1/2”	-	0.049
V-RU- 8MM X 6MM-W	19.1	0.75	10.4	0.41	6.4	0.25	6.0	0.24	4.0	0.16	8mm	1.00	-	6mm	1.00	-
V-RU- 10MM X 6MM-W	19.1	0.75	10.4	0.41	6.4	0.25	8.0	0.31	4.0	0.16	10mm	1.00	-	6mm	1.00	-
V-RU- 10MM X 8MM-W	19.1	0.75	10.4	0.41	6.4	0.25	8.0	0.31	6.0	0.24	10mm	1.00	-	8mm	1.00	-
V-RU- 12MM X 6MM-W	19.1	0.75	10.4	0.41	6.4	0.25	10.0	0.39	4.0	0.16	12mm	1.00	-	6mm	1.00	-
V-RU- 12MM X 8MM-W	19.1	0.75	10.4	0.41	6.4	0.25	10.0	0.39	6.0	0.24	12mm	1.00	-	8mm	1.00	-
V-RU- 12MM X 10MM-W	19.1	0.75	10.4	0.41	6.4	0.25	10.0	0.39	8.0	0.31	12mm	1.00	-	10mm	1.00	-

Dimensions are for reference only, and are subject to change without notice.
When ordering, be sure to add the Surface-Finish Designator (either H or E) to the part Number. (See Material Table, page 145).

EU

ELBOW UNION

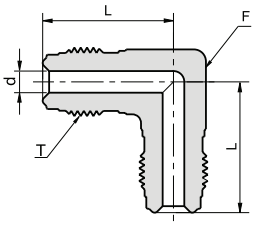

Ordering Information	Face Seal size	L		d		F	T Thread Size
	inch	mm	inch	mm	inch	inch	inch
P-EU-1/4	1/4	27.2	1.07	4.6	0.18	1/2	9/16-18
P-EU-1/2	1/2	36.8	1.45	10.2	0.40	13/16	7/8-14
P-EU-3/4	3/4	48.8	1.92	15.8	0.62	1 1/4	1 1/4 -18
P-EU-1	1	50.8	2.00	22.1	0.87	1 11/16	1 1/2 -20

TU

TEE UNION

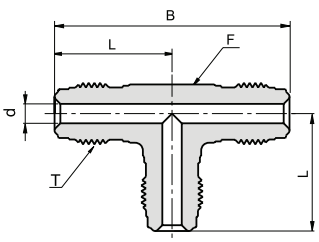

Ordering Information	Face Seal size	L		B		d		F	T Thread Size
	inch	mm	inch	mm	inch	mm	inch	inch	inch
P-TU-1/4	1/4	27.2	1.07	54.4	2.14	4.6	0.18	1/2	9/16-18
P-TU-1/2	1/2	36.8	1.45	73.6	2.90	10.2	0.40	13/16	7/8-14
P-TU-3/4	3/4	48.8	1.92	97.6	3.84	15.8	0.62	1 1/4	1 1/4 -18
P-TU-1	1	50.8	2.00	101.6	4.00	22.1	0.87	1 11/16	1 1/2 -20

Dimensions are for reference only, and are subject to change without notice.
When ordering, be sure to add the Surface-Finish Designator (either H or E) to the part Number. (See Material Table, page 145).

CU

CROSS UNION

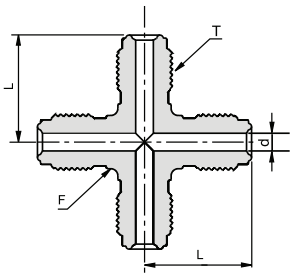

Ordering Information	Face SEal size	L		d		F	T Thread Size
	inch	mm	inch	mm	inch	inch	inch
P-CU-1/4	1/4	27.2	1.07	4.6	0.18	1/2	9/16-18
P-CU-1/2	1/2	36.8	1.45	10.2	0.40	13/16	7/8-14

EM

MALE ELBOW

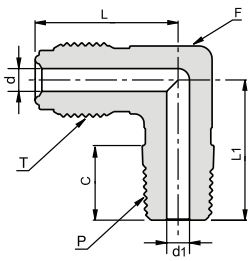

Ordering Information	Face Seal size	L		L1		C		d		d1		F	T Thread Size	P NPT-M
	inch	mm	inch	mm	inch	mm	inch	mm	inch	mm	inch	inch	inch	inch
P-EM-1/4 X 3/8	1/4	27.2	1.07	22.1	0.87	9.6	0.38	4.6	0.18	4.6	0.18	1/2	9/16-18	1/8
P-EM-1/4 X 1/4	1/4	27.2	1.07	26.7	1.05	14.2	0.56	4.6	0.18	4.6	0.18	1/2	9/16-18	1/4
P-EM-1/4 X 1/2	1/4	31.2	1.45	33.5	1.26	19.0	0.56	4.6	0.40	9.5	0.37	13/16	9/16-18	1/2
P-EM-1/2 X 1/4	1/2	36.8	1.23	32.0	1.32	14.2	0.75	10.2	0.18	4.6	0.40	13/16	7/8-14	1/4
P-EM-1/2 X 3/8	1/2	36.8	1.45	32.0	1.26	14.2	0.56	10.2	0.40	9.5	0.37	13/16	7/8-14	3/8
P-EM-1/2 X 1/2	1/2	36.8	1.45	36.8	1.45	19.0	0.75	10.2	0.40	10.2	0.40	13/16	7/8-14	1/2

Dimensions are for reference only, and are subject to change without notice.
When ordering, be sure to add the Surface-Finish Designator (either H or E) to the part Number. (See Material Table, page 145).

EW-W

ELBOW

Without shoulder

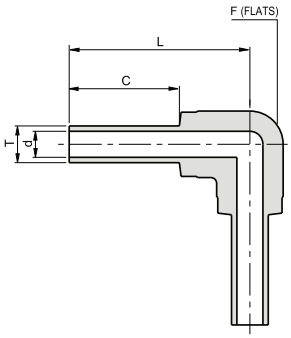

Ordering Information	L		C		d		F	T Tube O.D	W.T.	
	mm	inch	mm	inch	mm	inch	inch	inch/mm	mm	inch
P-EW-1/4-W	31.2	1.23	19.1	0.75	4.6	0.18	7/16	1/4"	-	0.035
P-EW-3/8-W	30.5	1.20	19.1	0.75	7.7	0.30	7/16	3/8"	-	0.035
P-EW-1/2-W	34.0	1.34	19.1	0.75	10.2	0.40	11/16	1/2"	-	0.049
P-EW-1/2-W W.T.=0.065	34.0	1.34	19.1	0.75	9.5	0.37	11/16	1/2"	-	0.049
P-EW-3/4-W W.T.=0.049	37.1	1.46	19.1	0.75	16.6	0.65	15/16	3/4"	-	0.065
P-EW-3/4-W W.T.=0.065	37.1	1.46	19.1	0.75	15.8	0.62	15/16	3/4"	-	0.065
P-EW-1-W W.T.=0.065	47.0	1.85	24.4	0.96	22.1	0.87	1 3/8	1''	-	0.065
P-EW-1-W W.T.=0.120	47.0	1.85	24.4	0.96	19.4	0.76	1 3/8	1''	-	0.120
P-EW-6M-W	31.2	1.23	19.1	0.75	4.0	0.16	7/16	6mm	1.00	-
P-EW-8MM-W	31.2	1.23	19.1	0.75	6.0	0.24	7/16	8mm	1.00	-
P-EW-10MM-W	34.0	1.34	19.1	0.75	8.0	0.31	11/16	10mm	1.00	-
P-EW-12MM-W	34.0	1.34	19.1	0.75	10.0	0.39	11/16	12mm	1.00	-

TW-W

TEE

Without shoulder

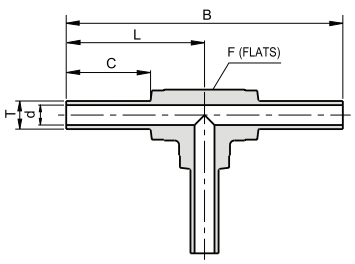

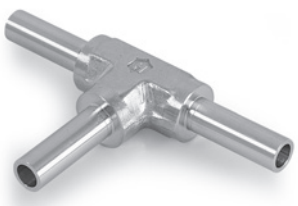

Ordering Information	L		B		C		d		F	T Tube O.D	W.T.	
	mm	inch	mm	inch	mm	inch	mm	inch	inch	inch/mm	mm	inch
P-TW-1/4-W	31.2	1.23	62.5	2.46	19.1	0.75	4.6	0.18	7/16	1/4"	-	0.035
P-TW-3/8-W	30.5	1.20	61.0	2.40	19.1	0.75	7.7	0.30	7/16	3/8"	-	0.035
P-TW-1/2-W	34.0	1.34	68.1	2.68	19.1	0.75	10.2	0.40	11/16	1/2"	-	0.049
P-TW-1/2-W W.T.=0.065	34.0	1.34	68.1	2.68	19.1	0.75	9.5	0.37	11/16	1/2"	-	0.065
P-TW-3/4-W W.T.=0.065	37.1	1.46	74.2	2.92	19.1	0.75	15.8	0.62	15/16	3/4"	-	0.065
P-TW-3/4-W W.T.=0.049	37.1	1.46	74.2	2.92	19.1	0.75	16.6	0.65	15/16	3/4"	-	0.065
P-TW-1-W W.T.=0.065	47.0	1.85	94.0	3.70	24.4	0.96	22.1	0.87	1 3/8	1''	-	0.065
P-TW-1-W W.T.=0.120	47.0	1.85	94.0	3.70	24.4	0.96	19.4	0.76	1 3/8	1''		0.120
P-TW-6MM-W	31.2	1.23	62.5	2.46	19.1	0.75	4.0	0.16	7/16	6mm	1.00	-
P-TW-8MM-W	31.2	1.23	62.5	2.46	19.1	0.75	6.0	0.24	7/16	8mm	1.00	-
P-TW-10MM-W	34.0	1.34	68.1	2.68	19.1	0.75	8.0	0.31	11/16	10mm	1.00	-
P-TW-12MM-W	34.0	1.34	68.1	2.68	19.1	0.75	10.0	0.39	11/16	12mm	1.00	-

Dimensions are for reference only, and are subject to change without notice.
When ordering, be sure to add the Surface-Finish Designator (either H or E) to the part Number. (See Material Table, page 145).

TWR-W

TEE REDUCER

Without shoulder

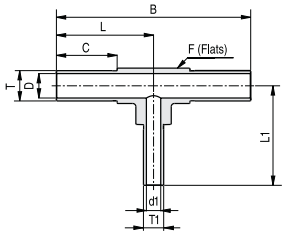

Ordering Information	L		L1		B		C		d		d1		F	T Tube O.D.	W.T. (T)	T1 Tube O.D.	W.T (T1)
	mm	inch	mm	inch	mm	inch	mm	inch	mm	inch	mm	inch	inch	inch/mm	inch/mm	inch/mm	inch/mm
P-TWR-3/8X1/4 W	30.5	1.20	31.2	1.23	61.0	2.40	19.1	0.75	7.7	0.30	4.6	0.18	7/16	3/8”	0.035”’	1/4”	0.035”’
P-TWR-1/2X1/4 W	34.0	1.34	34.0	1.34	68.0	2.68	19.1	0.75	10.2	0.40	4.6	0.18	11/16	1/2”	0.049”	1/4”	0.035”’
P-TWR-1/2X3/8 W	34.0	1.34	34.0	1.34	68.0	2.68	19.1	0.75	10.2	0.40	7.7	0.30	11/16	1/2”	0.049”	3/8”	0.035”’
P-TWR-3/4X1/4 W W.T= 0.049 X 0.035	37.1	1.46	37.1	1.46	74.2	2.92	19.1	0.75	16.6	0.65	4.6	0.18	15/16	3/4”	0.049”	1/4”	0.035”’
P-TWR-3/4X1/4 W W.T.=0.065 X 0.035	37.1	1.46	37.1	1.46	74.2	2.92	19.1	0.75	15.8	0.62	4.6	0.18	15/16	3/4”	0.065”	1/4”	0.035”’
P-TWR-3/4X1/2 W W.T.=0.049	37.1	1.46	37.1	1.46	74.2	2.92	19.1	0.75	16.6	0.65	10.2	0.40	15/16	3/4”	0.049”	1/2”	0.049”
P-TWR-12MMX6MM W	34.0	1.34	34.0	1.34	68.0	2.68	19.1	0.75	10.0	0.39	4.0	0.16	11/16	12mm	1.00mm	6mm	1.00mm

CW-W

CROSS

Without shoulder

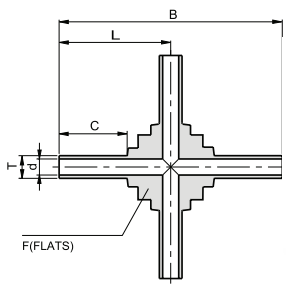

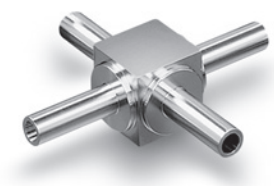

Ordering Information	L		B		C		d		F	T Tube O.D.	W.T.	
	mm	inch	mm	inch	mm	inch	mm	inch	inch/mm	inch/mm	mm	inch
P-CW-1/4-W	31.2	1.23	62.5	2.46	19.1	0.75	4.6	0.18	17mm	1/4"	-	0.035
P-CW-3/8-W	30.5	1.20	61.0	2.40	19.1	0.75	7.7	0.30	17mm	3/8"	-	0.035
P-CW-1/2-W	31.0	1.22	62.0	2.44	19.1	0.75	10.2	0.40	17mm	1/2"	-	0.049
P-CW-1/2-W W.T.=0.065	31.0	1.22	62.0	2.44	19.1	0.75	9.5	0.37	17mm	1/2"	-	0.065
P-CW-6MM-W	31.2	1.23	62.5	2.46	19.1	0.75	4.0	0.16	17mm	6mm	1.00	-
P-CW-8MM-W	30.5	1.20	61.0	2.40	19.1	0.75	6.0	0.24	17mm	8mm	1.00	-
P-CW-10MM-W	31.0	1.22	62.0	2.44	19.1	0.75	8.0	0.31	17mm	10mm	1.00	-
P-CW-12MM-W	31.0	1.22	62.0	2.44	19.1	0.75	10.0	0.39	17mm	12mm	1.00	-

Dimensions are for reference only, and are subject to change without notice.
When ordering, be sure to add the Surface-Finish Designator (either H or E) to the part Number. (See Material Table, page 145).

RW-W

REDUCER

Without shoulder

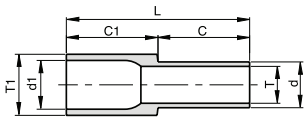

Ordering Information	L		C1		C		d1		d		T1 Tube O.D.	W.T. (T1)		T Tube O.D.	W.T. (T)	
	mm	inch	mm	inch	mm	inch	mm	inch	mm	inch	inch/ mm	mm	inch	inch/ mm	mm	inch
V-RW-1/4X1/8-W	38.1	1.50	19.1	0.75	19.1	0.75	4.6	0.18	1.9	0.07	1/4”	-	0.035	1/8”	-	0.028
V-RW-3/8X1/4-W	38.1	1.50	19.1	0.75	19.1	0.75	7.7	0.30	4.6	0.18	3/8”	-	0.035	1/4”	-	0.035
V-RW-1/2X1/4-W	38.1	1.50	19.1	0.75	19.1	0.75	10.2	0.40	4.6	0.18	1/2”	-	0.049	1/4”	-	0.035
V-RW-1/2X3/8-W	38.1	1.50	19.1	0.75	19.1	0.75	10.2	0.40	7.7	0.30	1/2”	-	0.049	3/8”	-	0.035
V-RW-3/4X1/2 W W.T.=0.049	38.5	1.51	19.1	0.75	19.1	0.75	16.6	0.65	10.2	0.40	3/4”	-	0.049	1/2”	-	0.049
P-RW-3/4X1/2 W W.T.=0.065X0.049	38.5	1.51	19.1	0.75	19.1	0.75	15.8	0.62	10.2	0.40	3/4”	-	0.065	1/2”	-	0.065
P-RW-3/4X1/4 W W.T.=0.049X0.035	38.5	1.51	19.1	0.75	19.1	0.75	16.6	0.65	4.6	0.18	3/4”	-	0.049	1/4”	-	0.049
P-RW-1X1/2 W W.T.= 0.065X0.049	40.5	1.59	19.1	0.75	19.1	0.75	22.1	0.87	10.2	0.40	1”	-	0.065	1/2”	-	0.049
V-RW-8MM X 6MM-W	38.1	1.50	19.1	0.75	19.1	0.75	6.0	0.24	4.0	0.16	8mm	1.00	-	6mm	1.00	-
V-RW-10MM X 6MM-W	38.1	1.50	19.1	0.75	19.1	0.75	8.0	0.31	4.0	0.16	10mm	1.00	-	6mm	1.00	-
V-RW-10MM X 8MM-W	38.1	1.50	19.1	0.75	19.1	0.75	8.0	0.31	6.0	0.24	10mm	1.00	-	8mm	1.00	-
V-RW-12MM X 6MM-W	38.1	1.50	19.1	0.75	19.1	0.75	10.0	0.39	4.0	0.16	12mm	1.00	-	6mm	1.00	-
V-RW-12MM X 8MM-W	38.1	1.50	19.1	0.75	19.1	0.75	10.0	0.39	6.0	0.24	12mm	1.00	-	8mm	1.00	-
V-RW-12MM X 10MM-W	38.1	1.50	19.1	0.75	19.1	0.75	10.0	0.39	8.0	0.31	12mm	1.00	-	10mm	1.00	-

UB-W

BUTTWELD UNION

Without shoulder

Ordering Information	L		d		T Tube O.D	W.T.
	mm	inch	mm	inch	inch	inch
V-UB-1/4-W	24.3	0.96	4.6	0.18	1/4	0.035
V-UB-3/8-W	23.9	0.94	7.7	0.30	3/8	0.035
V-UB-1/2-W	23.4	0.92	10.2	0.40	1/2	0.049
P-UB-3/4-W W.T.=0.049	23.4	0.92	16.6	0.65	3/4	0.049
P-UB-3/4-W W.T.=0 .065	23.4	0.92	15.8	0.62	3/4	0.065
P-UB-1-W W.T.=0 .065	29.7	1.17	22.1	0.87	1	0.065

Dimensions are for reference only, and are subject to change without notice.
When ordering, be sure to add the Surface-Finish Designator (either H or E) to the part Number. (See Material Table, page 145).

UB-S

BUTTWELD UNION

With shoulder

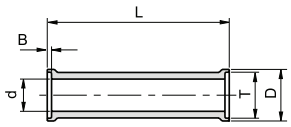

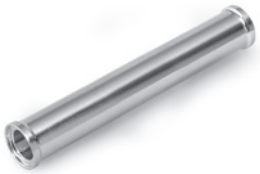

Ordering Information	L		d		B		D		T Tube O.D.	W.T.
	mm	inch	mm	inch	mm	inch	mm	inch	inch	inch
V-UB-1/4-S	25.4	1.00	4.6	0.18	0.55	0.02	7.4	0.29	1/4	0.035
V-UB-3/8-S	25.4	1.00	7.7	0.30	0.76	0.03	10.4	0.41	3/8	0.035
V-UB-1/2-S	25.4	1.00	10.2	0.40	1.00	0.04	14.0	0.55	1/2	0.049
P-UB-3/4-S W.T.=0 .049	25.4	1.00	16.5	0.65	1.00	0.04	20.3	0.80	3/4	0.049
P-UB-3/4-S W.T.=0 .065	25.4	1.00	15.8	0.62	1.00	0.04	20.3	0.80	3/4	0.065
P-UB-1-S W.T.=0 .065	31.8	1.25	22.1	0.87	1.00	0.04	26.9	1.06	1	0.065

UBL-S

BUTTWELD UNION

With locator and shoulder

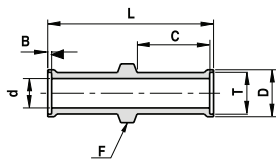

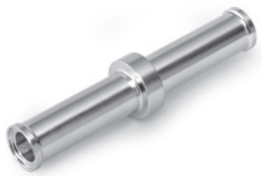

Ordering Information	L		C		d		B		D		F		T Tube O.D.	W.T.
	mm	inch	mm	inch	mm	inch	mm	inch	mm	inch	mm	inch	inch	inch
V-UBL-1/4-S	42.9	1.69	19.1	0.75	4.6	0.18	0.6	0.02	7.4	0.29	9.1	0.36	1/4	0.035
V-UBL-3/8-S	43.4	1.71	19.1	0.75	7.7	0.30	0.8	0.03	10.4	0.41	10.7	0.42	3/8	0.035
V-UBL-1/2-S	43.9	1.73	19.1	0.75	10.2	0.40	1.0	0.04	14.0	0.55	15.2	0.60	1/2	0.049

Dimensions are for reference only, and are subject to change without notice.
When ordering, be sure to add the Surface-Finish Designator (either H or E) to the part Number. (See Material Table, page 145).

UM

MALE UNION

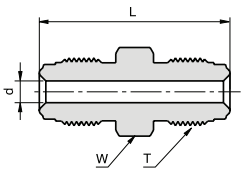

Ordering Information	Face Seal size	L		d		W	T Thread size
	inch	mm	inch	mm	inch	inch	inch
P-UM 1/4	1/4	39.4	1.55	4.6	0.18	5/8	9/16 - 18
P-UM 1/2	1/2	46.7	1.84	10.2	0.40	15/16	7/8 - 14
P-UM 3/4	3/4	62.0	2.44	15.8	0.62	1 5/16	1 1/4 - 18
P-UM 1	1	65.8	2.59	22.2	0.87	1 5/8	1 1/2 - 20

CM

MALE TO MALE NPT CONNECTOR

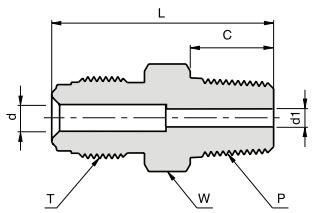

Ordering Information	Face Seal size	L		C		d		d1		W	T Thread size	P NPT-M
	inch	mm	inch	mm	inch	mm	inch	mm	inch	inch	inch	inch
P-CM-1/4 X 1/8	1/4	33.3	1.31	9.6	0.38	4.6	0.18	4.6	0.18	5/8	9/16 - 18	1/8
P-CM-1/4 X 1/4	1/4	37.8	1.49	14.2	0.56	4.6	0.18	4.6	0.18	5/8	9/16 - 18	1/4
P-CM-1/4 X R1/4 BSPT	1/4	37.8	1.49	14.2	0.56	4.6	0.18	4.6	0.18	5/8	9/16 - 18	1/4 BSPT
P-CM-1/2 X 1/4	1/2	41.9	1.65	14.2	0.56	10.2	0.40	7.1	0.28	15/16	7/8 - 14	1/4
P-CM-1/2 X3/8	1/2	41.9	1.65	14.2	0.56	9.6	0.38	9.6	0.38	15/16	7/8 - 14	3/8
P-CM-1/2 X 1/2	1/2	46.7	1.84	19.0	0.75	10.2	0.40	10.2	0.40	15/16	7/8 - 14	1/2
P-CM-3/4 X 3/4	3/4	55.6	2.19	19.0	0.75	15.8	0.62	15.8	0.62	1 5/16	1 1/4 - 18	3/4
P-CM-1 X 1	1	62.7	2.47	23.9	0.94	22.2	0.87	22.2	0.87	1 5/8	1 1/2 - 20	1

Dimensions are for reference only, and are subject to change without notice.
When ordering, be sure to add the Surface-Finish Designator (either H or E) to the part Number. (See Material Table, page 145).

RUM

MALE REDUCING UNION

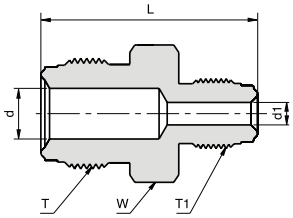

Ordering Information	Face Seal size	Face Seal Size1	L		d		d1		W	T Thread size	T1 Thread size
	inch	inch	mm	inch	mm	inch	mm	inch	inch	inch	inch
P-RUM 1/4 X 1/8	1/4	1/8	34.8	1.37	4.6	0.18	2.4	0.09	5/8	9/16-18	5/16-24
P-RUM 1/2 X 1/4	1/2	1/4	43.4	1.71	10.2	0.40	4.6	0.18	15/16	7/8-1/4	9/16 -18

BU

BULKHEAD UNION

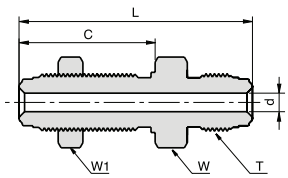

Ordering Information	Face Seal size	L		C		d		W	W1	T Thread size	Panel hole drill size
	inch	mm	inch	mm	inch	mm	inch	inch	inch	inch	inch
P-BU 1/4	1/4	56.6	2.23	33.0	1.30	4.6	0.18	3/4	3/4	9/16 -18	19/32
P-BU 1/2	1/2	65.3	2.57	37.6	1.48	10.2	0.40	1 1/16	1 1/16	7/8 -14	29/32

SBU

SHORT BULKHEAD UNION

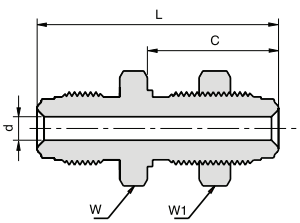

Ordering Information	Face Seal size	L		C		d		W	W1	T Thread size	Panel hole drill size
	inch	inch	mm	inch	mm	inch	mm	inch	inch	inch	inch
P-SBU 1/4	1/4	46.2	1.82	25.1	0.99	4.6	0.18	3/4	3/4	9/16-18	19/32
P-SBU 1/2	1/2	54.4	2.14	28.2	1.11	10.2	0.40	1 1/16	1 1/16	7/8-14	29/32

Dimensions are for reference only, and are subject to change without notice.
When ordering, be sure to add the Surface-Finish Designator (either H or E) to the part Number. (See Material Table, page 145).

BCM

MALE TO NPT BULKHEAD CONNECTOR

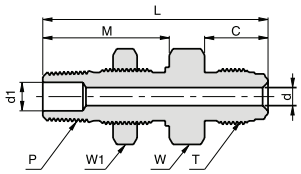

Ordering Information	Face Seal size	L		C		d		M		d1		W	W1	T Thread size	P NPT-M	Panel hole drill size
	inch	mm	inch	mm	inch	mm	inch	mm	inch	mm	inch	inch	inch	inch	inch	inch
P-BCM 1/4 X 1/4	1/4	56.1	2.21	15.8	0.62	4.6	0.18	31.5	1.24	7.1	0.28	13/16	13/16	9/16 -18	1/4	19/32
P-BCM 1/2 X 1/4	1/2	59.4	2.34	17.8	0.70	10.2	0.40	31.5	1.24	7.1	0.28	15/16	13/16	7/8 -14	1/4	19/32

CMOB

MALE TO SEAL O-RING CONNECTOR

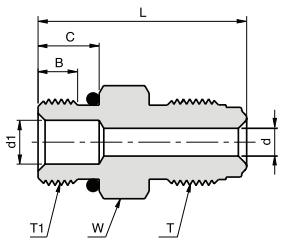

Ordering Information	Face Seal size	L		C		B		d		d1		W	T Thread size	T1 Thread size	O-Ring size
	inch	mm	inch	mm	inch	mm	inch	mm	inch	mm	inch	inch	inch	inch	
P-CMOB 1/4 X 9/16	1/4	33.8	1.33	9.9	0.39	6.4	0.25	4.6	0.18	7.1	0.28	3/4	9/16 -18	9/16 -18	3-906
P-CMOB 1/2 X 7/8	1/2	42.2	1.66	12.7	0.50	10.2	0.40	7.1	0.28	15.0	0.59	1	7/8 -14	7/8 -14	3-910
P-CMOB 1/2 X 9/16	1/2	37.6	1.48	9.9	0.39	6.4	0.25	7.1	0.28	7.1	0.28	15/16	7/8 -14	9/16 -18	3-906

FC

MALE TO FEMALE NPT CONNECTOR

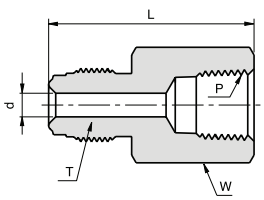

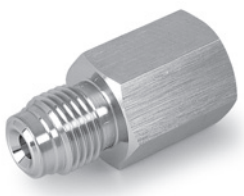

Ordering Information	Face Seal size	L		d		W	T Thread size	P NPT-F
	inch	mm	inch	mm	inch	inch	inch	inch
P-FC 1/4 X 1/8	1/4	35.8	1.41	4.6	0.18	5/8	9/16 -18	1/8
P-FC 1/4 X 1/4	1/4	39.1	1.54	4.6	0.18	3/4	9/16 -18	1/4
P-FC 1/2 X 1/4	1/2	39.1	1.54	10.2	0.40	15/16	7/8 -14	1/4
P-FC 1/2 X 3/8	1/2	44.7	1.76	10.2	0.40	15/16	7/8 -14	3/8
P-FC 1/2 X 1/2	1/2	50.5	1.99	10.2	0.40	1 1/16	7/8 -14	1/2
P-FC 3/4 X 3/4	3/4	59.9	2.36	15.8	0.62	1 5/16	1 1/4 -18	3/4
P-FC 1 X 1	1	63.8	2.51	22.1	0.87	1 5/8	1 1/2 -20	1

Dimensions are for reference only, and are subject to change without notice.
When ordering, be sure to add the Surface-Finish Designator (either H or E) to the part Number. (See Material Table, page 145).

UGL

MALE TO LET-LOK UNION

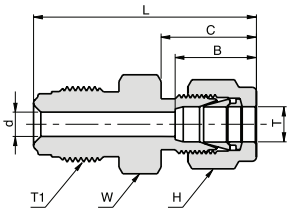

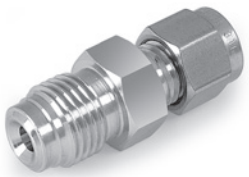

Ordering Information	Face SEal size	L		C		B		d		W	H	T Tube O.D.	T1 Thread size
	inch	mm	inch	mm	inch	mm	inch	mm	inch	inch	inch	inch	inch
P-UGL 1/4 X 1/8	1/4	38.9	1.53	15.2	0.60	12.7	0.50	4.6	0.18	5/8	7/16	1/8	9/16 - 18
P-UGL 1/4 X 1/4	1/4	41.1	1.62	17.8	0.70	15.2	0.60	4.6	0.18	5/8	9/16	1/4	9/16 - 18
P-UGL 1/4 X 3/8	1/4	42.1	1.66	19.4	0.76	16.8	0.66	4.6	0.18	5/8	11/16	3/8	9/16 - 18
P-UGL 1/2 X 3/8	1/2	46.7	1.84	19.4	0.76	16.8	0.66	7.1	0.28	15/16	11/16	3/8	7/8 - 14
P-UGL 1/2 X 1/2	1/2	49.5	1.95	21.8	0.86	22.9	0.90	10.2	0.40	15/16	7/8	1/2	7/8 - 14

BUL

MALE TO BULKHEAD LET-LOK UNION

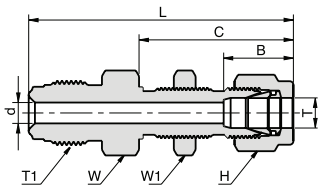

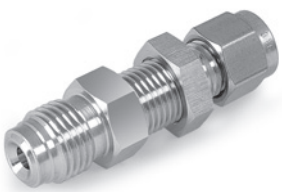

Ordering Information	Face Seal size	L		C		B		d		W	W1	H	T Tube O.D.	T1 Thread size	Panel hole drill size
	inch	mm	inch	mm	inch	mm	inch	mm	inch	inch	inch	inch	inch	inch	inch
P-BUL 1/4 X 1/4	1/4	57.2	2.25	33.5	1.32	15.2	0.60	4.6	0.18	5/8	5/8	9/16	1/4	9/16 - 18	29/64
P-BUL 1/2 X 3/8	1/4	64.5	2.54	36.8	1.45	16.8	0.66	7.1	0.28	15/16	3/4	11/16	3/8	7/8 - 14	37/64
P-BUL 1/2 X 1/2	1/2	69.9	2.74	19.4	1.65	22.9	0.90	10.2	0.40	15/16	15/16	7/8	1/2	7/8 - 14	49/64

SBUL

MALE TO SHORT BULKHEAD LET-LOK UNION

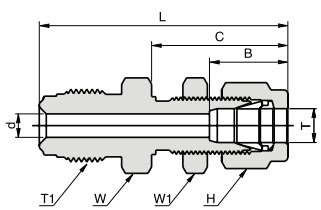

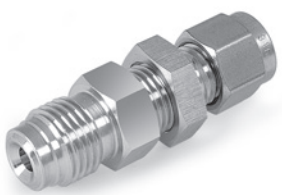

Ordering Information	Face Seal size	L		C		B		d		W	W1	H	T Tube O.D.	T1 Thread size	Panel hole drill size
	inch	mm	inch	mm	inch	mm	inch	mm	inch	inch	inch	inch	inch	inch	inch
P-SBUL 1/4 X 1/4	1/4	47.8	1.88	26.7	1.05	15.2	0.60	4.6	0.18	5/8	5/8	9/16	1/4	9/16-18	29/64

Dimensions are for reference only, and are subject to change without notice.
When ordering, be sure to add the Surface-Finish Designator (either H or E) to the part Number. (See Material Table, page 145).

BHUT-W

BULKHEAD TO TUBE UNION

Without shoulder

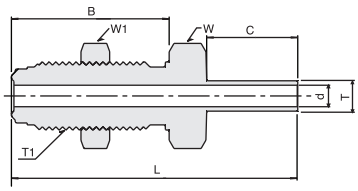

Ordering Information	Face Seal size	L		B		C		d		W	W1	T Tube O.D.	T1 Thread size	Panel hole drill size
	inch	mm	inch	mm	inch	mm	inch	mm	inch	inch	inch	inch	inch	inch
P-BHUT- 1/4 X 1/4-W	1/4	59.9	2.36	33.0	1.30	19.1	0.75	4.6	0.18	3/4	3/4	1/4	9/16 - 18	19/32
P-BHUT- 1/2 X 1/2-W	1/2	66.6	2.62	37.6	1.48	19.1	0.75	10.2	0.40	1 1/16	1 1/16	1/2	7/8 - 14	29/32

SBHUT-W

SHORT BULKHEAD TO TUBE UNION

Without shoulder

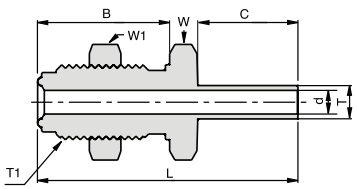

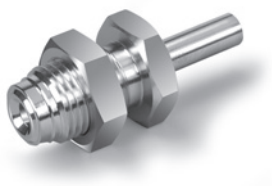

Ordering Information	Face Seal size	L		B		C		d		W	W1	T Tube O.D.	T1 Thread size	Panel hole drill size
	inch	mm	inch	mm	inch	mm	inch	mm	inch	inch	inch	inch	inch	inch
P-SBHUT- 1/4 X 1/4-W	1/4	49.5	1.95	25.1	0.99	19.1	0.75	4.6	0.18	3/4	3/4	1/4	9/16 - 18	19/32
P-SBHUT- 1/2 X 1/2-W	1/2	58.7	2.31	29.7	1.17	19.1	0.75	10.2	0.40	1 1/16	1 1/16	1/2	7/8 - 14	29/32

CP

COUPLING

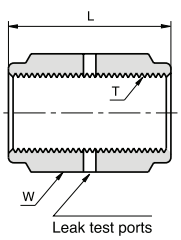

Ordering Information	Face Seal size	L		W	T Thread size
	inch	mm	inch	inch	inch
P-CP 1/4	1/4	30.2	1.19	3/4	9/16 -18
P-CP 1/2	1/2	33.3	1.31	1 1/16	7/8 -14
P-CP 3/4	3/4	42.7	1.68	1 1/2	1 1/4 -18
P-CP 1	1	51.8	2.04	1 3/4	1 1/2 -20

Dimensions are for reference only, and are subject to change without notice.
When ordering, be sure to add the Surface-Finish Designator (either H or E) to the part Number. (See Material Table, page 145).

DFU

DOUBLE FEMALE UNION

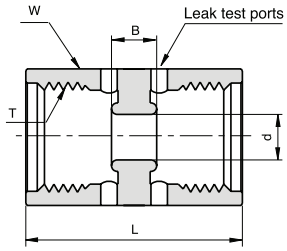

Ordering Information	Face Seal size	L		B		d		W	T Thread size
	inch	mm	inch	mm	inch	mm	inch	inch	inch
P-DFU-1/4	1/4	30.2	1.19	6.0	0.24	6.4	0.25	3/4	9/16 - 18
P-DFU-1/2	1/2	33.3	1.31	6.0	0.24	14.0	0.55	1 1/16	7/8 - 14

Caution: This fitting should be used with a swivel male connector only.

NF

FEMALE NUT

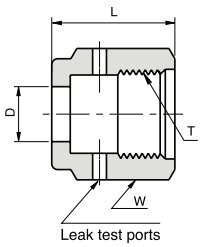

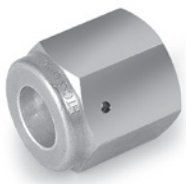

Ordering Information	Face Seal size	L		D		W	T Thread size
	inch	mm	inch	mm	inch	inch	inch
P-NF 1/8	1/8	13.6	0.54	5.3	0.21	7/16	5/16-24
P-NF 1/4	1/4	20.6	0.81	9.2	0.36	3/4	9/16-18
P-NF 1/2	1/2	22.5	0.88	15.5	0.61	1 1/16	7/8-14
P-NF 3/4	3/4	28.5	1.12	22.6	0.89	1 1/2	1 1/4-18
P-NF 1	1	34.0	1.34	30.6	1.20	1 3/4	1 1/2-20

CF

FEMALE CAP

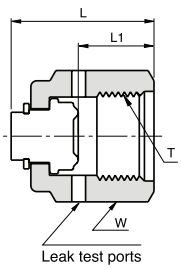

Ordering Information	Face Seal size	L		L1		W	T Thread size
	inch	mm	inch	mm	inch	inch	inch
PCF1/8	1/8	16.6	0.65	8.4	0.33	7/16	5/16-24
P-CF 1/4	1/4	23.9	0.94	12.7	0.50	3/4	9/16-18
P-CF 1/2	1/2	25.6	1.01	14.2	0.56	1 1/16	7/8-14
P-CF 3/4	3/4	32.3	1.27	19.1	0.75	1 1/2	1 1/4-18
P-CF 1	1	39.0	1.53	23.4	0.92	1 3/4	1 1/2-20

Dimensions are for reference only, and are subject to change without notice.
When ordering, be sure to add the Surface-Finish Designator (either H or E) to the part Number. (See Material Table, page 145).

MP

MALE PLUG

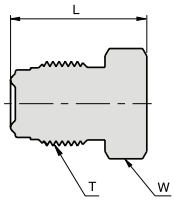

Ordering Information	Face Seal size	L		W	T Thread size
	inch	mm	inch	inch	inch
P-MP 1/8	1/8	17.3	0.68	3/8	5/16 - 24
P-MP 1/4	1/8	23.4	0.92	5/8	9/16 -18
P-MP 1/2	1/2	27.4	1.08	15/16	7/8 -14
P-MP 3/4	3/4	36.3	1.43	1 5/16	1 1/4 -18
P-MP 1	1	38.6	1.52	1 5/8	1 1/2 - 20

NM

MALE NUT

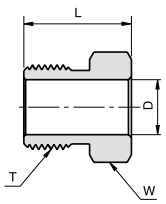

Ordering Information	Face Seal size	L		D		W	T Thread size
	inch	mm	inch	mm	inch	inch	inch
P-NM 1/8	1/8	12.7	0.50	5.3	0.21	3/8	5/16-24
P-NM 1/4	1/4	18.0	0.71	9.2	0.36	5/8	9/16-18
P-NM 1/2	1/2	20.6	0.81	15.5	0.61	15/16	7/8-14
P-NM 3/4	3/4	25.4	1.00	22.7	0.89	1 5/16	1 1/4-18
P-NM 1	1	30.2	1.19	30.5	1.20	1 5/8	1 1/2-20

TNM

TAPERED MALE NUT

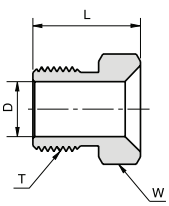

Ordering Information	Face Seal size	L		D		W	T Thread size
	inch	mm	inch	mm	inch	inch	inch
P-NM 1/4	1/4	18.0	0.71	9.2	0.36	5/8	9/16-18

Dimensions are for reference only, and are subject to change without notice.
When ordering, be sure to add the Surface-Finish Designator (either H or E) to the part Number. (See Material Table, page 145).

SNM

SHORT MALE NUT

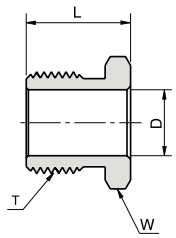

Ordering Information	Face Seal size	L		D		W	T Thread size
	inch	mm	inch	mm	inch	inch	inch
P-SNM 1/4 .54	1/4	13.7	0.54	9.2	0.36	5/8	9/16-18
P-SNM 1/4 .65	1/4	16.5	0.65	9.2	0.36	5/8	9/16-18

UMF

FEMALE TO MALE UNION

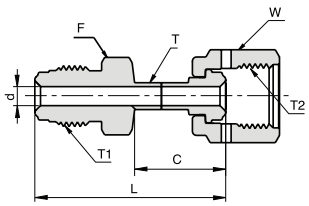

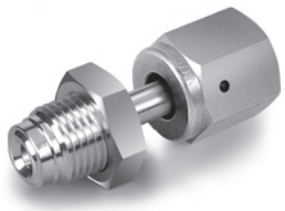

Ordering Information	Face Seal size	L		C		d		F	W	T Tube O.D.	T1 Thread size	T2 Thread size
	inch	mm	inch	mm	inch	mm	inch	inch	inch	inch	inch	inch
P-UMF-1/4 X 1/4	1/4	45.2	1.78	21.6	0.85	4.6	0.18	5/8	3/4	1/4	9/16 - 18	9/16 - 18
P-UMF-1/2 X 1/2	1/2	49.8	1.96	22.1	0.87	10.2	0.40	15/16	1-1/16	1/2	7/8 - 14	7/8 - 14

MCF

FEMALE TO MALE NPT CONNECTOR

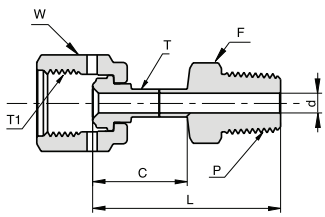

Ordering Information	Face Seal size	L		C		d		F	W	T Tube O.D.	T1 Thread size	P NPT-M
	inch	mm	inch	mm	inch	mm	inch	inch	inch	inch	inch	inch
P-MCF-1/4 X 1/4	1/4	45.5	1.79	23.4	0.92	4.6	0.18	9/16	3/4	1/4	9/16 - 18	1/4
P-MCF-1/2 X 1/2	1/2	53.1	2.09	25.6	1.01	10.2	0.40	7/8	1 1/16	1/2	7/8 - 14	1/2

Dimensions are for reference only, and are subject to change without notice.
When ordering, be sure to add the Surface-Finish Designator (either H or E) to the part Number. (See Material Table, page 145).

UFF

FEMALE TO FEMALE UNION

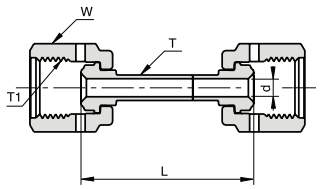

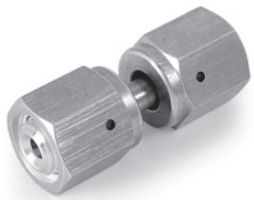

Ordering Information	Face Seal size	L		d		W	T Tube O.D.	T1 Thread size
	inch	mm	inch	mm	inch	inch	inch	inch
P-UFF-1/4 X 1/4	1/4	43.0	1.69	4.6	0.18	3/4	1/4	9/16 - 18
P-UFF-1/2 X 1/2	1/2	44.1	1.73	10.2	0.40	1 1/16	1/2	7/8 - 14

FCF

FEMALE TO FEMALE NPT CONNECTOR

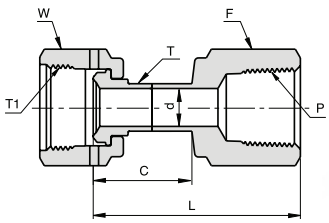

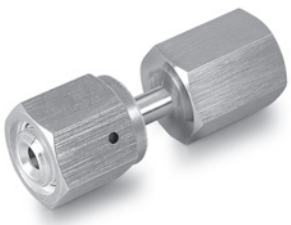

Ordering Information	Face Seal size	L		C		d		F	W	T Tube O.d.	T Thread size	P NPT-F
	inch	mm	inch	mm	inch	mm	inch	inch	inch	inch	inch	inch
P-FCF-1/4 X 1/4	1/4	45.0	1.77	23.4	0.92	4.6	0.18	3/4	3/4	1/4	9/16 - 18	1/4
P-FCF-1/2 X 1/2	1/2	54.8	2.16	26.4	1.04	10.2	0.40	1 1/16	1 1/16	1/2	7/8 - 14	1/2

FHTL

FEMALE TO LET-LOK CONNECTOR

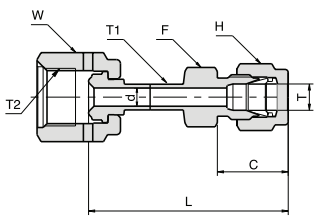

Ordering Information	Face Seal size	L		C		d		F	W	H	T Tube O.D.	T1 Tube O.D.	T2 Thread size
	inch	mm	inch	mm	inch	mm	inch	inch	inch	inch	inch	inch	inch
P-FHTL-1/4 X 1/4	1/4	49.3	1.94	17.8	0.70	4.6	0.18	1/2	3/4	9/16	1/4	1/4	9/16 - 18
P-FHTL-1/2 X 1/2	1/2	56.6	2.23	21.8	0.86	10.2	0.40	13/16	1 1/16	7/8	1/2	1/2	7/8 - 14

Dimensions are for reference only, and are subject to change without notice.
When ordering, be sure to add the Surface-Finish Designator (either H or E) to the part Number. (See Material Table, page 145).

GA

GASKET

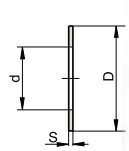

UNPLATED GASKETS

Ordering Information	Face Seal size	D		d		S	
	inch	mm	inch	mm	inch	mm	inch
GA-1/4 - E	1/4	11.9	0.47	5.6	0.22	0.7	0.028
GA-1/2 - E	1/2	19.8	0.78	11.2	0.44	0.7	0.028

SILVER PLATED GASKETS

Ordering Information	Face Seal size	D		d		S	
	inch	mm	inch	mm	inch	mm	inch
GA-1/4 SILVER PLATED	1/4	11.9	0.47	5.6	0.22	0.7	0.028
GA-1/2 SILVER PLATED	1/2	19.8	0.78	11.2	0.44	0.7	0.028
GA-3/4 SILVER PLATED	3/4	29.0	1.14	16.8	0.66	0.7	0.028
GA-1 SILVER PLATED	1	35.6	1.40	22.6	0.89	0.7	0.028

GA-RT

RETAINED GASKET

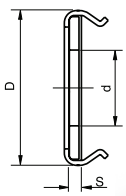

UNPLATED RETAINED GASKETS

Ordering Information	Face Seal size	D		d		S	
	inch	mm	inch	mm	inch	mm	inch
GA-1/4 -RT- E	1/4	12.7	0.50	6.1	0.24	0.7	0.028
GA-1/2 -RT- E	1/2	20.1	0.79	11.1	0.44	0.7	0.028

SILVER PLATED RETAINED GASKETS

Ordering Information	Face Seal size	D		d		S	
	inch	mm	inch	mm	inch	mm	inch
GA-1/4-RT SILVER PLATED	1/4	12.7	0.50	6.1	0.24	0.7	0.028
GA-1/2-RT SILVER PLATED	1/2	20.1	0.79	11.1	0.44	0.7	0.028
GA-3/4-RT SILVER PLATED	3/4	29.0	1.14	16.8	0.66	0.7	0.028
GA-1-RT SILVER PLATED	1	35.6	1.40	22.6	0.89	0.7	0.028

Dimensions are for reference only, and are subject to change without notice.
When ordering, be sure to add the Surface-Finish Designator (either H or E) to the part Number. (See Material Table, page 145).

HGL

LONG HIGH FLOW GLAND

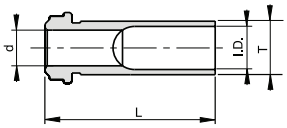

Ordering Information	Face Seal size	L		d		T Tube O.D	I.D.	
	inch	mm	inch	mm	inch	inch	mm	inch
V-HGL-3/8 - 0.6	1/4	15.2	0.60	6.4	0.25	3/8	7.7	0.30
V-HGL-3/8 - 1.13	1/4	28.7	1.13	6.4	0.25	3/8	7.7	0.30
V-HGL-3/8 - 1.19	1/4	30.2	1.19	6.4	0.25	3/8	7.7	0.30
V-HGL-3/8 - 1.31	1/4	33.3	1.31	6.4	0.25	3/8	7.7	**0.30**

HMT

HIGH FLOW MALE TO TUBE

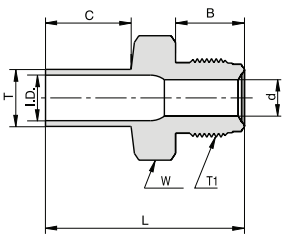

Ordering Information	Face Seal size	L		B		C		d		W	T Tube O.D.	T1 Thread size	I.D.	
	inch	mm	inch	mm	inch	mm	inch	mm	inch	inch	inch	inch	mm	inch
P- HMT 1/4	1/4	42.7	1.68	15.8	0.62	19.1	0.75	6.4	0.25	5/8	3/8	9/16 - 18	7.7	0.30

HNF

HIGH FLOW FEMALE NUT

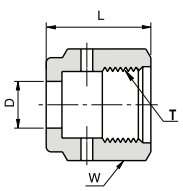

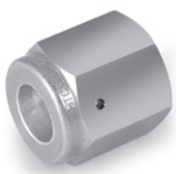

Ordering Information	Face Seal size	L		D		W	T Thread size
	inch	mm	inch	mm	inch	inch	inch
P - HNF 1/4	1/4	20.6	0.81	10.0	0.39	3/4	9/16 - 18

HNM

HIGH FLOW MALE NUT

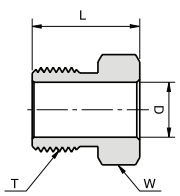

Ordering Information	Face Seal size	L		D		T Thread size	W
	inch	mm	inch	mm	inch	inch	inch
P - HNM 1/4	1/4	18.0	0.71	10.0	0.39	9/16 - 18	5/8

Dimensions are for reference only, and are subject to change without notice.
When ordering, be sure to add the Surface-Finish Designator (either H or E) to the part Number. (See Material Table, page 145).

GRIPKIT®

Gripkit® is a patented product designed to help preventing potential leaks in metal–gasket face–seal fittings. The Gripkit® is designed for use with critical, semiconductor–industry ultra–pure and high–purity gas applications, as well as vacuum delivery systems. The product is color coded for easy identification within the system and is engineered to be used with the fitting components of most major manufacturers.

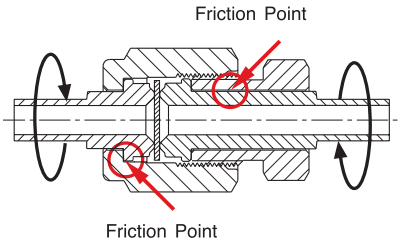

MATERIAL Gripkit® consists of three components:		
Part Number	Description	Material
GK-NY-M4	5/8" Hex male crescent adapter	Blue Nylon
GK-NY-F4	3/4" Hex female crescent adapter	Blue Nylon
GK-1-CL-WH	White color coded clamp	Acetyl
GK-1-CL-BL	Blue color coded clamp	Acetyl
GK-1-CL-YL	Yellow color coded clamp	Acetyl
GK-1-CL-RD	Red color coded clamp	Acetyl
GK-1-CL-GR	Green color coded clamp	Acetyl

HOW IT WORKS

The Gripkit® fixes the position of the male nut relative to the female nut, and therefore, the distance between the two sealing glands. Consequently, when torque is applied to either side of the fitting connection, it does not cause the nuts to rotate in opposition and lose their compression on the gasket. In extreme cases, when very high torque is applied to the fitting joint, the glands may rotate within the fixed nuts, but the connector will remain intact. Gripkit will prevent the kind of catastrophic leak that results from the loss of gland compression on the gasket.

WHY USE GRIPKIT®?

When pipe fitters, maintenance technicians and operators work on gas distribution systems, they can accidentally "torque" the system, causing fittings down–line to come apart. Most veteran gas system engineers recognize this common phenomenon. Another widespread problem occurs when a fitting connection "shakes apart" because it is mounted on, or near, vibrating equipment. Sources of system vibration include pumps, motors, pneumatic actuators, as well as mobile equipment. Gripkit® offers a very inexpensive solution to these real and potentially costly problems.

1" x 5/8" CRESCENT SECTION

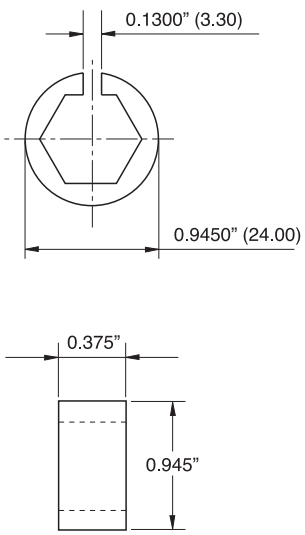

1" x 3/4" CRESCENT SECTION

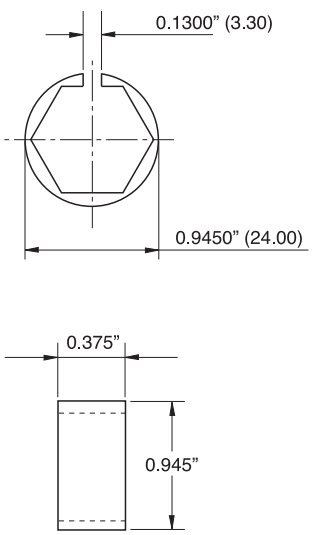

1" CLAMP SECTION

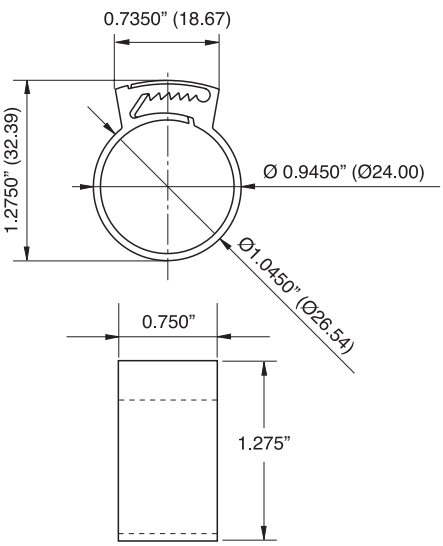

HIGH PERFORMANCE BALL VALVES

H-6800 SERIES

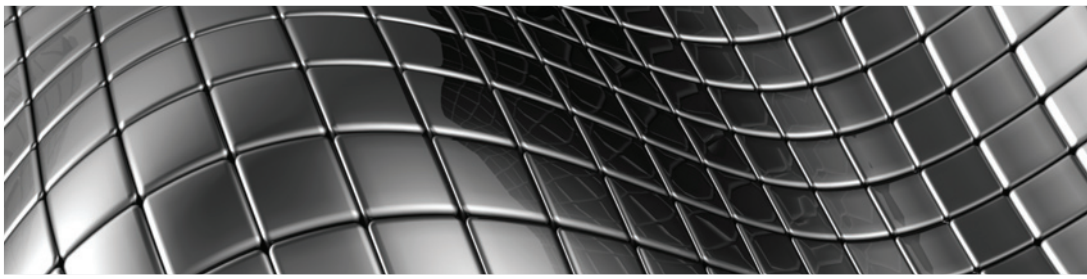

HAM-LET®
ADVANCED CONTROL TECHNOLOGY

H-6800 FEATURES

- On/off-service ball valve with 2-way pattern
- Diverter-service ball valve with 3-way pattern
- Stainless Steel and Brass construction
- MAWP* 6000 psi (410 bar)
- MAWT* 500ºF (260ºC)
- Variable end connection types and sizes from 1/16” to 3/4” (3mm to 18mm)
- Operation with colored Nylon handles, metal handle color anodized aluminum ISLT** (locking device) handles and pneumatically actuated.

* Maximum Allowed Working Pressure, Maximum Allowed Working Temperature.
** ISLT – Integral Safety Lock-out Tag-out Patent pending

GENERAL

The H-6800 Series is a high-performance instrumentation ball valve for general service and instrumentation panels. The valves offer tight shutoff*, long-life service and low operating torque. The H-6800 Series is rated to max. 6000psig and performs on/off or diverter service.

***3-Way H-6800** is designed for diverting only and not for shutoff service. Inlet is from the bottom only. 3-Way H-6800 is designed to be fully opened to any of the side ports.

MATERIAL OF CONSTRUCTION

No.	Part	Qty	Maximum allowed working pressure	
			Up to 3000 psig	Up to 6000 psig
1	Handle	1	Nylon / Metal / ISLT	Nylon / Metal / ISLT
2	Handle Set Screw	1	St.St.304	St.St.304
3	Packing Bolt	1	St.St.316	St.St.316
4	Packing	3	Virgin PTFE	PTFE / PEEK
5	Gland	2	St.St.304	St.St.304
6	Stem	1	St.St.316	St.St.316
7	Ball	1	St.St.316	St.St.316
8	Panel Nut	1	St.St.303 / Brass	St.St.303
9	End Cap	2	St.St.316 / Brass	St.St.316
10	Body Seal	2	Virgin PTFE	PTFE / PEEK
11	Seat	2	TFM® 1600	PCTFE / PEEK
12	Body	1	St.St. ASTM A351 Gr.CF8M Brass ASTM B-16	St.St. ASTM A-276

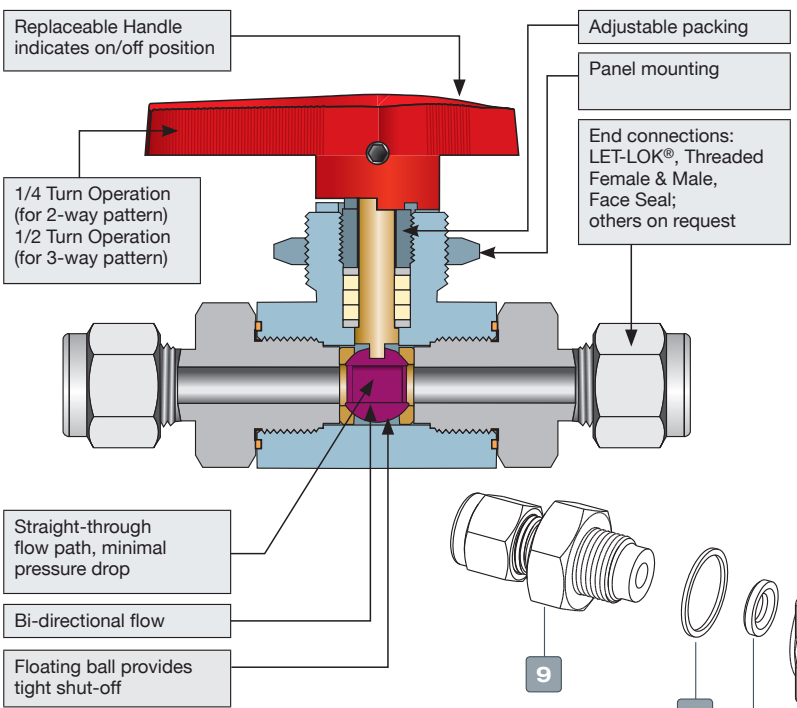

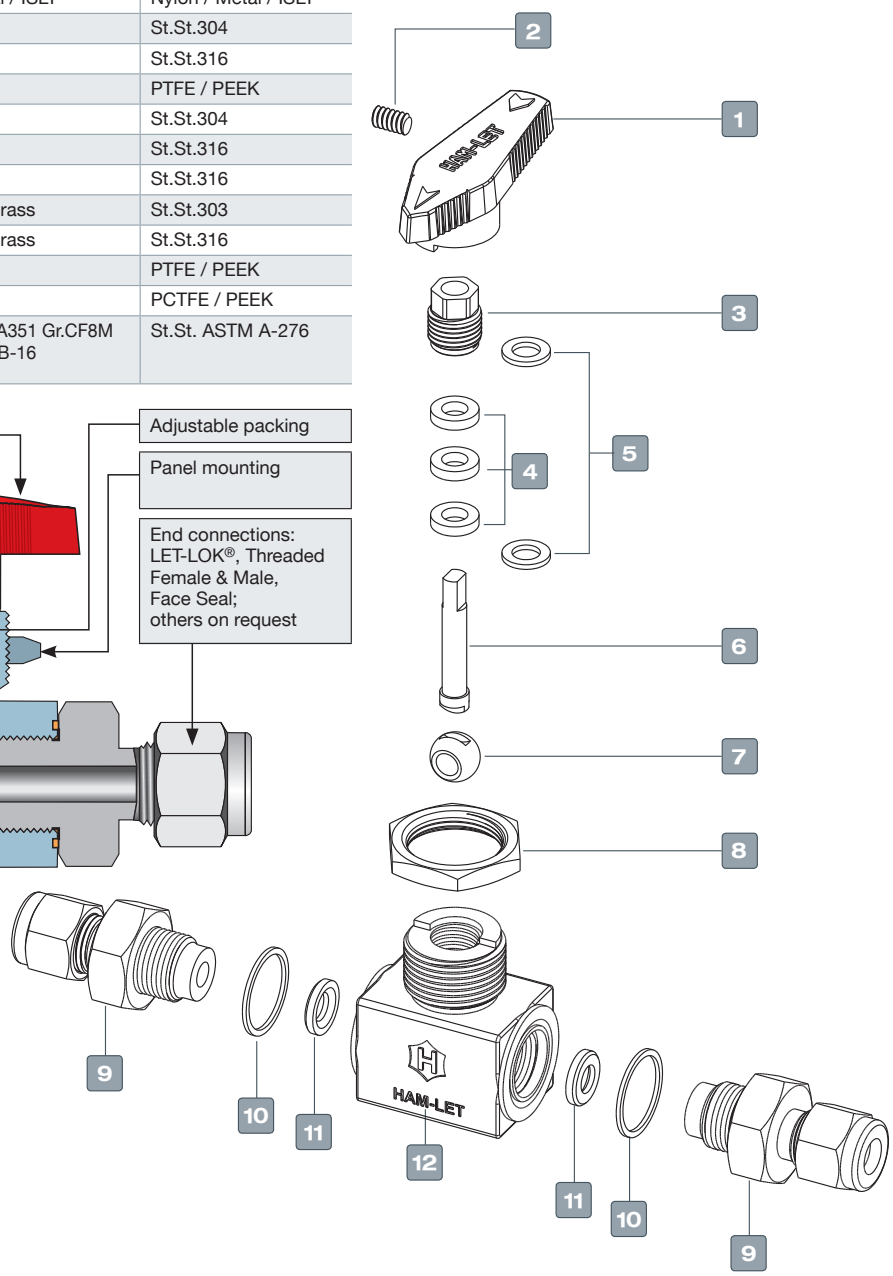

TESTING

The H-6800 design has been tested for Burst and Proof. Standard testing for each H-6800 valve includes testing with nitrogen at 80 &1000Psig. Each valve is tested for leakage through the shell, packing and ball seats. The maximum allowable leakage across the ball seats is 0.1 std cc/min.

CLEANING & PACKAGING

HAM-LET H-6800 Ball Valve is treated with HAM-LET Passivation Cleaning and Packaging (Procedure 8075). Oxygen Cleaning and Packaging (Procedure 8055) is available as an option. Cleaning and packaging procedures 8075 and 8055 are available for reference on HAM-LET website.

PRESSURE TEMPERATURE RATINGS

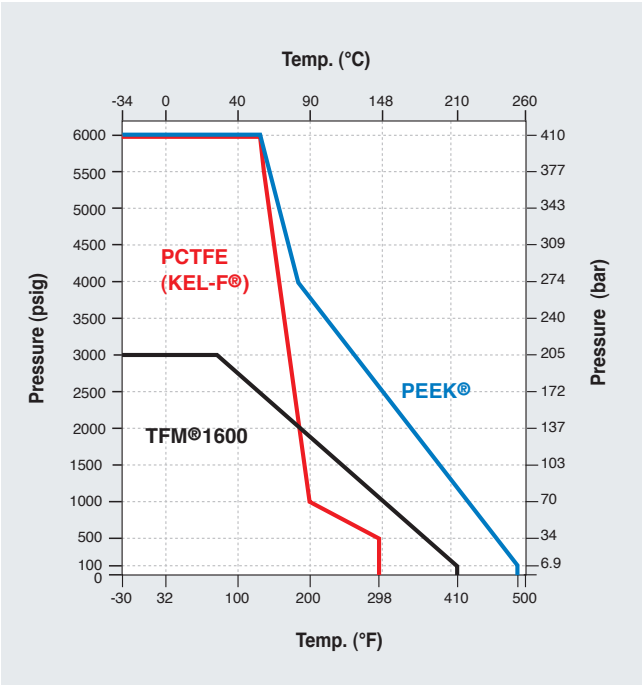

SEAT MATERIAL CHARACTERISTICS

TFM1600
Excellent seat material for purity applications. Very low residual material during operation. Lower deformation ratio than PTFE, but higher pressure and temperature ratings than PTFE. Rated up to 410°F (210°C). Chemical resistance equal to PTFE material.

PCTFE (Kel-F®)
Excellent seat material for low temperature applications such as Oxygen and Nitrogen.
Suitable for low temperature applications down to -40°C (-40°F).

PEEK (PolyEtherEtherKeton)
Excellent seat material for high-pressure and high-temperature applications. Excellent chemical resistance. Can be used continuosly to 500°F (260°C) and in hot water or steam without permanent loss in physical properties. High strength for hostile enviroment and high pressure.

PACKING ADJUSTMENT

Due to the varied service applications of the valve, packing adjustment may be occasionally necessary. Packing is factory adjusted to 1000 psig service. Initial adjustment is recommended after installation and prior to start-up. Please find more information in the installation instruction chapter. HAM-LET Ball Valves are designed for operation in the fully closed or fully open position.

BODY & SEAT MATERIAL COMBINATIONS

Body Material	MAWP*	MAWT**	Seat Material
St.St. ASTM A351 Gr. CF8M	3000psi (206bar)	410°F (210°C)	TFM1600®
St.St. ASTM A-276	6000psi (410bar)	500°F (260°C)	PEEK
St.St. ASTM A-276	6000psi (410bar)	284°F (140°C)	PCTFE
Brass ASTM B-16	3000psi (206bar)	410°F (210°C)	TFM 1600®

For other body and seat combinations, please contact our cutomer service.
* Maximum Allowed Working Pressure.
** Maximum Allowed Working Temperature.

ANGLE AND 3-WAY VALVE

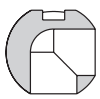

L - Port Ball

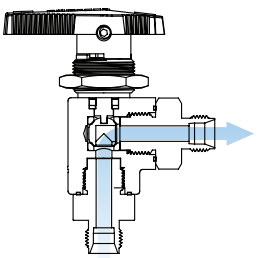

NOTE: Bottom entry only

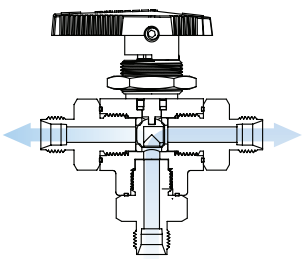

NOTE: Bottom entry only

MANUAL OPERATION

*Black Nylon Handle with brass insert is standard.

STRAIGHT PORT VALVE

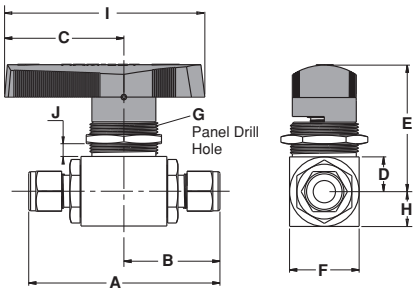

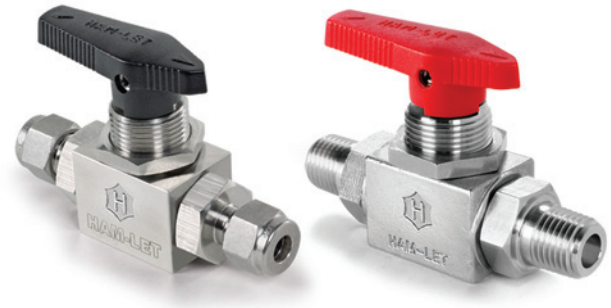

STRAIGHT PORT, STANDARD CONFIGURATION DIMENSIONS

Size	End Connection		Orifice		Cv	A		B		C		D		E		F		G		H		I*		J**	
	mm	inch	mm	inch		mm	in	mm	in	mm	in	mm	in	mm	in	mm	in	mm	in	mm	in	mm	in	mm	in
1/16''	Let-Lok® Inch		1.3	0.051	0.1	70.2	2.76	35.1	1.38	31.0	1.22	11.1	0.44	38.85	1.53	22.2	0.87	19.3	0.76	11.1	0.44	50.0	1.96	6.5	0.255
1/8''			2.4	0.094	0.2	78.6	3.09	39.3	1.55	31.0	1.22	11.1	0.44	38.85	1.53	22.2	0.87	19.3	0.76	11.1	0.44	50.0	1.96	6.5	0.255
1/4''			4.8	0.189	2.4	83.6	3.29	41.8	1.65	31.0	1.22	11.1	0.44	38.85	1.53	22.2	0.87	19.3	0.76	11.1	0.44	50.0	1.96	6.5	0.255
3/8''			4.8	0.189	1.5	86.3	3.40	43.15	1.70	31.0	1.22	11.1	0.44	38.85	1.53	22.2	0.87	19.3	0.76	11.1	0.44	50.0	1.96	6.5	0.255
1/2''			10.3	0.409	12	102.5	4.04	51.25	2.02	50.0	1.97	16.0	0.63	50.0	1.97	32.0	1.26	20.8	0.82	16.0	0.63	80.0	3.15	6.5	0.255
3/4''			10.3	0.409	6.5	102.5	4.04	51.25	2.02	50.0	1.97	16.0	0.63	50.0	1.97	32.0	1.26	20.8	0.82	16.0	0.63	80.0	3.15	6.5	0.255
3mm	Let-Lok® Metric		2.4	0.094	0.2	78.6	3.09	39.3	1.55	31.0	1.22	11.1	0.44	38.85	1.53	22.2	0.87	19.3	0.76	11.1	0.44	50.0	1.96	6.5	0.255
6mm			4.8	0.189	2.4	83.6	3.29	41.8	1.65	31.0	1.22	11.1	0.44	38.85	1.53	22.2	0.87	19.3	0.76	11.1	0.44	50.0	1.96	6.5	0.255
8mm			4.8	0.189	1.5	84.8	3.34	42.4	1.67	31.0	1.22	11.1	0.44	38.85	1.53	22.2	0.87	19.3	0.76	11.1	0.44	50.0	1.96	6.5	0.255
10mm			4.8	0.189	1.5	86.4	3.40	43.2	1.70	31.0	1.22	11.1	0.44	38.85	1.53	22.2	0.87	19.3	0.76	11.1	0.44	50.0	1.96	6.5	0.255
12mm			10.3	0.409	12	102.5	4.04	51.25	2.02	50.0	1.97	16.0	0.63	50.0	1.97	32.0	1.26	20.8	0.82	16.0	0.63	80.0	3.15	6.5	0.255
18mm			10.3	0.409	6.5	102.5	4.04	51.25	2.02	50.0	1.97	16.0	0.63	50.0	1.97	32.0	1.26	20.8	0.82	16.0	0.63	80.0	3.15	6.5	0.255
1/8''	Female NPT/ BSPT		4.8	0.189	1.2	63.6	2.50	31.8	1.25	31.0	1.22	11.1	0.44	38.85	1.53	22.2	0.87	19.3	0.76	11.1	0.44	50.0	1.96	6.5	0.255
1/4''			4.8	0.189	0.9	64.0	2.52	32.0	1.26	31.0	1.22	11.1	0.44	38.85	1.53	22.2	0.87	19.3	0.76	11.1	0.44	50.0	1.96	6.5	0.255
3/8''			4.8	0.189	0.6	69.6	2.74	34.8	1.37	31.0	1.22	11.1	0.44	38.85	1.53	22.2	0.87	19.3	0.76	11.1	0.44	50.0	1.96	6.5	0.255
1/2''			10.3	0.409	6.3	87.4	3.44	43.7	1.72	50.0	1.97	16.0	0.63	50.0	1.97	32.0	1.26	20.8	0.82	16.0	0.63	80.0	3.15	6.5	0.255
3/4''			10.3	0.409	3.8	91.0	3.58	45.5	1.79	50.0	1.97	16.0	0.63	50.0	1.97	32.0	1.26	20.8	0.82	16.0	0.63	80.0	3.15	6.5	0.255
1/8''	Female BSPP		4.8	0.189	1.2	63.6	2.50	31.8	1.25	31.0	1.22	11.1	0.44	38.85	1.53	22.2	0.87	19.3	0.76	11.1	0.44	50.0	1.96	6.5	0.255
1/4''			4.8	0.189	0.9	64.0	2.52	32.0	1.26	31.0	1.22	11.1	0.44	38.85	1.53	22.2	0.87	19.3	0.76	11.1	0.44	50.0	1.96	6.5	0.255
3/8''			4.8	0.189	0.6	69.6	2.74	34.8	1.37	31.0	1.22	11.1	0.44	38.85	1.53	22.2	0.87	19.3	0.76	11.1	0.44	50.0	1.96	6.5	0.255
1/2''			10.3	0.409	6.3	87.4	3.44	43.7	1.72	50.0	1.97	16.0	0.63	50.0	1.97	32.0	1.26	20.8	0.82	16.0	0.63	80.0	3.15	6.5	0.255
3/4''			10.3	0.409	3.5	91.0	3.58	45.5	1.79	50.0	1.97	16.0	0.63	50.0	1.97	32.0	1.26	20.8	0.82	16.0	0.63	80.0	3.15	6.5	0.255
1/8''	Male NPT/ BSPT		4.8	0.189	1.5	67.6	2.66	33.8	1.33	31.0	1.22	11.1	0.44	38.85	1.53	22.2	0.87	19.3	0.76	11.1	0.44	50.0	1.96	6.5	0.255
1/4''			4.8	0.189	1.2	76.6	3.02	38.3	1.51	31.0	1.22	11.1	0.44	38.85	1.53	22.2	0.87	19.3	0.76	11.1	0.44	50.0	1.96	6.5	0.255
3/8''			4.8	0.189	0.9	76.6	3.02	38.3	1.51	31.0	1.22	11.1	0.44	38.85	1.53	22.2	0.87	19.3	0.76	11.1	0.44	50.0	1.96	6.5	0.255
1/2''			10.3	0.409	8.2	92.4	3.64	46.2	1.82	50.0	1.97	16.0	0.63	50.0	1.97	32.0	1.26	20.8	0.82	16.0	0.63	80.0	3.15	6.5	0.255
3/4''			10.3	0.409	4.5	94.4	3.71	47.2	1.86	50.0	1.97	16.0	0.63	50.0	1.97	32.0	1.26	20.8	0.82	16.0	0.63	80.0	3.15	6.5	0.255
1/8''	Male BSPP		4.8	0.189	1.5	65.4	2.57	32.7	1.29	31.0	1.22	11.1	0.44	38.85	1.53	22.2	0.87	19.3	0.76	11.1	0.44	50.0	1.96	6.5	0.255
1/4''			4.8	0.189	1.2	76.6	3.02	38.3	1.51	31.0	1.22	11.1	0.44	38.85	1.53	22.2	0.87	19.3	0.76	11.1	0.44	50.0	1.96	6.5	0.255
3/8''			4.8	0.189	0.9	76.6	3.02	38.3	1.51	31.0	1.22	11.1	0.44	38.85	1.53	22.2	0.87	19.3	0.76	11.1	0.44	50.0	1.96	6.5	0.255
1/2''			10.3	0.409	8.2	92.4	3.64	46.2	1.82	50.0	1.97	16.0	0.63	50.0	1.97	32.0	1.26	20.8	0.82	16.0	0.63	80.0	3.15	6.5	0.255
3/4''			10.3	0.409	4.5	94.4	3.71	47.2	1.86	50.0	1.97	16.0	0.63	50.0	1.97	32.0	1.26	20.8	0.82	16.0	0.63	80.0	3.15	6.5	0.255
1/4''	Face Seal Male		4.5	0.18	2.4	75.0	2.95	37.5	1.47	31.0	1.22	11.1	0.44	38.85	1.53	22.2	0.87	19.3	0.76	11.1	0.44	50.0	1.96	6.5	0.255
1/2''			10.3	0.409	12	93.8	3.69	46.9	1.85	50.0	1.97	16.0	0.63	50.0	1.97	32.0	1.26	20.8	0.82	16.0	0.63	80.0	3.15	6.5	0.255

Face to face dimensions for LET-LOK® end connections (dimensions A and B) are finger tight.
* Refers to standard nylon handle.
** Maximum panel thickness.

Dimensions are for reference only, and are subject to change.

ANGLE & 3-PORT VALVE

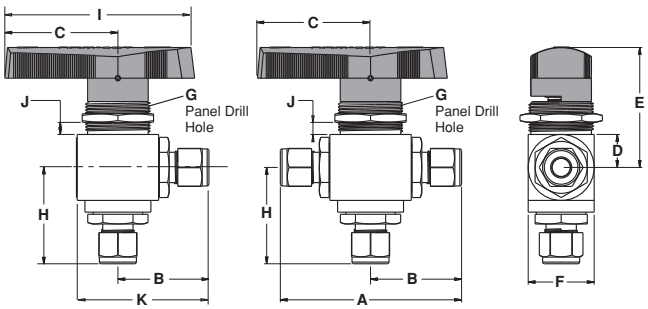

ANGLE & 3-PORT, STANDARD CONFIGURATION DIMENSIONS

Size	End Connection	Orifice		Cv	A		K		B		C		D		E		F		G		H		I*		J**	
	mm inch	mm	inch		mm	in	mm	in	mm	in	mm	in	mm	in	mm	in	mm	in	mm	in	mm	in	mm	in	mm	in
1/16''	Let-Lok® Inch	1.3	0.051	0.08	70.2	2.76	46.2	1.82	35.1	1.38	31.0	1.22	11.1	0.44	38.85	1.53	22.2	0.87	19.3	0.76	37.9	1.49	50.0	1.96	6.5	0.255
1/8''		2.4	0.094	0.15	78.6	3.09	50.4	1.95	39.3	1.55	31.0	1.22	11.1	0.44	38.85	1.53	22.2	0.87	19.3	0.76	42.1	1.66	50.0	1.96	6.5	0.255
1/4''		4.8	0.189	0.90	83.6	3.29	52.9	2.08	41.8	1.65	31.0	1.22	11.1	0.44	38.85	1.53	22.2	0.87	19.3	0.76	44.6	1.76	50.0	1.96	6.5	0.255
3/8''		4.8	0.189	0.60	86.3	3.40	54.25	2.13	43.15	1.70	31.0	1.22	11.1	0.44	38.85	1.53	22.2	0.87	19.3	0.76	46.0	1.81	50.0	1.96	6.5	0.255
1/2''		10.3	0.40	4.6	102.5	4.04	67.3	2.65	51.25	2.02	50.0	1.97	16.0	0.63	50.0	1.97	32.0	1.26	20.8	0.82	57.5	2.26	80.0	3.15	6.5	0.255
3/4''		10.3	0.40	3.8	102.5	4.04	67.3	2.65	51.25	2.02	50.0	1.97	16.0	0.63	50.0	1.97	32.0	1.26	20.8	0.82	57.5	2.26	80.0	3.15	6.5	0.255
3mm	Let-Lok® Metric	2.4	0.094	0.15	78.6	3.09	52.0	2.05	39.3	1.55	31.0	1.22	11.1	0.44	38.85	1.53	22.2	0.87	19.3	0.76	42.1	1.66	50.0	1.96	6.5	0.255
6mm		4.8	0.189	0.90	83.6	3.29	52.8	2.08	41.8	1.65	31.0	1.22	11.1	0.44	38.85	1.53	22.2	0.87	19.3	0.76	44.6	1.76	50.0	1.96	6.5	0.255
8mm		4.8	0.189	0.80	84.8	3.34	53.5	2.1	42.4	1.67	31.0	1.22	11.1	0.44	38.85	1.53	22.2	0.87	19.3	0.76	45.2	1.78	50.0	1.96	6.5	0.255
10mm		4.8	0.189	0.60	86.4	3.40	54.3	2.14	43.2	1.70	31.0	1.22	11.1	0.44	38.85	1.53	22.2	0.87	19.3	0.76	46.0	1.81	50.0	1.96	6.5	0.255
12mm		10.3	0.40	4.6	102.5	4.04	67.3	2.65	51.25	2.02	50.0	1.97	16.0	0.63	50.0	1.97	32.0	1.26	20.8	0.82	57.5	2.11	80.0	3.15	6.5	0.255
18mm		10.3	0.40	2.5	102.5	4.04	67.3	2.65	51.25	2.02	50.0	1.97	16.0	0.63	50.0	1.97	32.0	1.26	20.8	0.82	57.5	1.19	80.0	3.15	6.5	0.255
1/8''	Female NPT/ BSPT	4.8	0.189	0.3	63.6	2.50	42.9	1.7	32.0	1.26	31.0	1.22	11.1	0.44	38.85	1.53	22.2	0.87	19.3	0.76	34.6	1.36	50.0	1.96	6.5	0.255
1/4''		4.8	0.189	0.75	64.0	2.52	43.1	1.69	31.8	1.25	31.0	1.22	11.1	0.44	38.85	1.53	22.2	0.87	19.3	0.76	34.8	1.37	50.0	1.96	6.5	0.255
3/8''		4.8	0.189	0.5	69.6	2.74	45.9	1.8	34.8	1.37	31.0	1.22	11.1	0.44	38.85	1.53	22.2	0.87	19.3	0.76	37.6	1.48	50.0	1.96	6.5	0.255
1/2''		10.3	0.40	3.5	87.4	3.44	59.7	2.35	43.7	1.72	50.0	1.97	16.0	0.63	50.0	1.97	32.0	1.26	20.8	0.82	50.0	1.97	80.0	3.15	6.5	0.255
3/4''		10.3	0.40	2.5	91.0	3.58	61.5	2.42	45.5	1.79	50.0	1.97	16.0	0.63	50.0	1.97	32.0	1.26	20.8	0.82	50.0	1.97	80.0	3.15	6.5	0.255
1/8''	Female BSPP	4.8	0.189	0.3	63.6	2.50	42.9	1.7	32.0	1.26	31.0	1.22	11.1	0.44	38.85	1.53	22.2	0.87	19.3	0.76	34.6	1.36	50.0	1.96	6.5	0.255
1/4''		4.8	0.189	0.75	64.0	2.52	43.1	1.69	31.8	1.25	31.0	1.22	11.1	0.44	38.85	1.53	22.2	0.87	19.3	0.76	34.8	1.37	50.0	1.96	6.5	0.255
3/8''		4.8	0.189	0.5	69.6	2.74	45.9	1.8	34.8	1.37	31.0	1.22	11.1	0.44	38.85	1.53	22.2	0.87	19.3	0.76	37.6	1.48	50.0	1.96	6.5	0.255
1/2''		10.3	0.40	3.5	87.4	3.44	59.7	2.35	43.7	1.72	50.0	1.97	16.0	0.63	50.0	1.97	32.0	1.26	20.8	0.82	50.0	1.97	80.0	3.15	6.5	0.255
3/4''		10.3	0.40	2.5	91.0	3.58	61.5	2.42	45.5	1.79	50.0	1.97	16.0	0.63	50.0	1.97	32.0	1.26	20.8	0.82	50.0	1.97	80.0	3.15	6.5	0.255
1/8''	Male NPT/ BSPT	4.8	0.189	0.9	67.6	2.66	44.9	1.76	33.8	1.33	31.0	1.22	11.1	0.44	38.85	1.53	22.2	0.87	19.3	0.76	36.6	1.44	50.0	1.96	6.5	0.255
1/4''		4.8	0.189	0.6	76.6	3.02	49.4	1.94	38.3	1.51	31.0	1.22	11.1	0.44	38.85	1.53	22.2	0.87	19.3	0.76	41.1	1.62	50.0	1.96	6.5	0.255
3/8''		4.8	0.189	0.35	76.6	3.02	49.4	1.94	38.3	1.51	31.0	1.22	11.1	0.44	38.85	1.53	22.2	0.87	19.3	0.76	41.1	1.62	50.0	1.96	6.5	0.255
1/2''		10.3	0.40	3.0	92.4	3.64	62.2	2.45	46.2	1.82	50.0	1.97	16.0	0.63	50.0	1.97	32.0	1.26	20.8	0.82	52.5	2.07	80.0	3.15	6.5	0.255
3/4''		10.3	0.40	2.0	94.4	3.71	63.2	2.49	47.2	1.86	50.0	1.97	16.0	0.63	50.0	1.97	32.0	1.26	20.8	0.82	53.5	2.1	80.0	3.15	6.5	0.255
1/8''	Male BSPP	4.8	0.189	0.9	65.4	2.57	43.8	1.72	32.7	1.29	31.0	1.22	11.1	0.44	38.85	1.53	22.2	0.87	19.3	0.76	36.6	1.44	50.0	1.96	6.5	0.255
1/4''		4.8	0.189	0.6	76.6	3.02	49.4	1.94	38.3	1.51	31.0	1.22	11.1	0.44	38.85	1.53	22.2	0.87	19.3	0.76	41.1	1.62	50.0	1.96	6.5	0.255
3/8''		4.8	0.189	0.35	76.6	3.02	49.4	1.94	38.3	1.51	31.0	1.22	11.1	0.44	38.85	1.53	22.2	0.87	19.3	0.76	41.1	1.62	50.0	1.96	6.5	0.255
1/2''		10.3	0.40	3.0	92.4	3.64	62.2	2.45	46.2	1.82	50.0	1.97	16.0	0.63	50.0	1.97	32.0	1.26	20.8	0.82	52.5	2.07	80.0	3.15	6.5	0.255
3/4''		10.3	0.40	2.0	94.4	3.71	63.2	2.49	47.2	1.86	50.0	1.97	16.0	0.63	50.0	1.97	32.0	1.26	20.8	0.82	53.5	2.1	80.0	3.15	6.5	0.255
1/4''	Face Seal Male	4.5	0.18	0.9	75.0	2.95	48.6	1.91	37.5	1.47	31.0	1.22	11.1	0.44	38.85	1.53	22.2	0.87	19.3	0.76	40.3	1.58	50.0	1.96	6.5	0.255
1/2''		10.3	0.40	4.6	93.8	3.69	62.9	2.47	46.9	1.85	50.0	1.97	16.0	0.63	50.0	1.97	32.0	1.26	20.8	0.82	53.2	2.09	80.0	3.15	6.5	0.255

DIMENSIONS FOR METAL HANDLE

VALVE ENDS	Handle Designator	N	L
Up to 3/8 ends	M	50 MM	31 MM
Up to 3/8 ends	M7	70 MM	45 MM
From 1/2 to 3/4 ends	M	110 MM	80 MM

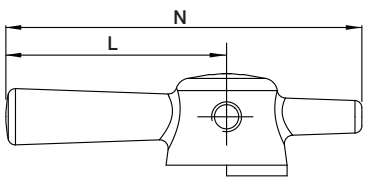

See Ordering Information

ISLT

Integral Safety
LockOut-TagOut Device

ISLT

GENERAL

The integral locking mechanism enables safe and easy-to-use solutions for valve position locking and tagging. The design prevents undesirable valve position changes, even if no locking equipment is used. Available for 2-way straight and angle pattern in locked-open and locked-closed positions.
For 3-way pattern valves, the ISLT handle allows locking in left and right positions.

ISLT DEVICE CONSTRUCTION

No.	Part	Qty	Material
1	Handle	1	Aluminum anodized
2	Latch	1	St.St.304
3	Pin	1	St.St.304
4	Spring	1	St.St.302
5	Set Screw	1	St.St.304

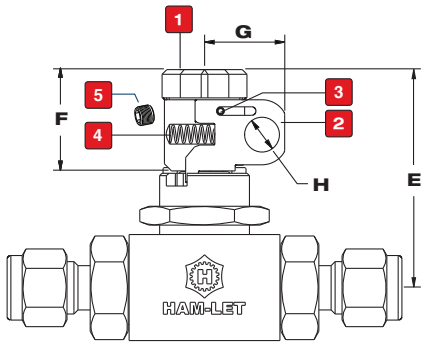

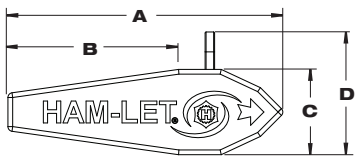

H-6800 ISLT HANDLE - DIMENSIONS

VALVE SIZE	A		B		C		D		E		F		G		H	
	inch	mm	inch	mm	inch	mm	inch	mm	inch	mm	inch	mm	inch	mm	inch	mm
1/16'' to 3/8''	2.28	58.0	1.18	30.0	0.71	18.0	1.06	26.0	1.82	46.3	0.85	21.5	0.67	17.0	0.28	7.2
1/2'' to 3/4''	4.28	108.7	2.76	70.2	1.1	28.0	1.59	39.0	2.70	68.7	1.3	33.0	0.98	25.0	0.37	9.50

ISLT-Locking Device Al6061 Anodized Handle (St.St. internal components)
For color selection, please see ordering information on page 184.

ISLTS - ISLT Black
ISLTB - ISLT Blue
ISLTR - ISLT Red
ISLTY - ISLT Yellow
ISLTG - ISLT Green

For ordering handle type or kit use the ordering information.

H-6800 - PNEUMATIC ACTUATED VALVES

FEATURES

- 90° Actuation for 2-way valves (Straight & Angle)
- 180° Actuation for T-type valves
- Actuators comply with industry standards for interface with ISO 5211, NAMUR and VDI/VDE 3845
- Actuated valves are available factory assembled or seperately, actuator and mounting kits
- Limit switches, proximity sensors, position indicators, pilot valves, and other accessories are available upon request
- Standard Temperature range: -32°C to 90°C (-25.6°F to 194°F)
  Optional: High Temperature, Low Temperature

GENERAL

Four standard actuator sizes are available upon request: Mini (designator "**A1**"), Small (designator "**A2**"), Medium (designator "**A3**"), Large (designator "**A4**") and 180° Actuator (designator "**A2T**").
Improved operational speed enables better valve opening and closing control.
ATEX certification of Valves-Actuators assemblies are available on request at the time of order quotation.

MATERIAL OF CONSTRUCTION

No.	Part	Qty	Material
1	Actuator	1	AL 356-T5
2	Coupling	1	St.St.316
3	Bracket	1	St.St.304
4	Washer Flat	4	St.St.304
5	Washer Spring	4	St.St.304
5	Screw	4	St.St.304
6	Panel Nut	1	St.St.316
7	H6800	1	St.St.316 / Brass *

* Body material: St.St. ASTM A-276;
St.St. ASTM A351 Gr. CF8M; Brass ASTM B-16

90° Actuator on 2-way valve

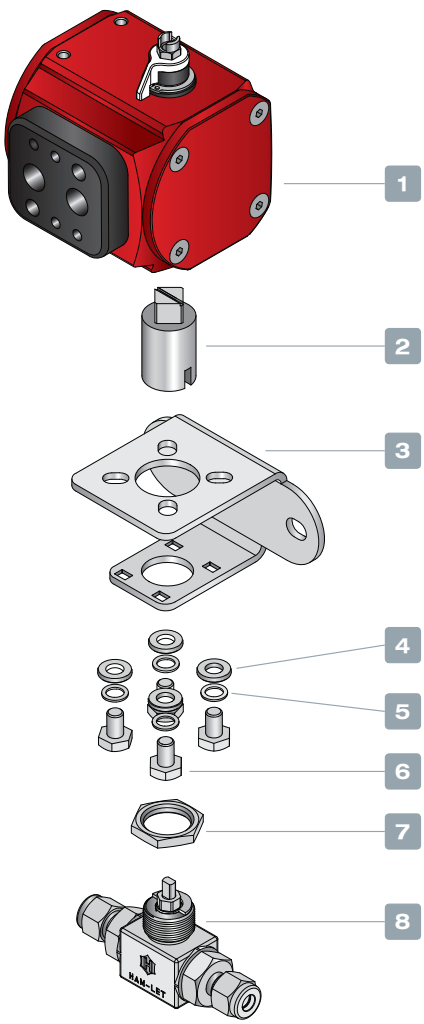

180° Actuator on T-type valve

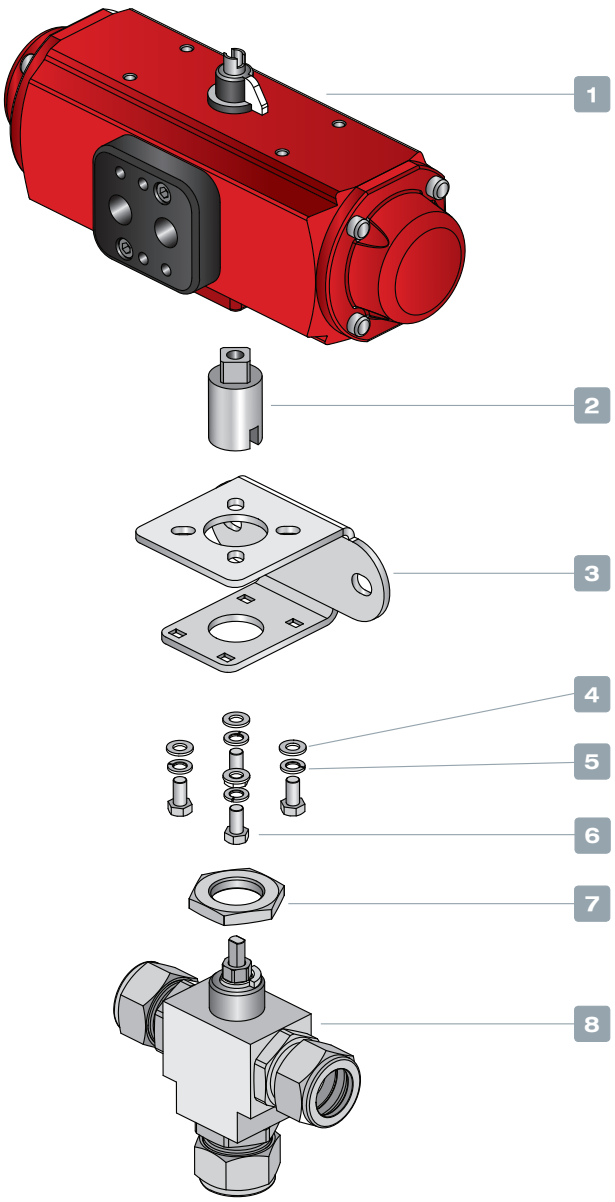

HAM-LET PNEUMATIC ACTUATORS

ACTUATED H-6800 SERIES

Selection of Valve-Actuator assemblies provided herein is based on:

- Valve maximum allowable working pressure
- Ambient temperature (50 to 100°F /10 to 37°C)
- Actuator fits to valve based on operating pressure of 6 bar, as per table.

To order H-6800 ball valve factory assembled with an actuator, add the actuator designator to the valve part number / description per the below table.
For example:
H-6800-SS-L-1/4-PSS with standard Double Acting Aluminum Actuator
H-6800-SS-L-1/4-PS-A1
To order an actuator and mounting kit for field assembly:
Double acting Actuator ordering number: Z-A1
Corresponding mounting kit: Z-6800-MK-1/4-F03-F04-A1

Tabel A: Ordering information for Actuated Valves

Series	Ends Size	Seats	Minimum Actuator Operating Pressure Bar (Psi)	Actuator Designators (Factory assembled)			Actuator Ordering Code		Mounting Kit Ordering Info
				Spring Return		Double Acting	Spring Return	Double Acting	
				NO	NC				
H-6800	1/16”-3/8” (3mm-10mm)	TFM 1600 PCTFE PEEK	5 (72.5)	A1O	A1C	A1	Z-A1S	Z-A1	Z-6800-MK-1/4”-F03-F04-A1
	1/2”-3/4” (12mm18mm)	TFM 1600	5 (72.5)	A1O	A1C	A1	Z-A1S	Z-A1	Z-6800-MK-1/2”-F03-F04-A1
		PCTFE PEEK	5 (72.5)	A2O	A2C	A2	Z-A2S	Z-A2	Z-6800-MK-1/2”-F03-F04-A2
H-6800 T-type	1/16”-3/8” (3mm-10mm)	TFM 1600 PCTFE PEEK	5 (72.5)	A2TS	A2TS	A2T	Z-A2TS	Z-A2T	Z-6800-MK- 1/4”-F03-F04-A2
	1/2”-3/4” (12mm-18mm)								Z-6800-MK-1/2”-F03-F04-A2

Please contact your local representative for ordering information on Lubricant Free Actuated Valves

Note: For dimensions of Actuators assembled on the H-6800 series please refer to the HPA section

H-6800 SERIES ORDERING INFORMATION

H 68 00 SS L 1/4 C S S

OPTIONAL

Valves Series

Valve Type	
00 -	LET-LOK® End Connection
10 -	Female End Connection
80	Male End Connection
85 -	Male to Female End Connection
90	Female to LET-LOK® End Connection
95 -	Male to LET-LOK® End Connection

Body and Ends Material*	
SS	- St.St. 316
B	- Brass

*For other materials, please consult Ham-Let

End Connection	
L	- LET-LOK® End
N	- Threaded NPT
G	- ISO parallel
R	- ISO Tapered
GL	- Metal Gasket Face seal
HL	- One-Lok Tube Fittings
NL	- NPT to LET-LOK®
LN	- LET-LOK® to NPT

Other end connections are available upon request.

End Connection Size	
1/16	3 MM
1/8	6 MM
1/4	8 MM
3/8	10 MM
1/2	12 MM
3/4	18 MM

Seat Material	
P	TFM®1600
C	PCTFE
A	PEEK

Valve Pattern Type	
S	Straight Port Valve
A	Angle Port Valve
T	3-Port Valve

Handle	
S	Black Nylon Handle
R	Red Nylon Handle
B	Blue Nylon Handle
Y	Yellow Nylon Handle
G	Green Nylon Handle
M	Metal (St.St.) Handle
M7	Metal (St.St.) Handle 70mm length*
ISLTS	ISLT Black
ISLTB	ISLT Blue
ISLTR	ISLT Red
ISLTY	ISLT Yellow
ISLTG	ISLT Green

*Extended Metal Handle for valves up to 3/8". Recommended for PCTFE and PEEK valves.

Actuator Type	
Select Per Table A	Aluminum Actuator*

*See Notes below

Treatment	
BLANK	- Standard Cleaning & Passivation
OC	- Oxygen Clean
LF	- Lubricant Free

For Actuated Valves

- If special cleaning is required, LF / OC will be added in the end and be applicable for the Valve only.
  For example: **H - 6800- SS - L- 1/4 - PS - A1 - OC**
- For ordering infomation of actuators for high temprature please refer to Ham-Let Pneumatic Actuator Catalog.
- For double mounting actuators, please contact your local representative.
- Actuators Accessories (Limit Switch, Solenoid Valve please refer to Ham-Let Pneumatic Actuator Catalog.
- For Stainless Steel Actuator or Electric Actuator please contact your local representative.

ORDERING INFORMATION FOR SPARE KITS

SEAL KIT

Seal Kit includes seats, stem packings, body seals and lable.

Z - 6800 - SK - 1/4 - A - 2 WAY

Kit Type	
SK	Seal Kit

Body Designator per End Connection	
1/4	1/16 to 3/8 3MM to 10MM
1/2	1/2 to 3/4 12MM to18MM

Seat Material	
P	TFM®1600
C	PCTFE
A	PEEK

Valve Pattern	
2 Way	For straight and angle Valves
3 Way	For T Port Valves

NOTE:
For Seal kits for "Old Design" valves, please contact a HAM-LET representative.

HANDLE KIT

Handle kit includes handle and set screw. To order a spare-parts kit, use the following format:

Z - 6800 - HK - 1/4 - S

Kit Type	
HK	Handle Kit

Body Designator per End Connection	
1/4	1/16 to 3/8 3MM to 10MM
1/2	1/2 to 3/4 12MM to18MM

Handle Type	
S	Black Nylon Handle
R	Red Nylon Handle
B	Blue Nylon Handle
Y	Yellow Nylon Handle
G	Green Nylon Handle
M	Metal (St.St.) Handle
M7	Metal St.St Handle 70 mm
ISLTS	ISLT Black
ISLTB	ISLT Blue
ISLTR	ISLT Red
ISLTY	ISLT Yellow
ISLTG	ISLT Green

Warning! For your safety
The system designer and user have the sole responsibility for selecting products suitable for their special application requirements, ensuring their safe and trouble-free installation, operation, and maintenance. Application details, material compatibility and product ratings should all be considered for each selected product. Improper selection, installation or use of products can cause property damage or personal injury.

TFM® - TM DuPont
H-6800, Rev.09, July 2011

COMPACT ONE-PIECE BALL VALVES

H-800 SERIES

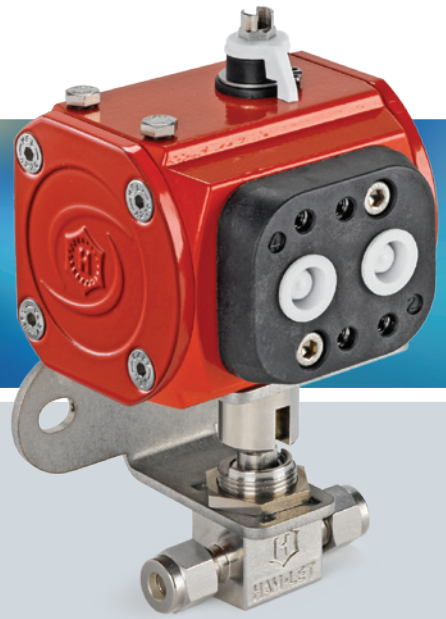

HAM-LET®
ADVANCED CONTROL TECHNOLOGY

H-800 FEATURES

- On/off-service, one-piece Ball Valve with 2-way pattern
- Encapsulated Ball Stem design
- Diverter and on/off–service, one-piece Ball Valve with 3-way pattern
- Stainless Steel construction
- Allows bidirectional flow in 2-way straight pattern
- Has virtually no dead space
- One-piece Ball Stem ensures alignment of stem and orifice
- MAWP 3000 psi (206 bar)
- MAWT 300ºF (149ºC)
- Panel mountable
- Vent options
- Variable end connection types and sizes from 1/16” to 1/2”, 3mm to 12mm
- Operation with colored Nylon handles, metal handle and pneumatically actuated

H-800 GENERAL

The H-800, one-piece Ball Valve series is designed for general service and instrumentation panels. Valve design enables low and high working pressure and accommodates a wide temperature range with high life cycle.
One-piece body design reduces possibility of shell leakage. The valves offer tight shutoff, long-life service and low operating torque.

HAM-LET H-800 Ball Valves are designed for fully open or fully closed operation only.
After a period of non-operation, valve’s braking torque may rise.

MATERIALS OF CONSTRUCTION

No.	Components	Qty	Material
1	Handle	1	Nylon + Glass Fiber
2	Set Screw	1	St.St.304
3	Panel Nut	1	St.St.304
4	Packing Bolt	1	St.St.316
5	Gland	1	St.St.304
6	Stem Packing	1	Virgin PTFE
7	Washer	1	St.St.304
8	Ball Stem	1	St.St.316
9	Seat Disc	2	St.St.304 (PTFE coated)
10	Seat	1	PFA
11	Seat Ring	2	St.St.304 (PTFE coated)
12	Body	1	St.St. ASTM A351 Gr. CF8M

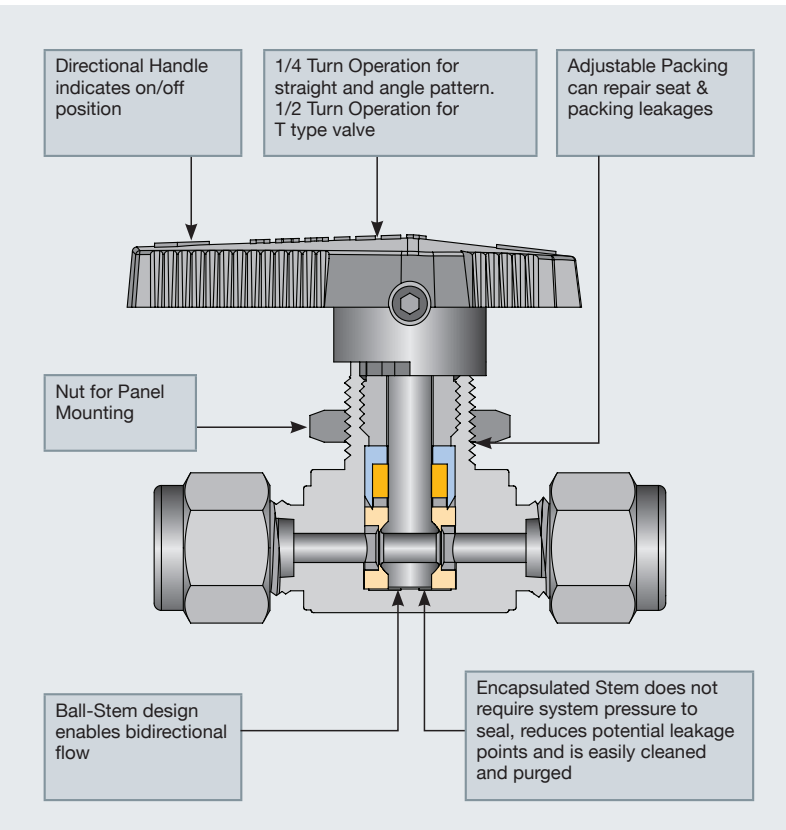

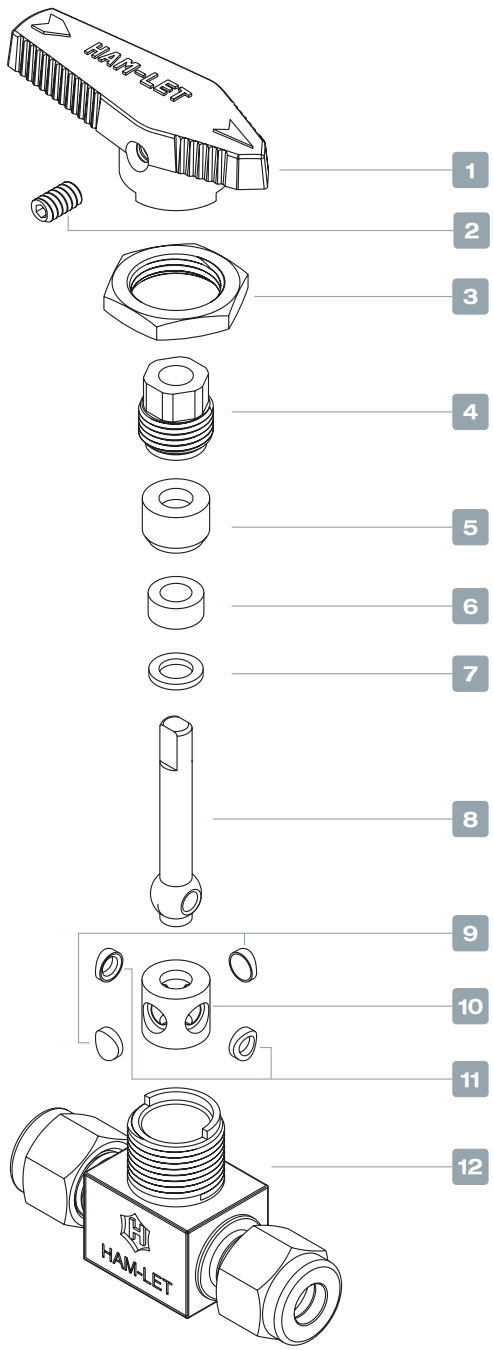

TESTING

HAM-LET H-800 design has been tested for Burst and Proof. Standard testing for each H-800 valve includes testing with nitrogen at 1000psig. Each valve is tested for leakage through the shell, packing and ball seats.
The maximum allowable leakage across the ball seat is 0.1 std cc/min.

CLEANING & PACKAGING

The H-800 One Piece Ball Valve is treated with HAM-LET "Passivation Cleaning and Packaging (Procedure 8075)".
HAM-LET Cleaning and packaging (procedures 8075 and 8055) are available for reference on HAM-LET website.

PACKING ADJUSTMENT

Due to the varied service applications of the valve, packing adjustment may be occasionally necessary.

Packing adjustment for this valve can fix not only leakage through stem but also leakage through the seats.

Packing is factory adjusted to 1000 psig service. Initial adjustment is recommended after installation and prior to start-up.
HAM-LET Ball Valves are designed for operation in fully closed or fully open position only.

PRESSURE TEMPERATURE RATING

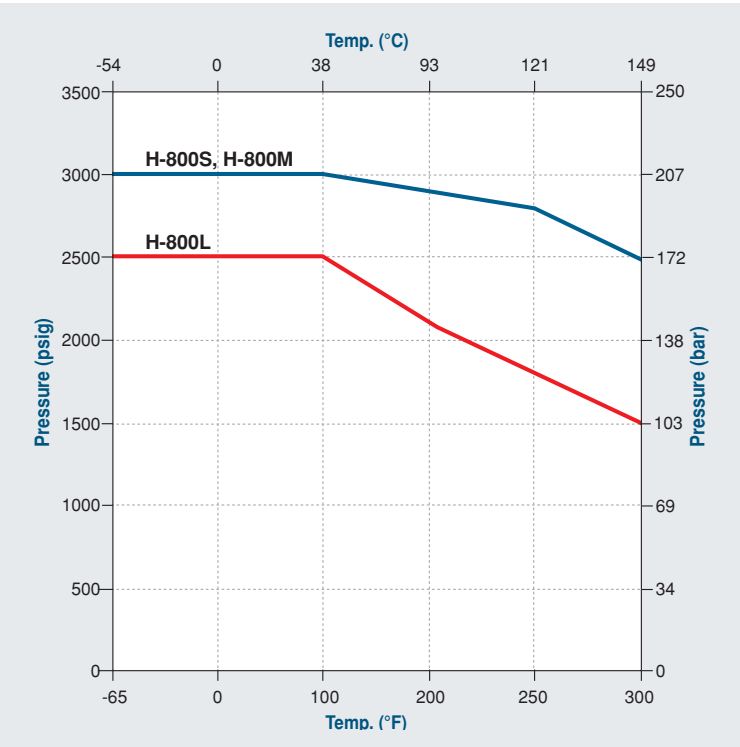

H-800 COLORED AND METAL HANDLES

MANUAL OPERATION

S - Black Handle*
B - Blue Handle
R - Red Handle
G - Green Handle
Y - Yellow Handle
M- Metal Handle
* Black Nylon handle is standard.

FLOW DIRECTION

H-800 Angle-Type

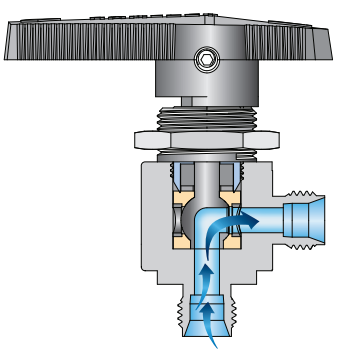

NOTE: Bottom Entry Only

H-800 T-Type

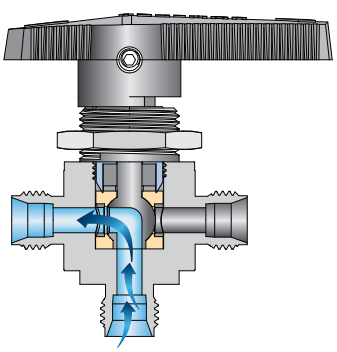

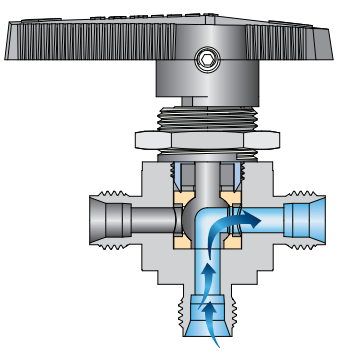

NOTE: Bottom Entry Only

STRAIGHT PORT VALVE & ANGLE PATTERN

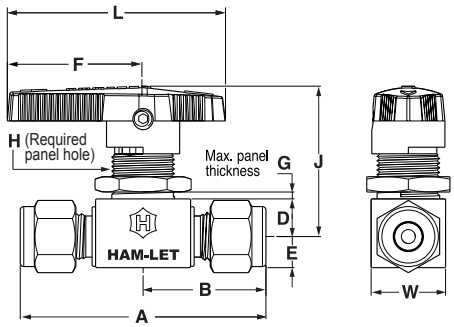

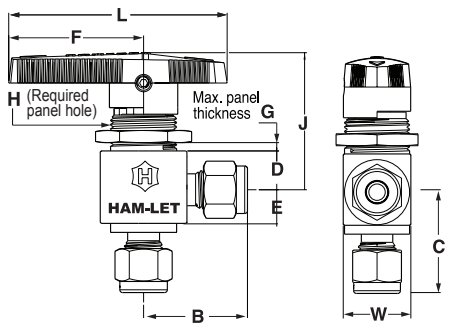

STANDARD CONFIGURATION DIMENSIONS

End connection Type	Size	Body Size Designator	Orifice mm	Orifice inch	CV straight	CV angle	A mm	A inch	B mm	B inch	C (Angle) mm	C (Angle) inch	D mm	D inch	E mm	E inch	F mm	F inch	L mm	L inch	G mm	G inch	H (Diameter) mm	H (Diameter) inch	J mm	J inch	W mm	W inch
Let-Lok Imperial	1/16	S	1.3	0.051	0.1	-	42.7	1.68	21.35	0.84	20.6	0.81	8.6	0.34	7.1	0.28	31.0	1.22	50	1.97	6.4	0.25	15.1	0.59	34.5	1.36	17	0.67
	1/8		2.4	0.094	0.2	0.15	51.1	2.01	25.70	1.01	24.6	0.97																
	1/4		3.2	0.126	0.6	0.35	56.1	2.21	28.05	1.10	27.2	1.07																
		M	4.8	0.189	1.4	0.9	60.7	2.39	30.50	1.20	29.7	1.17	11.2	0.44	9.7	0.38	38.9	1.53	63	2.48	4.8	0.19	19.8	0.78	37.3	1.47	19.8	0.78
	3/8				1.5	0.9	65.5	2.58	32.75	1.29	32.8	1.29																
		L	7.1	0.279	6	2	77.5	3.05	38.60	1.52	36.3	1.43	14.2	0.56	14.2	0.56	50.8	2	82.3	3.24	9.5	0.38	28.6	1.13	52.6	2.07	28.4	1.12
	1/2	L			12	4.6	83.12	3.27	41.56	1.63	39.16	1.54	14.2	0.56	14.2	0.56	50.8	2	82.3	3.24	9.5	0.38	28.6	1.13	52.6	2.07	28.4	1.12
Let-Lok Metric	3mm	S	2.4	0.094	0.2	0.15	51.1	2.01	25.70	1.01	24.6	0.97	8.6	0.34	7.1	0.28	31.0	1.22	50	1.97	6.4	0.25	15.1	0.59	34.5	1.36	17	0.67
	6mm		3.2	0.126	0.6	0.35	56.1	2.21	28.05	1.10	27.2	1.07																
		M	4.8	0.189	1.4	0.9	60.7	2.39	30.35	1.20	29.7	1.17	11.2	0.44	9.7	0.38	38.9	1.53	63	2.48	4.8	0.19	19.8	0.78	37.3	1.47	19.8	0.78
	8mm				1.5	0.9	62.5	2.46	31.25	1.23	30.5	1.2																
	10mm	L	7.1	0.279	6	2	78.0	3.07	38.90	1.53	36.3	1.43	14.2	0.56	14.2	0.56	50.8	2	82.3	3.24	9.5	0.38	28.6	1.13	52.6	2.07	28.4	1.12
	12mm	L			12	4.6	83.12	3.27	41.56	1.63	39.16	1.54	14.2	0.56	14.2	0.56	50.8	2	82.3	3.24	9.5	0.38	28.6	1.13	52.6	2.07	28.4	1.12
F-NPT	1/8	S	3.2	0.126	0.5	0.3	41.4	1.63	20.60	0.81	20.6	0.81	8.6	0.34	7.1	0.28	31.0	1.22	50	1.97	6.4	0.25	15.1	0.59	34.5	1.36	17	0.67
		M	4.8	0.189	1.2	0.7	50.8	2.00	25.40	1.00	25.4	1.00	11.2	0.44	9.7	0.38	38.9	1.53	63	2.48	4.8	0.19	19.8	0.78	37.3	1.47	19.8	0.78
	1/4				0.9	0.75	52.3	2.06	26.20	1.03	26.2	1.03	11.2	0.44	9.7	0.38	38.9	1.53	63	2.48	4.8	0.19	19.8	0.78			19.8	0.78
		L	7.1	0.279	3	1.7	63.5	2.50	31.75	1.25	31.75	1.25	14.2	0.56	14.2	0.56	50.8	2	82.3	3.24	9.5	0.38	28.6	1.13	52.6	2.07	28.4	1.12
	3/8				2.6	1.5	63.5	2.50	31.75	1.25	31.75	1.25	14.2	0.56	14.2	0.56	50.8	2	82.3	3.24	9.5	0.38	28.6	1.13	52.6	2.07	28.4	1.12
M-NPT	1/4	M	4.8	0.189	1.2	0.75	50.8	2.00	25.40	1.00	26.2	1.03	11.2	0.44	9.7	0.38	38.9	1.53	63	2.48	4.8	0.19	19.8	0.78	37.3	1.47	19.8	0.78
M-NPT to Let-Lok	1/4				1.6	0.75	55.9	2.20	30.5	1.20	26.2																	
Female ISO 7-1 tapered	1/4				0.9	-	52.3	2.06	26.15	1.03	26.15																	
	3/8	L	7.1	0.279	2.6	-	63.5	2.50	31.75	1.25	31.75	1.25	14.2	0.56	14.2	0.56	50.8	2	82.3	3.24	9.5	0.38	28.6	1.13	52.6	2.07	28.4	1.12
O-Ring Face Seal	1/4	S	3.2	0.126	0.6	0.35	44.4	1.75	22.40	0.88	23.9	0.94	11.2	0.44	9.7	0.38	31.0	1.22	50	1.97	3.2	0.13	15.1	0.59	34.5	1.36	19.8	0.78
		M	4.8	0.189	2.4	0.9	47.8	1.88	23.90	0.94			11.2	0.44			38.9	1.53	63	2.48	4.8	0.19	19.8	0.78	37.3	1.47	19.8	0.78
Face Seal Male	1/4	S	3.2	0.126	0.6	0.35	54.1	2.13	27.05	1.06	27.7	1.09	11.2	0.44			31.0	1.22	50	1.97	3.2	0.13	15.1	0.59	34.5	1.36	19.8	0.78
		M	4.8	0.189	2.4	0.9							11.2	0.44			38.9	1.53	63	2.48	4.8	0.19	19.8	0.78	37.3	1.47	19.8	0.78
	1/2	L	7.1	0.279	6	-	73.2	2.88	36.60	1.44	-	-	14.2	0.56	14.2	0.56	50.8	2	82.3	3.24	9.5	0.38	28.6	1.13	52.6	2.07	38.1	1.5

Dimensions are for reference only, and are subject to change.

3-WAY VALVE

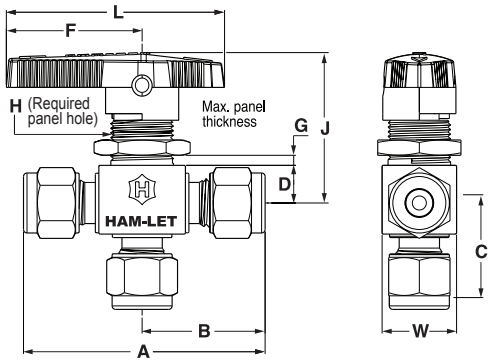

STANDARD CONFIGURATION DIMENSIONS

End connection Type	Size	Body Size Designator	Orifice mm	Orifice inch	CV	A mm	A inch	B mm	B inch	C mm	C inch	D mm	D inch	F mm	F inch	L mm	L inch	G mm	G inch	H (Diameter) mm	H (Diameter) inch	J mm	J inch	W mm	W inch
Let-Lok Imperial	1/16	S	1.3	0.051	0.08	42.7	1.68	21.35	0.84	20.6	0.81	8.6	0.34	31.0	1.22	50	1.97	6.4	0.25	15.1	0.59	34.5	1.36	17	0.67
	1/8	S	2.4	0.094	0.15	51.1	2.01	25.70	1.01	24.6	0.97														
	1/4	S	3.2	0.126	0.35	56.1	2.21	28.05	1.10	27.2	1.07														
	1/4	M	4.8	0.189	0.9	60.7	2.39	30.50	1.20	29.7	1.17	11.2	0.44	38.9	1.53	63	2.48	4.8	0.19	19.8	0.78	37.3	1.47	19.8	0.78
	3/8	M				65.5	2.58	32.75	1.29	33.0	1.3														
		L	7.1	0.279	2	73.4	2.89	36.80	1.45	36.3	1.43	14.2	0.56	50.8	2	82.3	3.24	9.5	0.38	28.6	1.13	52.6	2.07	28.4	1.12
	1/2	L			4.6	79.0	3.11	39.5	1.55	39.1	1.54	14.2	0.56	50.8	2.0	82.3	3.24	9.5	0.38	28.6	1.13	52.6	2.07	28.4	1.12
Let-Lok Metric	3mm	S	2.4	0.094	0.15	51.1	2.01	25.70	1.01	24.6	0.97	8.6	0.34	31.0	1.22	50	1.97	6.4	0.25	15.1	0.59	34.5	1.36	17	0.67
	6mm	S	3.2	0.126	0.35	56.1	2.21	27.90	1.10	27.2	1.07														
	6mm	M	4.8	0.189	0.9	60.7	2.39	30.50	1.20	29.7	1.17	11.2	0.44	38.9	1.53	63	2.48	4.8	0.19	19.8	0.78	37.3	1.47	19.8	0.78
	8mm	M			0.8	62.5	2.46	31.25	1.23	30.5	1.2														
	10mm	L	7.1	0.279	2	73.4	2.89	36.80	1.45	36.3	1.43	14.2	0.56	50.8	2	82.3	3.24	9.5	0.38	28.6	1.13	52.6	2.07	28.4	1.12
	12mm	L			4.6	79.0	3.11	39.5	1.55	39.1	1.54	14.2	0.56	50.8	2.0	82.3	3.24	9.5	0.38	28.6	1.13	52.6	2.07	28.4	1.12
F-NPT	1/8	S	3.2	0.126	0.3	41.4	1.63	20.60	0.81	20.6	0.81	8.6	0.34	31.0	1.22	50	1.97	6.4	0.25	15.1	0.59	34.5	1.36	17	0.67
	1/4	M	4.8	0.189	0.75	52.3	2.06	26.20	1.03	26.2	1.03	11.2	0.44	38.9	1.53	63	2.48	4.8	0.19	19.8	0.78	37.3	1.47	19.8	0.78
	1/4	L	7.1	0.279	1.7	63.5	2.50	31.75	1.25	31.75	1.25	14.2	0.56	50.8	2	82.3	3.24	9.5	0.38	28.6	1.13	52.6	2.07	28.4	1.12
	3/8	L			1.5	63.5	2.50	31.75	1.25	31.75	1.25	14.2	0.56	50.8	2	82.3	3.24	9.5	0.38	28.6	1.13	52.6	2.07	28.4	1.12
M-NPT to Let-Lok	1/4	M	4.8	0.189	0.8	60.7	2.39	30.50	1.20	26.2	1.03	11.2	0.44	38.9	1.53	63	2.48	4.8	0.19	19.8	0.78	37.3	1.47	19.8	0.78
Female ISO 7-1 tapered	1/4	M			0.75	52.3	2.06	26.15	1.03	26.15															
	3/8	L	7.1	0.279	1.5	63.5	2.50	31.75	1.25	31.75	1.25	14.2	0.56	50.8	2	82.3	3.24	9.5	0.38	28.6	1.13	52.6	2.07	28.4	1.12
Face Seal Male	1/4	S	3.2	0.126	0.35	54.1	2.13	27.05	1.06	27.7	1.09	11.2	0.44	31.0	1.22	50	1.97	3.2	0.13	15.1	0.59	34.5	1.36	19.8	0.78
	1/4	M	4.8	0.189	0.9							11.2	0.44	38.9	1.53	63	2.48	4.8	0.19	19.8	0.78	37.3	1.47	19.8	0.78

Dimensions are for reference only, and are subject to change.

H-800 - PNEUMATIC ACTUATED VALVES

FEATURES

- 90° Actuation for 2-way valves (Straight & Angle)
- 180° Actuation for T-type valves
- Actuators comply with industry standards for interface with ISO 5211, NAMUR and VDI/VDE 3845
- Actuated valves are available factory assembled or separately, actuator and mounting kits
- Limit switches, proximity sensors, position indicators, pilot valves, and other accessories are available upon request
- Standard Temperature range: -32°C to 90°C (-25.6°F to 194°F)
  Optional: High Temperature, Low Temperature

GENERAL

Four standard actuator sizes are available upon request:
Mini (designator "**A1**"), Small (designator "**A2**"), Medium (designator "**A3**"), Large (designator "**A4**") and 180° actuator (designator **"A2T"**).
Improved operational speed enables better valve opening and closing control.
ATEX certification of Valves-Actuators assemblies are available on request at the time of order quotation.

MATERIAL OF CONSTRUCTION

No.	Part	Qty	Material
1	Actuator	1	AL 356-T5
2	Coupling	1	St.St.316
3	Bracket	1	St.St.304
4	Washer Flat	4	St.St.304
5	Washer Spring	4	St.St.304
5	Screw	4	St.St.304
6	Panel Nut	1	St.St.316
7	H-800	1	St.St.316

180° Actuator on T-type valve

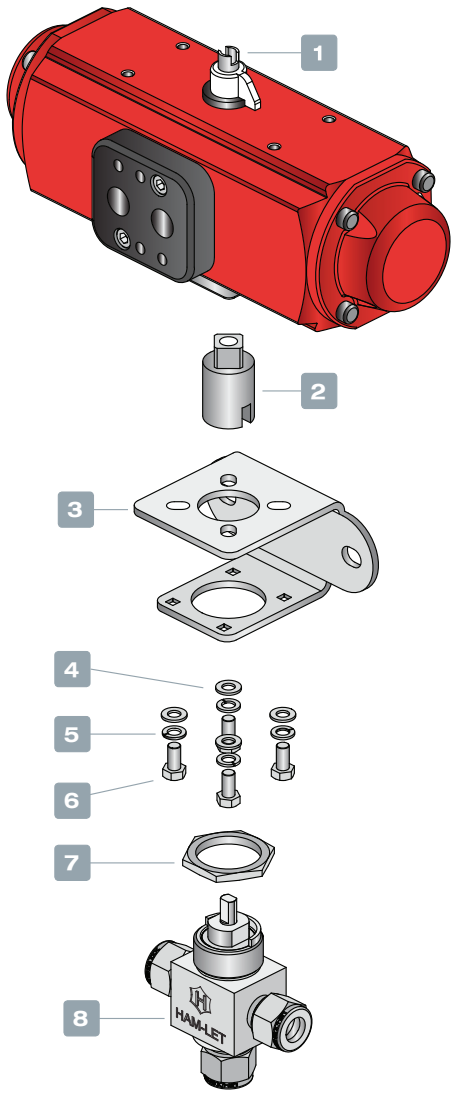

90° Actuator on 2-way valve

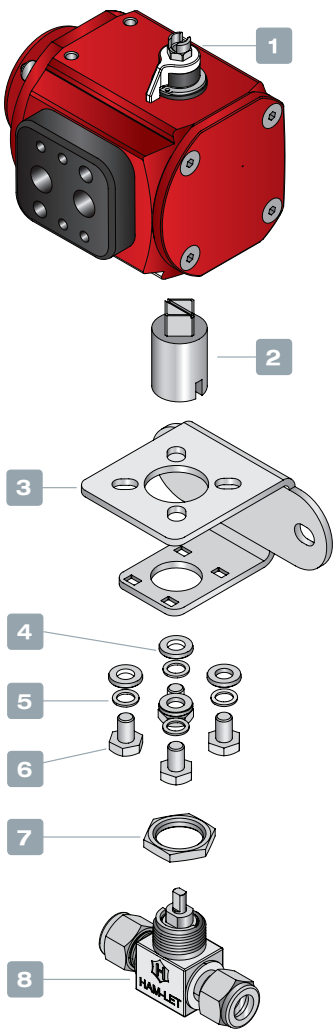

ACTUATED H-800 SERIES

Selection of Valve-Actuator assemblies provided herein is based on:

- Valve maximum allowable working pressure
- Ambient temperature (50 to 100°F / 10 to 37°C)
- Actuator fits to valve based on operating pressure of 6 bar, as per table.

To order H-800 ball valve factory assembled with an actuator, the actuator designator shall be added to the valve part number / description per the below table. For example:

H-800S-SS-L-1/4 with standard Spring Return Aluminum Actuator Normally Closed

H-800S-SS-L-1/4-A1C

To order an actuator and mounting bracket kit for field assembly: Spring Return Actuator ordering number: **Z-A1S** Corresponding mounting bracket kit: **Z-800S-MK-F03-F04-A1**

Tabel A: Ordering information for Actuated Valves

Series	Ends Size	Seats	Minimum Actuator Operating Pressure Bar (Psi)	Actuator Designators (Factory Assembled)			Actuator Ordering Code		Mounting Kit Ordering info
				Spring Return		Double Acting	Spring Return	Double Acting	
				NO	NC				
H-800	S	PFA	5 (72.5)	A1O	A1C	A1	Z-A1S	Z-A1	Z-800S-MK-F03-F04-A1
	M			A1O	A1C		Z-A1S		Z-800M-MK-F03-F04-A1
	L			A2O	A2C		Z-A2S		SR: Z-800L-MK-F03-F04-A2 DA: Z-800L-MK-F03-F04-A1
H-800 T-Type	S	PFA	5 (72.5)	A2TS	A2TS	A2T	Z-A2TS	Z-A2T	Z-800S-MK-F03-F04-A2
	M								Z-800M-MK-F03-F04-A2
	L								Z-800L-MK-F03-F04-A2

Note: For dimensions of Actuators assembled on the H-800 series please refer to the HPA section

H-800 SERIES ORDERING INFORMATION

H-8 00 S - SS L - 1/4 - S - [ ] - [ ] - [ ] - [ ]

OPTIONAL

Valve Series

Valve Type

00 -	LET-LOK® Ends
10 -	Female Ends
80 -	Male Ends
85 -	Male to Female Ends

Body Designator

S	- Small
M	- Medium
L	- Large

End Connection Type

L	- LET-LOK®
N	- NPT
G	- ISO parallel
R	- ISO Tapered
GL	- Metal Face seal
HL	- One Lok

Body and Ends Meterial

SS	- St.St.316

End Connection Size

1/8	3 MM
1/4	6 MM
3/8	8 MM
1/2	10 MM
3/4	12 MM

Valve Pattern Type

BLANK	- Straight
A	- Angle
T	- 3-Port

Vent Option

DV	- Down Stream Vent

Handle

BLANK	Black Nylon Handle*
RH	Red Nylon Handle
BH	Blue Nylon Handle
YH	Yellow Nylon Handle
GH	Green Nylon Handle
M	Metal (St.St.) Handle

* Black Nylon handle is standard.

Actuator Type

Select Per Table A	Aluminum Actuator*

*See Notes below

Treatment

BLANK	- Standard Cleaning & Passivation
OC	- Oxygen Clean
LF	- Lubricant Free

For Actuated Valves

- If special cleaning is required, LF / OC will be added in the end, and be applicable for the Valve only.
  For example: **H - 800S - SS - L- 1/4 - A1 - OC**
- For ordering infomation of actuators for high temprature please refer to Ham-Let Pneumatic Actuator Catalog.
- For double mounting actuators, please contact your local representative.
- Actuators Accessories (Limit Switch, Solenoid Valve please refer to Ham-Let Pneumatic Actuator Catalog.
- For Stainless Steel Actuator or Electric Actuator please contact your local representative.

HANDLE KIT

Handle kit contains handle and set screw

Z-800 S - HK - S

H-800 Valve Series

Body Designator

S	Small
M	Medium
L	Large

Handle Kit

Handle Type

S	Black Nylon Handle
R	Red Nylon Handle
B	Blue Nylon Handle
Y	Yellow Nylon Handle
G	Green Nylon Handle
M	Metal (St.St.) Handle

* Black Nylon handle is standard.

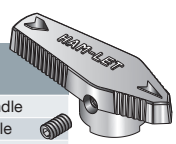

Warning! For your safety

The system designer and user have the sole responsibility for selecting products suitable for their special application requirements, ensuring their safe and trouble-free installation, operation, and maintenance. Application details, material compatibility and product ratings should all be considered for each selected product. Improper selection, installation or use of products can cause property damage or personal injury.

H-800, Rev.04, July 2011

THREE–PIECE BALL VALVES

H-500 SERIES

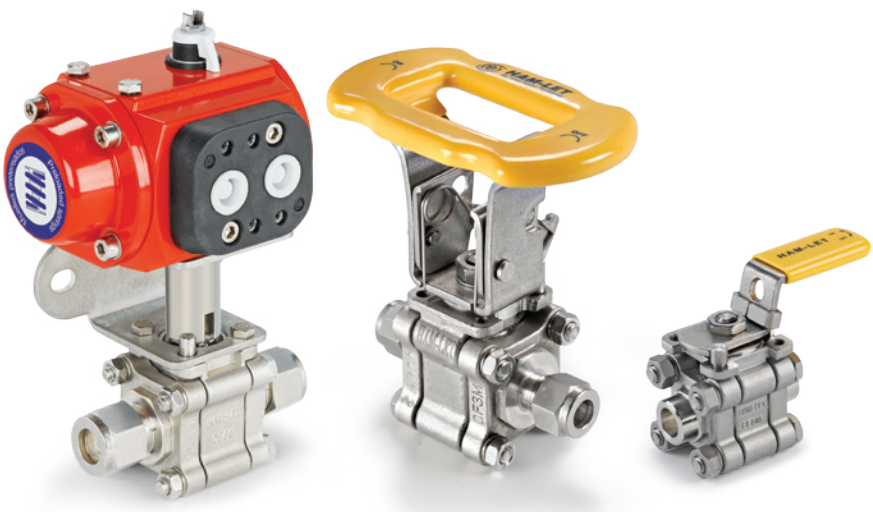

HAM-LET®
ADVANCED CONTROL TECHNOLOGY

H-500 FEATURES

3-piece heavy-duty ball valves with:

- Precision Investment cast body in CF8M stainless steel
- Precision Investment cast end caps in CF3M stainless steel
- Blow-out proof stem with Belleville washer design for long life stem sealing
- Manual Operation with integral locking device
- Flow coefficient (Cv) from 1.2 to 24.0
- MAWP 3000 psig (204 Bar)
- MAWT 450°F (232°C)
- H-500S is available with TFM1600 seat material as standard.

GENERAL

The H-500 Series is a moderate-pressure instrumentation Ball Valve for general service and instrumentation panels.
The valves offer large ports for high flow, tight shutoff, long-life service and low operating torque.
The H-500 Series can be used for bi-directional flow, is rated to max. 3000 psig (204 Bar) and performs on/off service.

MATERIALS OF CONSTRUCTION

No.	Components	Material	Qty
1	Handle	St.St. 304	1
2	Stem Nut	St.St. 304	2
3	Stem Washer	St.St. 316	1
4	Lock Saddle	St.St. 304	1
5	Belleville Washer	St.St. 304	2
6	Gland	St.St. 304	1
7	Stem Packing	MG1241 / PTFE	1
8	Stem Seal	MG1241	2
9	Stem	St.St. 316	1
10	Locking Device	St.St. 316	1
11	Handle Sleeve	Vinyl	1
12	Stop Pin	St.St. 304	1
13	Tightening Bolt	St.St. 304	4
14	End Cap	ASTM A351 Gr. CF3M	2
15	Joint Gasket	PTFE	2
16	Seat	PTFE	2
17	Body	ASTM A351 Gr. CF8M	1
18	Ball	St.St. 316	1
19	Washer	St.St. 316	4
20	Bolt Nut	St.St. 316	4

Note: If seat material other than PTFE is selected, Joint Gasket and Stem Packing are changed accordingly.

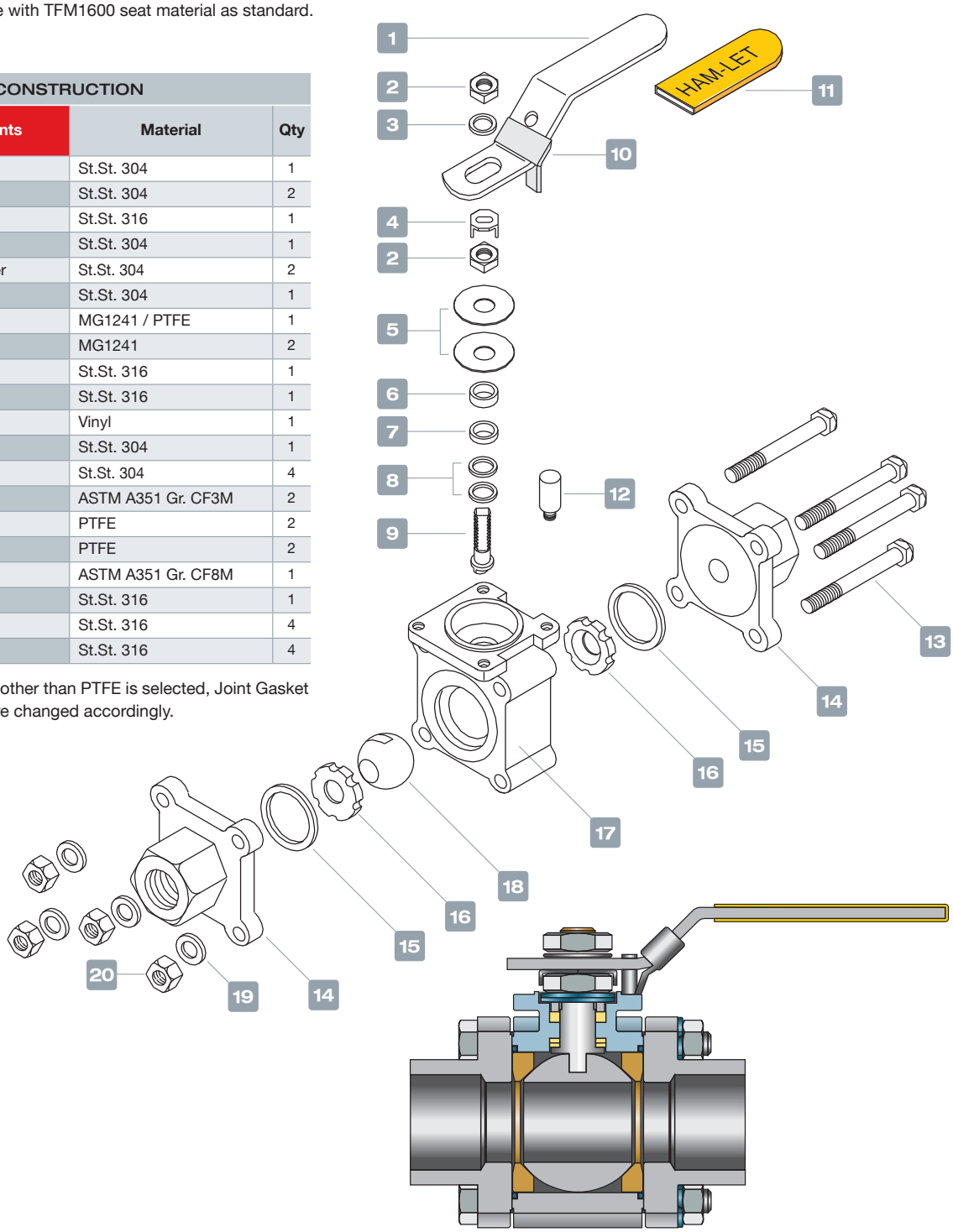

VIRGIN PTFE SEATS

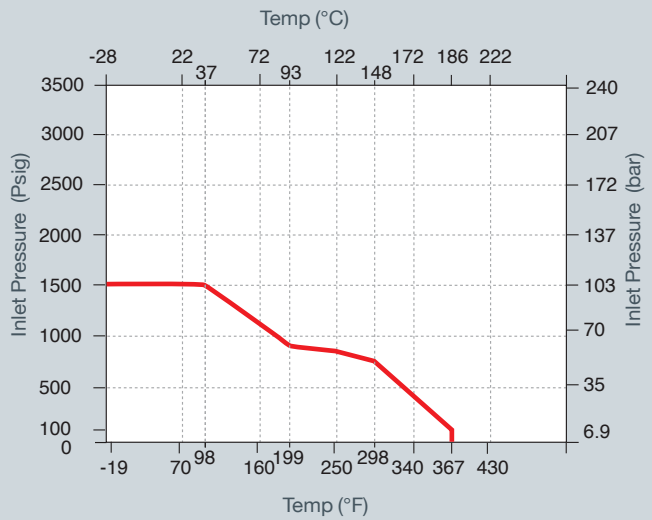

PTFE (Virgin Teflon®)
Color - White

A good all around, general-purpose seat material. PTFE has outstanding resistance to chemical attack by a broad range of organic chemicals, inorganic chemicals and solvents, and is generally considered chemically inert. PTFE is a self lubricating polymer with a very low coefficient of friction, which makes an excellent seat material

For all sizes

TFM®1600 - PTFE SEATS

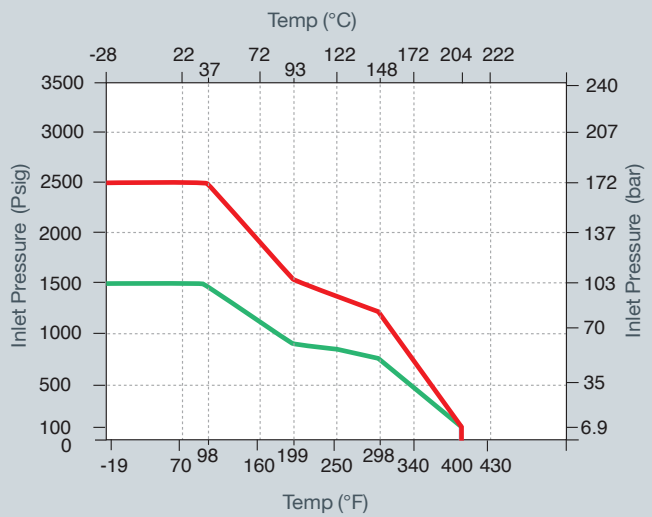

TFM®1600 - (PFA and PTFE composite)
Color - Bright White

Excellent seat material for purity applications, very low residual material during operation. It has lower deformation ratio than PTFE, but higher pressure and temperature rating than PTFE. Chemical resistance is equal to PTFE material.

1/4” to 1”
1-1/4” to 2”

PACKING ADJUSTMENT

Due to the varied service applications of the valve, packing adjustment may occasionally be necessary. Packing is factory adjusted to 1000 psig service. Initial packing adjustment is recommended after installation and prior to start-up. Please find more information on H-500 under Installation Instructions.

HAM-LET Ball Valves are designed for operation in the fully closed or fully open position.

TESTING

The H-500 Series Ball Valves design has been tested for Proof and Burst.
Every H500 Ball Valve is factory tested with nitrogen at 1000 psi (69 bar).
Maximum allowable leakage across seat is 0.1 std cc/min.

CLEANING & PACKAGING

HAM-LET H-500 Ball Valve is treated with HAM-LET Passivation Cleaning and Packaging (Procedure 8075).
Oxygen Cleaning and Packaging (Procedure 8055) is available as an option.

ST. ST. POWDER 50% FILLED PTFE SEATS

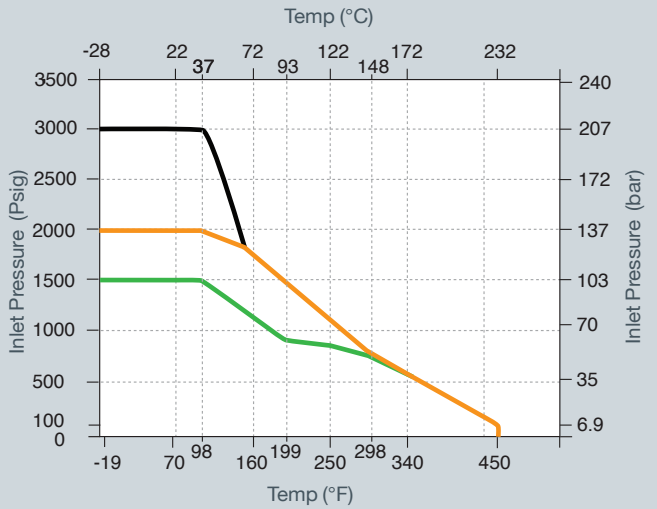

St. St. Powder Filled PTFE
Color - Gray

Excellent seat material for general applications to prevent over expansion and seat extrusion.
It has lower deformation ratio than PTFE, but higher pressure and temperature rating. Chemical resistance is equal to PTFE material.

- Up to 1/2”
- 3/4” to 1”
- 1-1/4” to 2”

PEEK SEATS

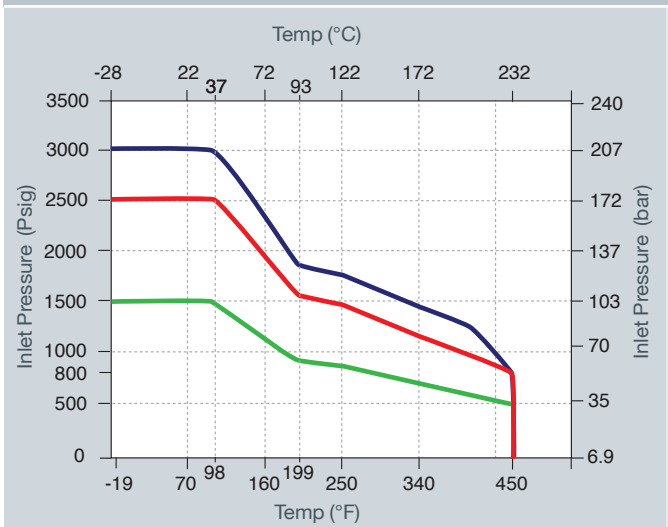

PEEK (Poly Ether Keton)
Color - Offwhite

Excellent seat material for high-pressure and high-temperature applications. Excellent chemical resistance.
Can be used countinuously to 450°F (232°C) and in hot water or steam without permanent loss in physical properties.
High strength for hostile environment and high pressure.

- Up to 1/2”
- 3/4” to 1”
- 1-1/4” to 2”

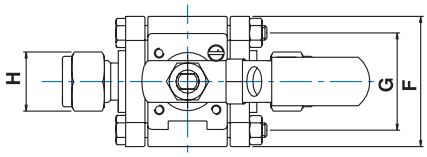

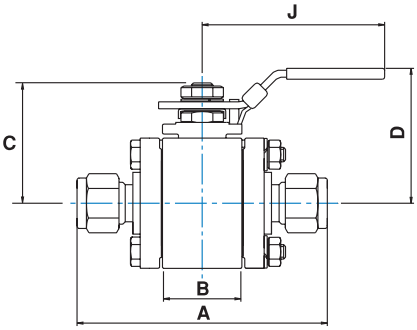

H-500 LET-LOK STANDARD CONFIGURATION DIMENSIONS

SERIES	VALVE SIZE		Orifice		Cv	Ball ID		A		B		F		C		D		H		J		G	
	mm	inch	mm	inch		mm	inch	mm	inch	mm	inch	mm	inch	mm	inch	mm	inch	mm	inch	mm	inch	mm	inch
H-500S	6	1/4”	4.8	0.19	1.2	4.8	0.19	80.5	3.17	15.1	0.59	38.5	1.52	33.2	1.31	48.0	1.89	14.3	0.56	61.0	2.40	25.5	1.00
	10	3/8”	7.1	0.28	3.7	7.1	0.28	80.5	3.17	15.1	0.59	38.5	1.52	33.2	1.31	48.0	1.89	17.5	0.69	61.0	2.40	25.5	1.00
H-500	12	1/2”	10.3	0.40	7.6	11.0	0.43	92.3	3.63	20.6	0.81	44.4	1.75	40.5	1.59	56.5	2.22	22.2	0.87	121.5	4.78	32.0	1.26
	20	3/4”	13.0	0.51	13.6	14.1	0.56	92.7	3.65	24.6	0.97	50.8	2.00	44.0	1.73	60.0	2.36	28.6	1.13	121.5	4.78	38.2	1.50
	25	1”	20.0	0.79	36.0	20.0	0.79	124.4	4.90	31.8	1.25	60.0	2.36	56.7	2.23	74.5	2.93	38.1	1.50	151	5.94	44.0	1.73

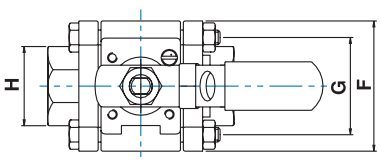

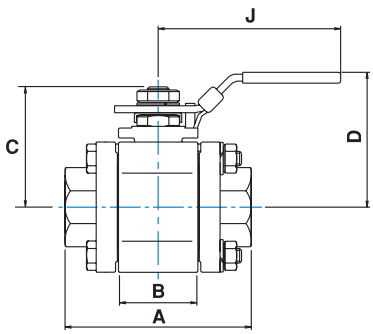

H-510 FEMALE NPT / BSPT STANDARD CONFIGURATION DIMENSIONS

SERIES	VALVE SIZE	Orifice		Cv	Ball ID		A		B		F		C		D		H		J		G	
		mm	inch		mm	inch	mm	inch	mm	inch	mm	inch	mm	inch	mm	inch	mm	inch	mm	inch	mm	inch
H-500S	1/4”	7.1	0.28	1.2	7.1	0.28	54.9	2.16	15.1	0.59	38.5	1.52	33.2	1.31	48.0	1.89	19.0	0.75	61.0	2.40	25.5	1.00
H-500	3/8”	11.0	0.43	10	11.0	0.43	70.0	2.76	20.6	0.81	44.4	1.75	40.5	1.59	56.5	2.22	27.0	1.06	121.5	4.78	32.0	1.26
	1/2”	11.0	0.43	10	11.0	0.43	70.0	2.76	20.6	0.81	44.4	1.75	40.5	1.59	56.5	2.22	27.0	1.06	121.5	4.78	32.0	1.26
	3/4”	14.1	0.56	12.0	14.1	0.56	74.0	2.91	24.6	0.97	50.8	2.00	44.0	1.73	60.0	2.36	33.0	1.30	121.5	4.78	38.2	1.50
	1”	20.0	0.79	36.0	20.0	0.79	99.0	3.90	31.8	1.25	60.0	2.36	56.7	2.23	74.5	2.93	42.0	1.65	151	5.94	44.0	1.73

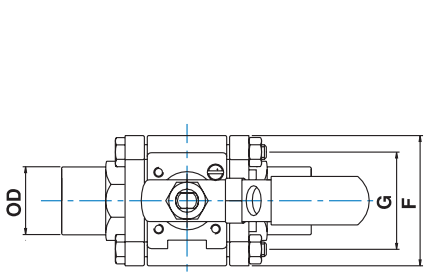

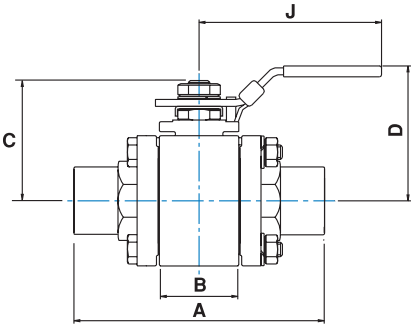

H-510 TUBE SOCKET WELD STANDARD CONFIGURATION DIMENSIONS

SERIES	VALVE SIZE		Orifice		Cv	Ball ID		A		B		F		C		D		OD		J		G	
	mm	inch	mm	inch		mm	inch	mm	inch	mm	inch	mm	inch	mm	inch	mm	inch	mm	inch	mm	inch	mm	inch
H-510S	6	1/4”	4.8	0.19	1.2	4.8	0.19	54.9	2.16	15.1	0.59	38.5	1.52	33.2	1.31	48.0	1.89	19.0	0.75	61.0	2.40	25.5	1.00
	10	3/8”	7.1	0.28	3.7	7.1	0.28	54.9	2.16	15.1	0.59	38.5	1.52	33.2	1.31	48.0	1.89	19.0	0.75	61.0	2.40	25.5	1.00
H-510	12	1/2”	10.3	0.40	7.5	11.0	0.43	70.0	2.76	20.6	0.81	44.4	1.75	40.5	1.59	56.5	2.22	20.5	0.81	121.5	4.78	32.0	1.26
	20	3/4”	14.1	0.56	12.0	14.1	0.56	74.0	2.91	24.6	0.97	50.8	2.00	44.0	1.73	60.0	2.362	27.0	1.06	121.5	4.78	38.2	1.50
	25	1”	22.35	0.88	38.0	22.35	0.88	99.0	3.90	31.8	1.25	60.0	2.36	56.7	2.23	74.5	2.93	34.0	1.34	151.0	5.94	44.0	1.73

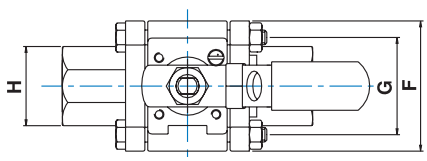

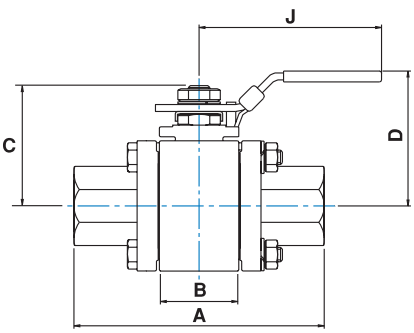

H-510 PIPE SOCKET WELD STANDARD CONFIGURATION DIMENSIONS

SERIES	VALVE SIZE	Orifice		Cv	Ball ID		A		B		F		C		D		H		J		G	
		mm	inch		mm	inch	mm	inch	mm	inch	mm	inch	mm	inch	mm	inch	mm	inch	mm	inch	mm	inch
H-500	1/4”	11.0	0.43	10	11.0	0.43	70.0	2.76	20.6	0.81	44.4	1.75	40.5	1.59	56.5	2.22	27.0	1.06	121.5	4.78	32.0	1.26
	3/8”	11.0	0.43	10	11.0	0.43	70.0	2.76	20.6	0.81	44.4	1.75	40.5	1.59	56.5	2.22	27.0	1.06	121.5	4.78	32.0	1.26
	1/2”	11.0	0.43	10	11.0	0.43	70.0	2.76	20.6	0.81	44.4	1.75	40.5	1.59	56.5	2.22	27.0	1.06	121.5	4.78	32.0	1.26
	3/4”	14.1	0.56	12.0	14.1	0.56	74.0	2.91	24.6	0.97	50.8	2.00	44.0	1.73	60.0	2.36	33.0	1.30	121.5	4.78	38.2	1.50
	1”	20.0	0.79	36.0	20.0	0.79	99.0	3.90	31.8	1.25	60.0	2.36	56.7	2.23	74.5	2.93	42.0	1.65	151	5.94	44.0	1.73

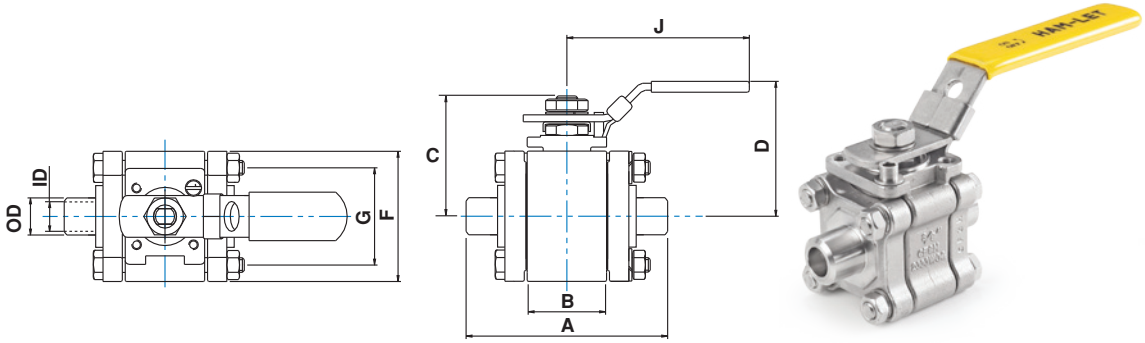

H-580 PIPE BUTTWELD STANDARD CONFIGURATION DIMENSIONS

SERIES	VALVE SIZE	Orifice		Cv	Ball ID		A		B		F		C		D		OD		ID		J		G	
		mm	inch		mm	inch	mm	inch	mm	inch	mm	inch	mm	inch	mm	inch	mm	inch	mm	inch	mm	inch	mm	inch
H-580S	1/4”	7.1	0.28	3.7	7.1	0.28	52.8	2.08	15.1	0.59	38.5	1.52	33.2	1.31	48.0	1.89	13.7	0.54	9.20	0.36	61.0	2.40	25.5	1.00
	3/8”	7.1	0.28	3.7	7.1	0.28	52.8	2.08	15.1	0.59	38.5	1.52	33.2	1.31	48.0	1.89	17.1	0.67	10.7	0.42	61.0	2.40	25.5	1.00
H-580	1/2”	11	0.43	10	11.0	0.43	67	2.64	20.6	0.81	44.4	1.75	40.5	1.59	56.5	2.22	21.3	0.84	15.8	0.62	121.5	4.78	32.0	1.26
	3/4”	14.1	0.56	12	14.1	0.56	72	2.83	24.6	0.97	50.8	2.00	44.0	1.73	60.0	2.36	27.1	1.07	21.0	0.83	121.5	4.78	38.2	1.50
	1”	20	0.79	36	20.0	0.79	97	3.82	31.8	1.25	60.0	2.36	56.7	2.23	74.5	2.93	34.1	1.34	26.6	1.05	151	5.94	44.0	1.73

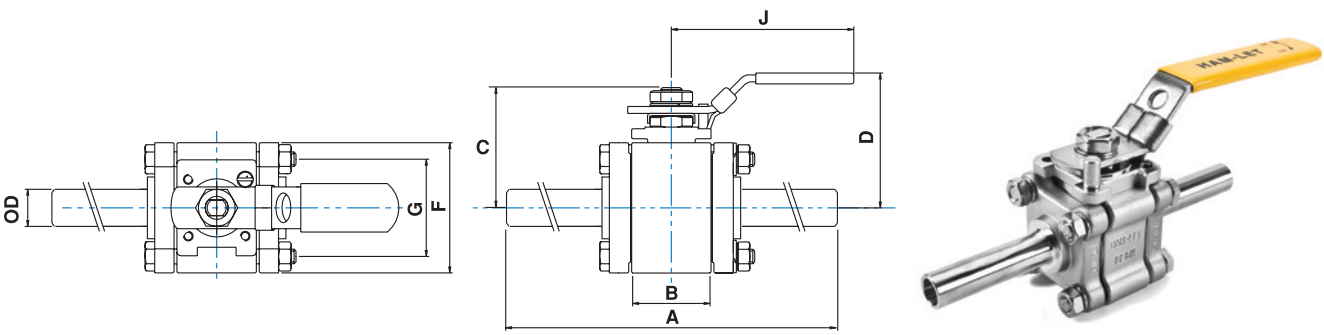

H-580 EXTENDED AND SHORT TUBE BUTTWELD STANDARD CONFIGURATION DIMENSIONS

SERIES	VALVE SIZE		Orifice		Cv	Ball ID		A extended		A short		B		F		C		D		OD		J		G	
	mm	inch	mm	inch		mm	inch	mm	inch	mm	inch	mm	inch	mm	inch	mm	inch	mm	inch	mm	inch	mm	inch	mm	inch
H-580	6	1/4”	4.4	0.17	1	9.4	0.37	-	-	71.5	2.81	20.6	0.81	44.4	1.75	40.5	1.59	56.5	2.22	6.4	0.25	121.5	4.78	32.0	1.26
	10	3/8”	7.7	0.3	3.8	9.4	0.37	-	-	71.5	2.81	20.6	0.81	44.4	1.75	40.5	1.59	56.5	2.22	9.57	0.38	121.5	4.78	32.0	1.26
	12	1/2”	9.4	0.37	7	9.4	0.37	140	5.5	-	-	20.6	0.81	44.4	1.75	40.5	1.59	56.5	2.22	12.7	0.5	121.5	4.78	32.0	1.26
	20	3/4”	15.75	0.62	18	15.8	0.87	150	5.9	-	-	24.6	0.97	50.8	2.00	44.0	1.73	60.0	2.36	19.05	0.75	121.5	4.78	38.2	1.50
	25	1”	22.1	0.87	38	22.35	0.88	161.2	6.35	-	-	31.8	1.25	60.0	2.36	56.7	2.23	74.5	2.93	25.4	1	151	5.94	44.0	1.73

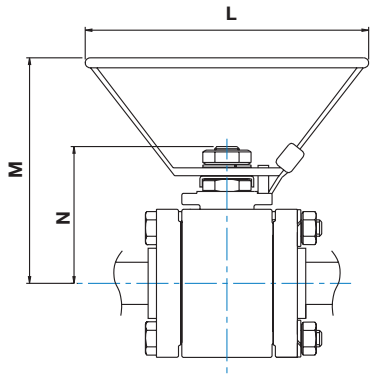

H-500 OVAL HANDLE

VALVE SIZE	N		L		M	
	mm	inch	mm	inch	mm	inch
1/4'', 3/8”, 1/2”	40.5	1.6	105.0	4.13	66	2.6
3/4”	44	1.73	105.0	4.13	70	2.75
1”	56.7	2.23	105.0	4.13	88.7	3.49

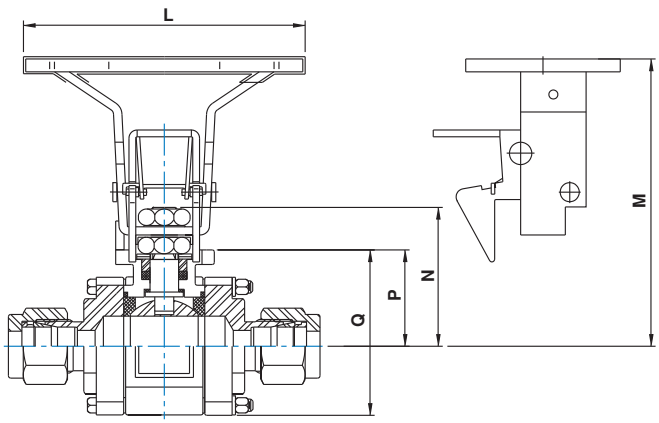

H-500 GRIP HANDLE (OVAL)

VALVE SIZE	L		M		N		P		Q	
	mm	inch	mm	inch	mm	inch	mm	inch	mm	inch
1/4"	104	4.09	94.5	3.72	40.5	1.59	27.5	1.08	49.5	1.95
3/8"	104	4.09	94.5	3.72	40.5	1.59	27.5	1.08	49.5	1.95
1/2"	104	4.09	94.5	3.72	40.5	1.59	27.5	1.08	49.5	1.95
3/4"	104	4.09	98	3.86	44	1.73	30.5	1.2	56	2.2

H-500 - PNEUMATIC ACTUATED VALVES

FEATURES

- 90° Actuation for 2-way valves
- Actuators comply with industry standards for interface with ISO 5211, NAMUR and VDI/VDE 3845
- Actuated valves are available factory assembled or seperately, actuator and mounting kits
- Limit switches, proximity sensors, position indicators, pilot valves and other accessories are available upon request
- Standard Temperature range: -32°C to 90°C (-25.6°F to 194°F)
  Optional: High Temperature, Low Temperature

GENERAL

Four standard actuator sizes are available upon request: Mini (designator "**A1**"), Small (designator "**A2**"), Medium (designator "**A3**"), and Large (designator "**A4**").
Improved operational speed enables better valve opening and closing control.
ATEX certification of Valves-Actuators' assemblies are available on request at the time of order quotation.

MATERIAL OF CONSTRUCTION

No.	Part	Qty	Material
1	Actuator	1	AL 356-T5
2	Coupling	1	St.St.316
3	Bracket	1	St.St.304
4	Washer Flat	4	St.St.304
5	Washer Spring	8	St.St.304
6	Screw	8	St.St.304
7	H500	1	St.St.316

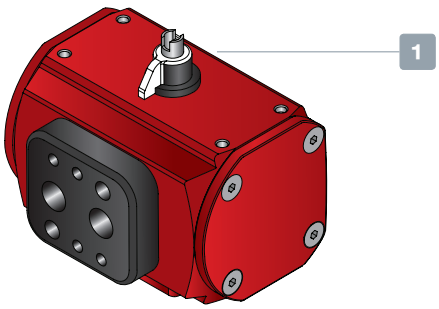

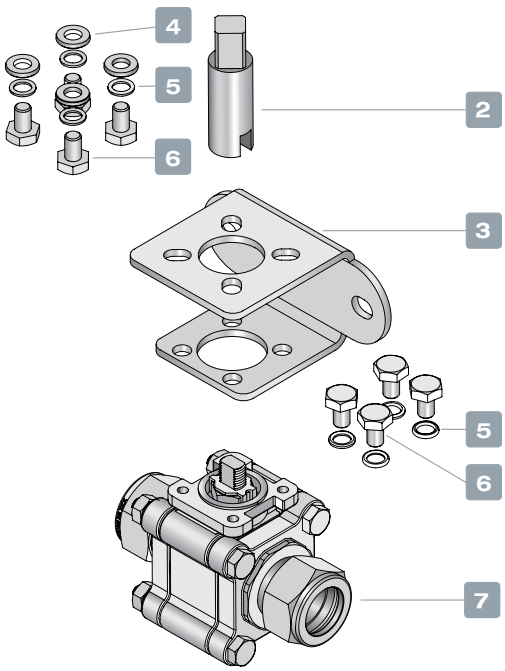

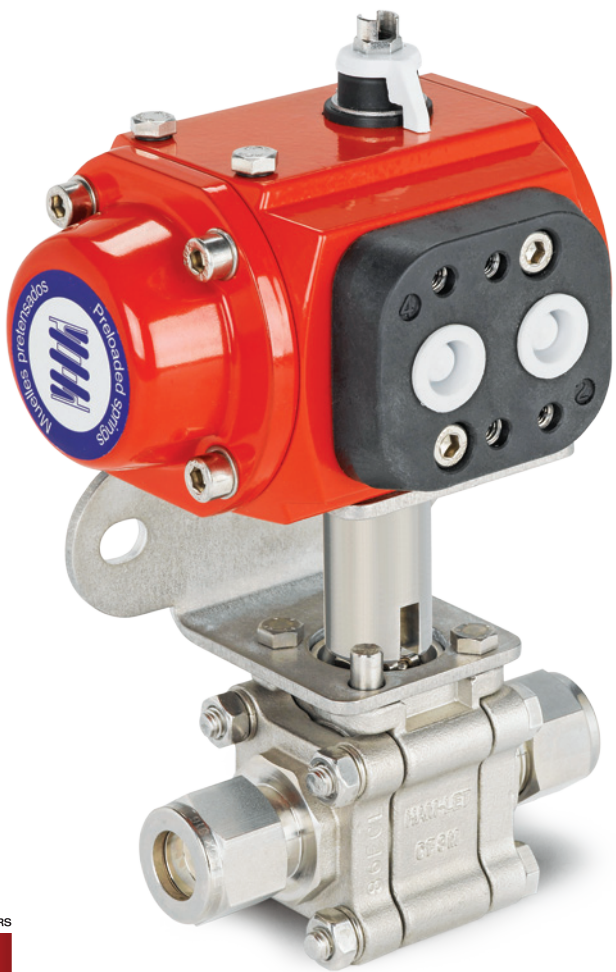

HAM-LET PNEUMATIC ACTUATORS

ACTUATED H-500 SERIES

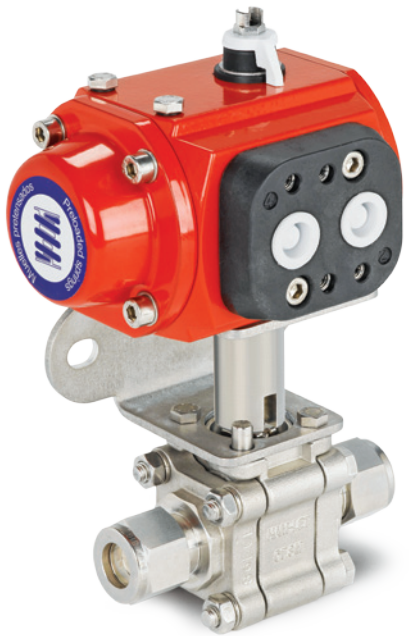

Selection of Valve-Actuator assemblies provided herein is based on:

- Valve maximum allowable working pressure
- Ambient temperature (50 to 100°F / 10 to 37°C)
- Actuator fits to valve based on operating pressure of 6 bar, as per table.

To order H-500 ball valve factory assembled with an actuator, the actuator designator shall be added to the valve part number/description per the below table. For example:
H-500-SS-L-3/4-T with standard Double Acting Aluminum Actuator
H-500-SS-L-3/4-T-A2
To order an actuator and mounting kit for field assembly:
Spring Return Actuator ordering number: **Z-A2**
Corresponding mounting kit: **Z-500-MK-3/4 -F03-F04-A2**

Please contact your local representative for ordering information on Lubricant Free Actuated Valves

Tabel A: Ordering information for Actuated Valves

Series	Ends Size	Seats	Minimum Actuator Operating Pressure Bar (Psi)	Actuator Designators (Factory Assembled)			Actuator Ordering Code		Mounting Kit Ordering Info
				Spring Return		Double Acting	Spring Return	Double Acting	
				NO	NC				
H-500S	1/4", 3/8" (6 mm, 10 mm)	TFM 1600	5 (72.5)	A1O	A1C	A1	Z-A1S	Z-A1	Z-500-MK-1/4"-F03-F04-A1
H-500	1/4"-1/2" (6 mm-12 mm)	PTFE TFM 1600	5 (72.5)	A2O	A2C	A1	Z-A2S	Z-A1	SR: Z-500-MK-1/2"-F03-F04-A2 DA: Z-500-MK-1/2"-F03-F04-A1
		St.St. PTFE	5 (72.5)	A2O	A2C	A2	Z-A2S	Z-A2	Z-500-MK-1/2"-F03-F04-A2
		PEEK	5 (72.5)	A4O	A4C	A3	Z-A4S	Z-A3	SR: Z-500-MK-1/2"-F05-F07-A4 DA: Z-500-MK-1/2"-F04-F05-A3
	3/4" (20 mm)	PTFE TFM 1600	5 (72.5)	A2O	A2C	A2	Z-A2S	Z-A2	Z-500-MK-3/4"-F03-F04-A2
		St.St. PTFE	5 (72.5)	A3O	A3C	A2	Z-A3S	Z-A2	SR: Z-500-MK-3/4"-F04-F05-A3 DA: Z-500-MK-3/4"-F03-F04-A2
		PEEK	5 (72.5)	A4O	A4C	A4	Z-A4S	Z-A4	Z-500-MK-3/4"-F05-F07-A4
	1" (25 mm)	PTFE TFM 1600 St.St. PTFE	5 (72.5)	A4O	A4C	A3	Z-A4S	Z-A3	SR: Z-500-MK-1"-F05-F07-A4 DA: Z-500-MK-1"-F04-F05-A3
		PEEK	5 (72.5)	A4O	A4C	A4	Z-A4S	Z-A4	Z-500-MK-1"-F05-F07-A4

Note: For dimensions of Actuators assembled on the H-500 series please refer to the HPA section

H-500 SERIES ORDERING INFORMATION

OPTIONAL

H-5 00 S - SS - L - 1/4 -

Valve Series

Valve Type

00 -	LET-LOK® ends
10 -	Female ends
80 -	Male ends
85 -	Male to Female ends
90 -	Female to LET-LOK® ends
95 -	Male to LET-LOK® ends

Valve Body Size

Blank	- Standard
S	- Small

Structure Material

SS	- St.St.316
End Cups	- ASTM A351 Gr. CF3M
Body	- ASTM A351 Gr. CF8M

End Connection Type

L	LET-LOK®
HL	ONE-LOK®
N	NPT
R	ISO Tapered
TSW	Tube socket weld
TBW	Tube buttweld
XTBW	Extended Tube buttweld
PSW	Pipe socket weld
PBW	Pipe buttweld sch 40

End Connection Size

1/4	6 MM
3/8	10 MM
1/2	12 MM
3/4	20 MM
1"	25 MM

Handle

BLANK	Lever Handle
OH	Oval Handle
GH	Grip Handle

* all Handles are with locking device standard

Actuator Type

Select Per Table A	Aluminum Actuator*

*See Notes below

Seat Material

BLANK	PTFE
T -	TFM®1600*
E -	St.St. Filled PTFE
PK-	PEEK
U -	UHMPE

*Standard for H-500S

Treatment

BLANK	- Standard Cleaning & Passivation
OC	- Oxygen Clean
LF	- Lubricant Free

For Actuated Valves

- If special cleaning is required, LF / OC will be added in the end, and will refer to the Valve only.
  For example: **H - 500- SS - L- 3/4 - T - A2 - OC**
- For ordering infomation of actuators for high temprature please refer to Ham-Let Pneumatic Actuator Catalog.
- For double mounting actuators, please contact your local representative.
- Actuators Accessories (Limit Switch, Solenoid Valve please refer to Ham-Let Pneumatic Actuator Catalog.
- For Stainless Steel Actuator or Electric Actuator please contact your local representative.

ORDERING INFORMATION FOR SEAL KITS

The kit includes gaskets, seats, stem packing and stem seal.

Z - 500 – SK – 1/4 – P

Body Designator per End Connections

1/2	For 1/4, 1/2, 3/8, 6MM, 10MM, 12MM
3/4	For 3/4, 20MM
1"	For 1", 25MM

Seal Material

P -	PTFE
T -	TFM®1600
E -	St.St. Filled PTFE
PK-	PEEK
U -	UHMPE

ORDERING INFORMATION FOR HANDLE KITS

Z - 500 – HK – 1/4 – LH

Body Designator per End Connections

1/2	For 1/4, 1/2, 3/8, 6MM, 10MM, 12MM
3/4	For 3/4, 20MM
1"	For 1", 25MM

Handle

LH	Lever Handle
OH	Oval Handle
GH	Grip Handle

* all Handles are with locking device standard

Warning! For your safety
The system designer and user have the sole responsibility for selecting products suitable for their special application requirements, ensuring their safe and trouble-free installation, operation, and maintenance. Application details, material compatibility and product ratings should all be considered for each selected product. Improper selection, installation or use of products can cause property damage or personal injury.

TFM® - TM DuPont, Teflon® - TM DuPont

H-500, Rev.08, July 2011

TWO-PIECE BALL VALVES

H-700 SERIES

HAM-LET®
ADVANCED CONTROL TECHNOLOGY

FEATURES

- Blow-out Proof Stem
- Stainless Steel Constructions
- Locking Handle in On and Off positions
- MAWP 2000 psi (135 Bar)
- MAWT 400ºF (204ºC)
- Flow coefficient (Cv) 1.25 to 17.35
- Size range: 1/4” to 1” or 6mm to 25mm

GENERAL

The H-700 Series is a moderate-pressure ball valve for general service. These valves are compact in size and structure.
They have relatively large ports for high flow, tight shutoff, long-life service, and low operating torque.
The H-700 Series can be used for bi-directional flow in fully open or fully closed position only.
The series is rated to max. 2000 psig (135 bar) and performs on/off service.

MATERIALS OF CONSTRUCTION

No.	Components	Qty	Material
1	Nut	1	St.St.304
2	Spring Washer	1	St.St.304
3	Handle	1	St.St.304
4	Locking Device	1	St.St.304
5	Belleville Washer	1	St.St.304
6	Flat Washer	1	St.St.304
7	Stem Packing	1	PTFE
8	Stem Seal	1	PTFE
9	Stem	1	St.St.316
10	Body	1	St.St.316
11	Ball	1	St.St.316
12	Seat	2	TFM®1600
13	Gasket	1	PTFE
14	End	1	St.St.316
15	Front Ferrule	2	St.St.316
16	Back Ferrule	2	St.St.316
17	Nut LET-LOK®	2	St.St.316

Lubricant: silicon-based grease for oxygen applications, according to HAM-LET Procedure 8055

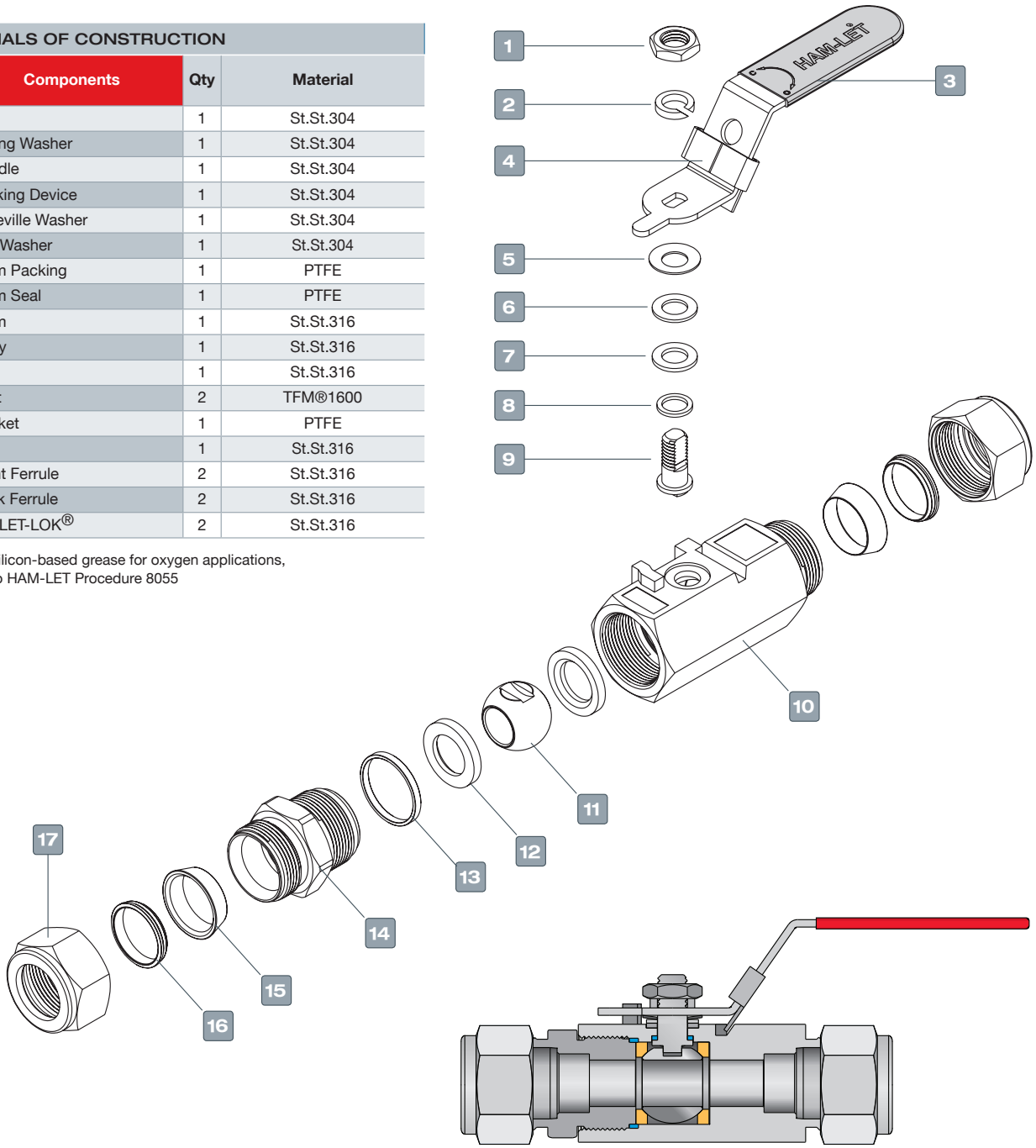

H-700

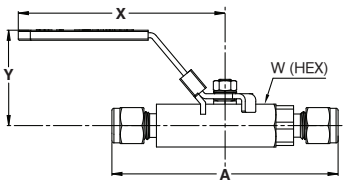

H-710

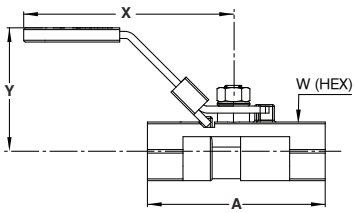

H-780

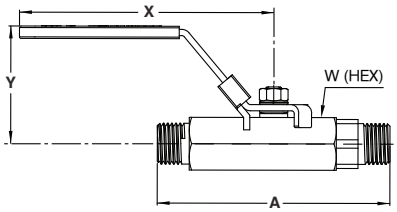

H-785

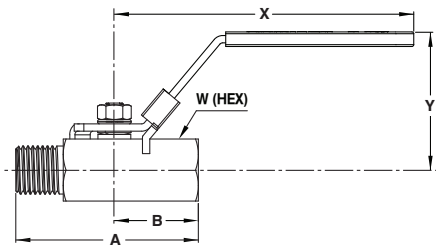

H-795

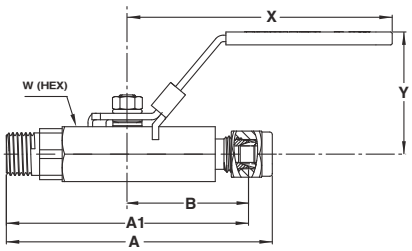

STANDARD CONFIGURATION DIMENSIONS

End Connection		Valve Type	Body Material	Cv	Oriffice		A		A1		B		X		Y		W (HEX)	
Type	Size				mm	inch	mm	inch	mm	inch	mm	inch	mm	inch	mm	inch	mm	inch
Fractional Let-Lok® Tube Fittings	1/4	H-700	ASTM A276 Gr.316	1.25	5	0.2	90	3.54					82	3.23	38	1.5	17	
	3/8			2.5	7	0.28	90	3.54					82	3.23	40	1.57	21	
	1/2		ASTM A351 Gr.CF8M	9.25	9.2	0.36	95.3	3.75					82	3.23	40.7	1.6	25	
	3/4			12.65	12.5	0.49	113.4	4.46					82	3.23	44.5	1.75	32	
	1			17.35	15	0.59	129.6	5.1					102	4.02	50	1.97	38	
Metric Let-Lok® Tube Fittings	6MM		ASTM A276 Gr.316	1.25	5	0.2	90	3.54					82	3.23	38	1.5	17	
	8MM			1.35	7	0.28	90	3.54					82	3.23	40	1.57	21	
	10MM			2.6	7	0.28	90	3.54					82	3.23	40	1.57		13/16
	12MM		ASTM A351 Gr.CF8M	9.25	9.2	0.36	95.3	3.75					82	3.23	40.7	1.6	25	
	25MM			17.35	15	0.59	129.6	5.1					102	4.02	50	1.97	38	
Female NPT	1/4	H-710	ASTM A351 Gr.CF8M	1.35	5	0.2	50	1.97					67	2.64	47	1.85	16.5	
	3/8			2.6	7	0.28	60	2.36					67	2.64	49	1.93		13/16
	1/2			9.25	9	0.35	75	2.95					90	3.54	57	2.24	25	
	3/4			12.65	12.5	0.49	59	2.32					85	3.35	44	1.73	32	
	1			17.35	15	0.59	71	2.8					102	4.02	50	1.97	41	
Male NPT	1/4	H-780	ASTM A276 Gr.316	1.35	5	0.2	50.3	1.98					82	3.23	38	1.5	17	
	3/8			2.5	7	0.28	62.2	2.45					82	3.23	40	1.57	21	
	1/2		ASTM A351 Gr.CF8M	9.25	9.2	0.36	74.9	2.95					82	3.23	40.7	1.6	25	
Male to Female NPT	1/4	H-785	ASTM A276 Gr.316	1.35	5	0.2	50	1.97			24.85	0.98	82	3.23	38	1.5	17	
	1/2		ASTM A351 Gr.CF8M	9.25	9	0.35	70	2.95			37.5	1.47	82	3.23	56.6	2.23	27	
	1			17.35	15	0.59	90	3.54			45.5	1.79	102	4.02	53	2.09		1-3/4
Male NPT to Let-Lok® Tube Fittings	1/4	H-795	ASTM A351 Gr.CF8M	1.25	5	0.2	70.15	2.76	62.8	2.47	37.5	1.47	82	3.23	38	1.5	17	
	3/8			2.5	7	0.28	82.3	2.99	75	2.95	37.5	1.47	82	3.23	40	1.57	21	
	1/2			9.25	9.2	0.36	85	3.35	75	2.95	37.5	1.47	82	3.23	40.7	1.6	25	
	3/4			12.65	12.5	0.49	104.66	4.12	94.5	3.72	46.55	1.83	82	3.23	44.5	1.75	32	
	1			17.35	15	0.59	117.4	4.62	105.2	4.14	52.61	2.07	102	4.02	50	1.97	38	

CLEANING & PACKAGING

H-700 Ball Valve is treated with HAM-LET Passivation Cleaning and Packaging (Procedure 8075).
HAM-LET H-700 Ball Valves with face seal end connections are treated with Oxygen Cleaning and Packaging (Procedure 8055).

TESTING

The H-700 Series Ball Valve designs have been tested for Proof and Burst. Every H-700 Ball Valve is factory tested with nitrogen at 1000 psi (69 bar). Maximum allowable leakage across seat is 0.1 std cc/min.

H-700 PRESSURE TEMPERATURE RATING

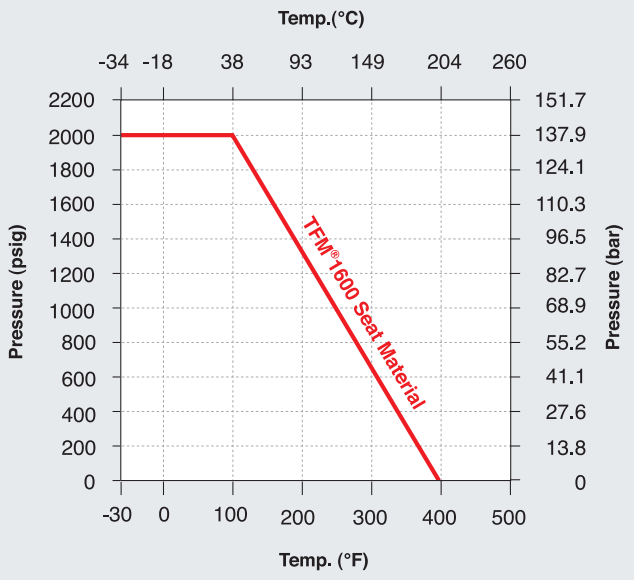

SEAT MATERIAL CHARACTERISTICS

TFM®1600 - (PFA and PTFE composite) - Color: Bright White.
Excellent seat material for purity applications, very low residual material during operation. It has lower deformation ratio than PTFE, but higher pressure and temperature rating.
Chemical resistance is equal to PTFE material.

PACKING ADJUSTMENT

Due to the varied service applications of the valve, packing adjustment may be occasionally necessary. Packing is factory adjusted to 1000 psig service. Initial packing adjustment is recommended after installation and prior to start-up. Please find more information on H-700 under installation instructions.
HAM-LET Ball Valves are designed to be operated in the fully closed or fully open position.

LOCKING DEVICE MECHANISM

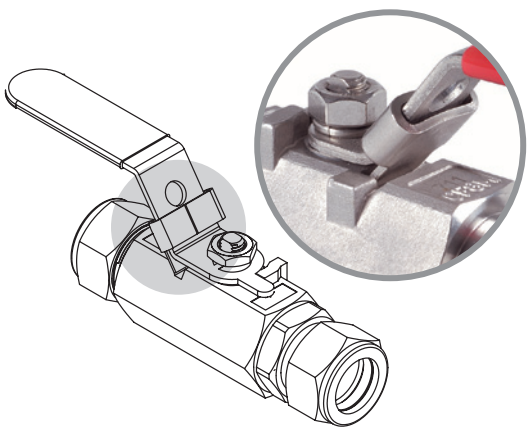

H–700 SERIES ORDERING INFORMATION

OPTIONAL

H–7 - 00 - SS - L - 1/4 - T - LD

Valve Series

Valve Type

00 -	LET-LOK® End
10 -	Female End
80 -	Male End
85 -	Male to Female End
95 -	Male to LET-LOK® End

Body and Ends Material

SS	- St.St. 316

End Connection Type

L	- LET-LOK® Tube Fitting
N	- Threaded NPT
HL	- One-Lok Tube Fittings
R	- ISO Tapered
G	- ISO P arallel
NL	- NPT to Let-Lok

Other end connections are available upon request.

End Connection Size

1/4	6 MM
3/8	8 MM
1/2	10 MM
3/4	12 MM
1”	25 MM

Seat Material

T	- TFM®1600

Operation Type

LD	Locking Device*
BH	Butterfly handle

* **Note:** LD is standard for Lever Handle

Treatment

BLANK	- Standard Cleaning & Passivation
OC	- Oxygen Clean
LF	- Lubricant Free

ORDERING INFORMATION FOR SPARE KITS

Valve Type	End Connection Size	Seal Kit Order No.	Handle Kit Order No.
H-700	1/4” , 6mm	Z-700-SK-1/4-T	Z-700-HK-1/4-LH
	3/8”, 8mm,10mm	Z-700-SK-3/8-T	Z-700-HK-3/8-LH
	1/2” , 12mm	Z-700-SK-1/2-T	Z-700-HK-1/2-LH
	3/4”	Z-700-SK-3/4-T	Z-700-HK-3/4-LH
	1” , 25mm	Z-700-SK-1”-T	Z-700-HK-1”-LH
H-710	1/4”	Z-710-SK-1/4-T	Z-710-HK-1/4-LH
	3/8”	Z-710-SK-3/8-T	Z-710-HK-3/8-LH
	1/2”	Z-710-SK-1/2-T	Z-710-HK-1/2-LH
	3/4”	Z-710-SK-3/4-T	Z-710-HK-3/4-LH
	1”	Z-710-SK-1”-T	Z-710-HK-1”-LH
H-780	1/4”	Z-700-SK-1/4-T	Z-700-HK-1/4-LH
	3/8”	Z-700-SK-3/8-T	Z-700-HK-3/8-LH
	1/2”	Z-700-SK-1/2-T	Z-700-HK-1/2-LH
H-795	1/4”	Z-700-SK-1/4-T	Z-700-HK-1/4-LH
	3/8”	Z-700-SK-3/8-T	Z-700-HK-3/8-LH
	1/2”	Z-700-SK-1/2-T	Z-700-HK-1/2-LH
H-785	1/4”	Z-710-SK-1/4-T	Z-710-HK-1/4-LH
	1/2”	Z-710-SK-1/2-T	Z-710-HK-1/2-LH

Warning! For your safety
The system designer and user have the sole responsibility for selecting products suitable for their special application requirements, ensuring their safe and trouble-free installation, operation, and maintenance. Application details, material compatibility and product ratings should all be considered for each selected product. Improper selection, installation or use of products can cause property damage or personal injury.

The kit includes gaskets, seats, stem packing and stem seal.

TFM® - TM DuPont
H-700, Rev.06, July 2011

SCREWED BONNET NEEDLE VALVES

H-99 & H-99HP SERIES

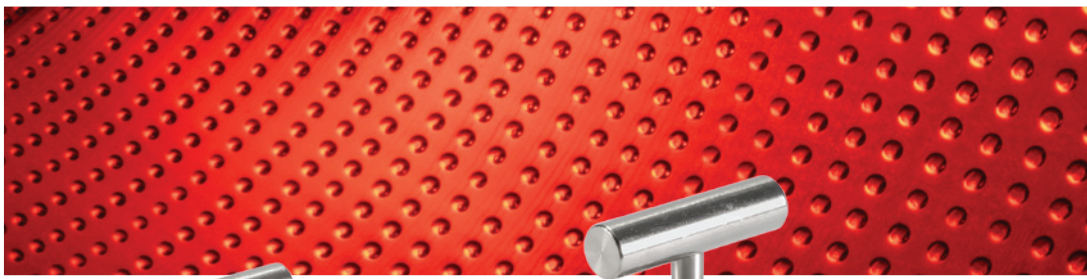

HAM-LET®
ADVANCED CONTROL TECHNOLOGY

FEATURES

- Blow-out Proof Stem
- MAWP up to 10,000 psi (690 bar)
- MAWT up to 600°C (1112°F)
- Size range: 1/4" to 1" or 6mm to 25mm

GENERAL

The H-99 & H-99HP Series offers a general-service valve of rugged design and construction. It is available in stainless steel to suit a wide range of services.
Capable of withstanding high pressures (10,000 psig max) and high temperature.
This valve is typically used in a severe environment, high pressure sampling systems, high pressure shut-down systems and test stands.

MATERIALS OF CONSTRUCTION

No.	Components		Qty	Material
1	Set Screw		1	SS 304
2	Handle		1	SS 304
3	Gland Nut		1	SS 304
4	Upper Gland		1	SS 304
5	Packing		1 / 3	PTFE / Carbon Fiber
6	Bonnet	H-99HP	1	ASTM A276 Gr, 316
		H-99	1	ASTM A351 Gr, CF8M
7	Stem		1	SS 316
8	Body	H-99HP	1	ASTM A276 Gr, 316
		H-99	1	ASTM A351 Gr, CF8M
9	Safety Pin		1	SS 304

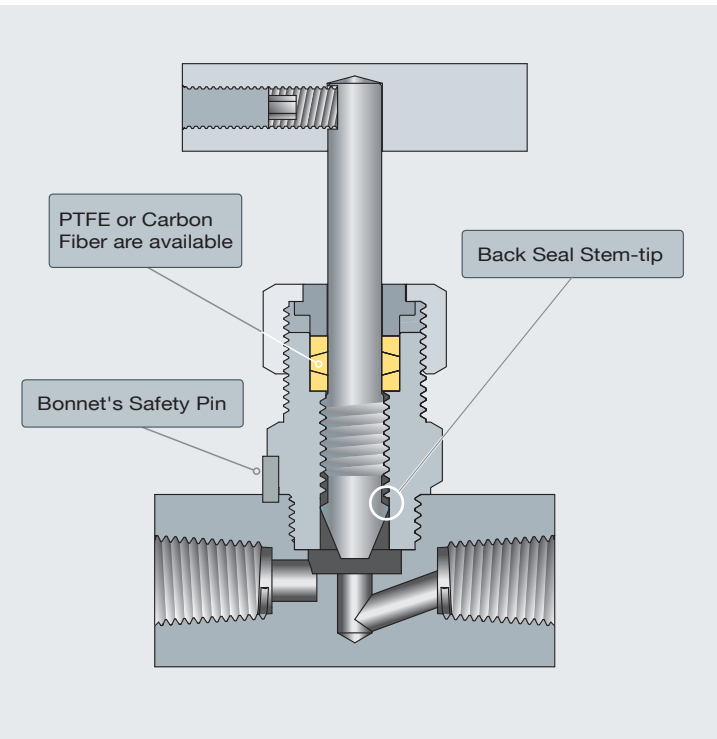

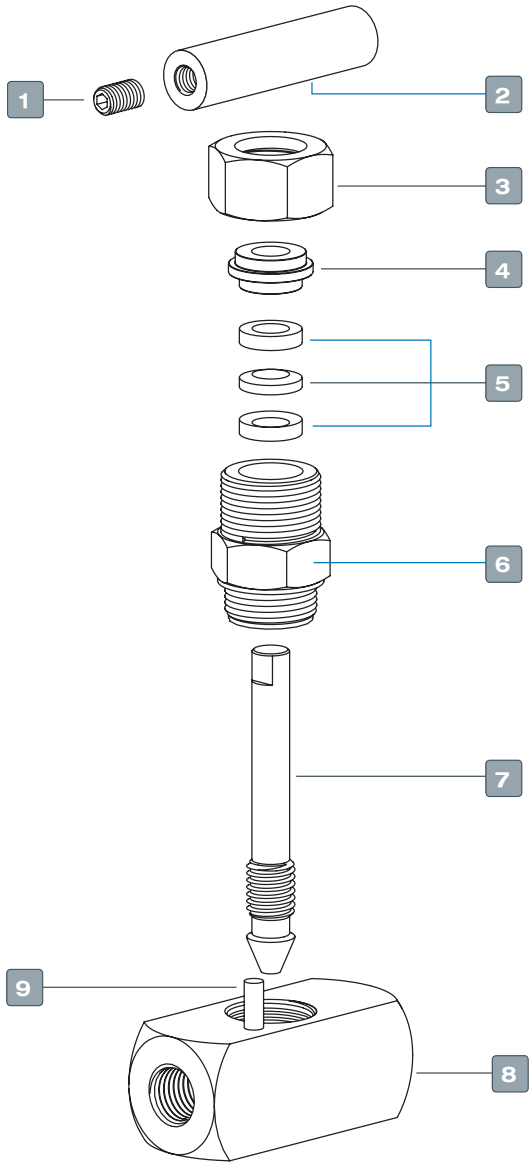

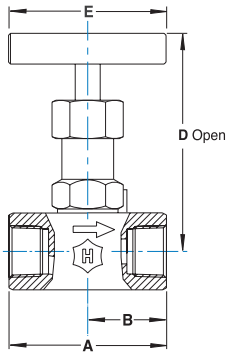

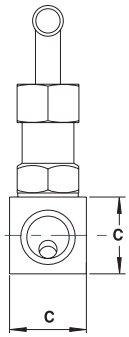

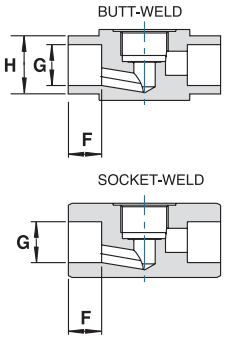

Table 1

STANDARD CONFIGURATION DIMENSIONS

End		Orifice		A		B		C		D		E		F		G		H	
Connection	Size	mm	in	mm	in	mm	in	mm	in	mm	in	mm	in	mm	in	mm	in	mm	in
Let-Lok® Inch	1/4"	5.00	0.20	72.7	2.9	36.4	1.4	25.0	1.0	75.0	3.0	50.0	1.96						
	3/8"			72.7	2.9	36.4	1.4												
	1/2"			78.3	3.1	39.2	1.5												
	3/4"	6.00	0.24	85.3	3.4	42.7	1.7	30.0	1.2	87.0	3.4	60.0	2.4						
Let-Lok® Metric	6mm	5.00	0.20	72.8	2.9	36.4	1.4	25.0	1.0	75.0	3.0	50.0	1.96						
	8mm			73.0	2.9	36.5	1.4												
	10mm			73.2	2.9	36.6	1.4												
	12mm			78.2	3.1	39.1	1.5												
Female Thread (NPT/ISO)	1/8"	5.00	0.20	58.0	2.3	29.0	1.1	25.0	1.0	75.0	3.0	50.0	1.96						
	1/4"																		
	3/8"																		
	1/2"	6.00	0.24	65.0	2.6	32.5	1.3	30.0	1.2	87.0	3.4	60.0	2.4						
	3/4"			70.0	2.8	35.0	1.4	35.0	1.4	90.0	3.5	60.0	2.4						
	1"	8.00	0.31	80.0	3.1	40.0	1.6	45.0	1.8	103.0	4.1	80.0	3.1						
Tube Socket Weld Inch	1/4"	5.00	0.20	58.0	2.3	29.0	1.1	25.0	1.0	75.0	3.0	50.0	1.96	6.4	0.3	6.5	0.3		
	3/8"													9.7	0.4	9.7	0.4		
	1/2"													12.7	0.5	12.9	0.5		
	3/4"	6.00	0.24	65.0	2.6	32.5	1.3	30.0	1.2	87.0	3.4	60.0	2.4	14.2	0.6	19.2	0.8		
	1"			70.0	2.8	35.0	1.4	35.0	1.4	90.0	3.5	60.0	2.4	19.2	0.8	25.6	1.0		
Tube Socket Weld Metric	6mm	5.00	0.20	58.0	2.3	29.0	1.1	25.0	1.0	75.0	3.0	50.0	1.96	6.0	0.2	6.2	0.2		
	8mm													7.9	0.3	8.2	0.3		
	10mm													12.7	0.5	10.2	0.4		
	12mm													12.7	0.5	12.2	0.5		
	25mm	6.00	0.24	70.0	2.8	35.0	1.4	35.0	1.4	90.0	3.5	60.0	2.4	19.2	0.8	25.2	1.0		
Pipe Socket Weld	1/8"	5.00	0.20	58.0	2.3	29.0	1.1	25.0	1.0	75.0	3.0	50.0	1.96	9.0	0.4	10.8	0.4		
	1/4"													14.0	0.6	14.0	0.6		
	3/8"													14.0	0.6	17.5	0.7		
	1/2"	6.00	0.24	65.0	2.6	32.5	1.3	30.0	1.2	87.0	3.4	60.0	2.4	16.5	0.65	22.0	0.9		
	3/4"			70.0	2.8	35.0	1.4	35.0	1.4	90.0	3.5	60.0	2.4	18.0	0.7	27.5	1.1		
	1"	8.00	0.31	80.0	3.1	40.0	1.6	45.0	1.8	103.0	4.1	80.0	3.1	20.0	0.8	34.5	1.4		
Tube Butt Weld Inch	1/4"	5.00	0.20	58.0	2.3	29.0	1.1	25.0	1.0	75.0	3.0	50.0	1.96	-	-	3.1	0.1	6.4	0.3
	3/8"													6.0	0.2	6.2	0.2	9.5	0.4
	1/2"													6.0	0.2	8.5	0.3	12.7	0.5
	3/4"	6.00	0.24	65.0	2.6	32.5	1.3	30.0	1.2	87.0	3.4	60.0	2.4	8.0	0.3	13.5	0.5	19.1	0.8
	1"			70.0	2.8	35.0	1.4	35.0	1.4	90.0	3.5	60.0	2.4	10.0	0.4	19.3	0.8	25.4	1.0
Tube Butt Weld Metric	6mm	5.00	0.20	58.0	2.3	29.0	1.1	25.0	1.0	75.0	3.0	50.0	1.96	-	-	3.1	0.1	6.0	0.2
	8mm													-	-	4.8	0.2	8.0	0.3
	10mm													6.0	0.2	6.7	0.3	10.0	0.4
	12mm													6.0	0.2	7.8	0.3	12.0	0.5
	25mm	6.00	0.24	70.0	2.8	35.0	1.4	35.0	1.4	90.0	3.5	60.0	2.4	10.0	0.4	18.9	0.7	25.0	1.0
Pipe (S40) Butt Weld	1/8"	5.00	0.20	58.0	2.3	29.0	1.1	25.0	1.0	75.0	3.0	50.0	1.96	6.0	0.2	7.1	0.3	10.5	0.4
	1/4"															9.2	0.4	13.7	0.5
	3/8"															12.5	0.5	17.1	0.7
	1/2"	6.00	0.24	65.0	2.6	32.5	1.3	30.0	1.2	87.0	3.4	60.0	2.4	8.0	0.3	15.8	0.6	21.3	0.8
	3/4"			70.0	2.8	35.0	1.4	35.0	1.4	90.0	3.5	60.0	2.4	10.0	0.4	21.0	0.8	26.7	1.1
	1"	8.00	0.31	80.0	3.1	40.0	1.6	45.0	1.8	103.0	4.1	80.0	3.1	12.0	0.5	26.6	1.0	33.4	1.3
Male Thread to Female Thread (NPT/ISO)	1/4"	5.00	0.20	60.0	2.4	29.0	1.1	25.0	1.0	75.0	3.0	50.0	1.96						
	3/8"																		
	1/2"	6.00	0.24	70.0	2.8	32.5	1.3	30.0	1.2	87.0	3.4	60.0	2.4						
	3/4"			75.0	3.0	35.0	1.4	35.0	1.4	90.0	3.5	60.0	2.4						
	1"	8.00	0.31	85.0	3.3	40.0	1.6	45.0	1.8	103.0	4.1	80.0	3.1						

Dimensions are for reference only, and are subject to change. Face to face dimensions for LET-LOK® end connections (dimensions A and B) are finger tight.

HIGH PERFORMANCE NEEDLE VALVE FOR EASY MOUNTING

H-99M & H-99HPM SERIES

All flow data, dimensions and application of use are same as H-99 & H-99HP

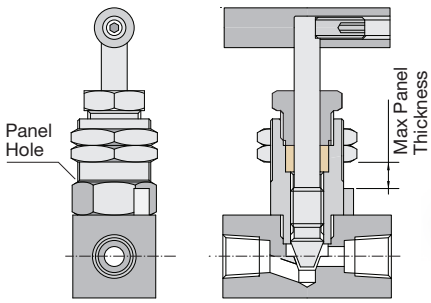

Pat. Pending

MOUNTING CONFIGURATION DIMENSIONS

End		Panel Hole		Max Panel Thickness	
Connection	Size	mm	in	mm	in
Let-Lok® Inch	1/4"	22.0	0.87	6.35	0.25
	3/8"				
	1/2"				
	3/4"	25.0	0.98	6.35	0.25
Let-Lok® Metric	6mm	22.0	0.87	6.35	0.25
	8mm				
	10mm				
	12mm				
Female Thread (NPT/ISO)	1/8"	22.0	0.87	6.35	0.25
	1/4"				
	3/8"				
	1/2"	25.0	0.98	6.35	0.25
	3/4"				
	1"	27.0	1.06	6.35	0.25
Tube Socket Weld Inch	1/4"	22.0	0.87	6.35	0.25
	3/8"				
	1/2"				
	3/4"	25.0	0.98	6.35	0.25
	1"				
Tube Socket Weld Metric	6mm	22.0	0.87	6.35	0.25
	8mm				
	10mm				
	12mm				
	25mm	25.0	0.98	6.35	0.25

MOUNTING CONFIGURATION DIMENSIONS

End		Panel Hole		Max Panel Thickness	
Connection	Size	mm	in	mm	in
Pipe Socket Weld	1/8"	22.0	0.87	6.35	0.25
	1/4"				
	3/8"				
	1/2"	25.0	0.98	6.35	0.25
	3/4"				
	1"	27.0	1.06	6.35	0.25
Tube Butt Weld Inch	1/4"	22.0	0.87	6.35	0.25
	3/8"				
	1/2"				
	3/4"	25.0	0.98	6.35	0.25
	1"				
Tube Butt Weld Metric	6mm	22.0	0.87	6.35	0.25
	8mm				
	10mm				
	12mm				
	25mm	25.0	0.98	6.35	0.25
Pipe (S40) Butt Weld	1/8"	22.0	0.87	6.35	0.25
	1/4"				
	3/8"				
	1/2"	25.0	0.98	6.35	0.25
	3/4"				
	1"	27.0	1.06	6.35	0.25
Male Thread to Female Thread (NPT/ISO)	1/4"	22.0	0.87	6.35	0.25
	3/8"				
	1/2"	25.0	0.98	6.35	0.25
	3/4"				
	1"	27.0	1.06	6.35	0.25

EASY MOUNTING PROCEDURE

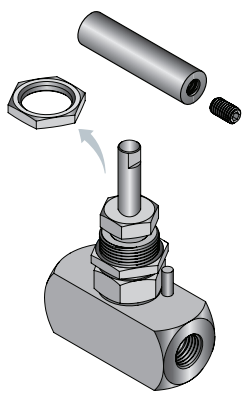

1. Disassemble the handle, using an appropriate hex key. Take off the upper panel nut. Set the lower panel nut into the desired place to determine mounting height.

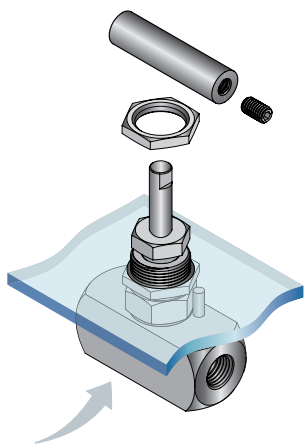

2. Insert the valve into the panel hole and reassemble the upper panel nut. Firmly tighten the upper nut.

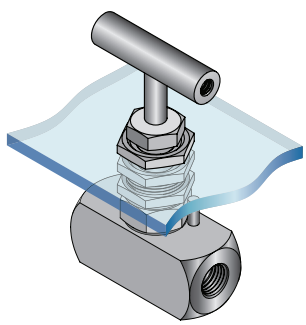

3. Reassemble the handle. Firmly tighten the hex screw.

CLEANING & PACKAGING

HAM-LET H-99 & H-99HP Needle Valves are treated with HAM-LET Passivation Cleaning and Packaging (Procedure 8075).
Special Cleaning for Oxygen service is available upon request.

TESTING

The H-99 & H-99HP Series Needle Valve designs have been tested for Proof and Burst.
Every H-99 & H-99HP Needle Valve is factory tested with Nitrogen at 1000 psi (69 bar).
The maximum allowable leakage across seat is 0.1 std cc/min.

PACKING ADJUSTMENT

Due to the varied service applications of the valve, packing adjustment may be occasionally necessary.
Valve Packing is factory preadjusted to 1000 psig service.
Initial packing adjustment is recommended after installation and prior to start-up.

FLOW DATA AT 100°F (37°C)

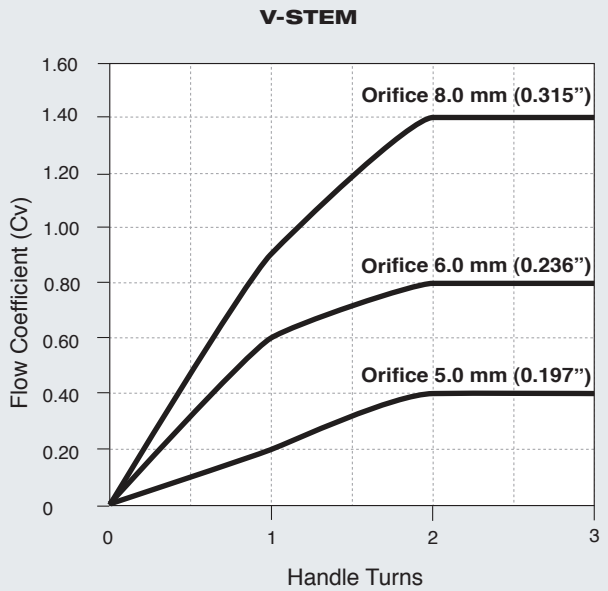

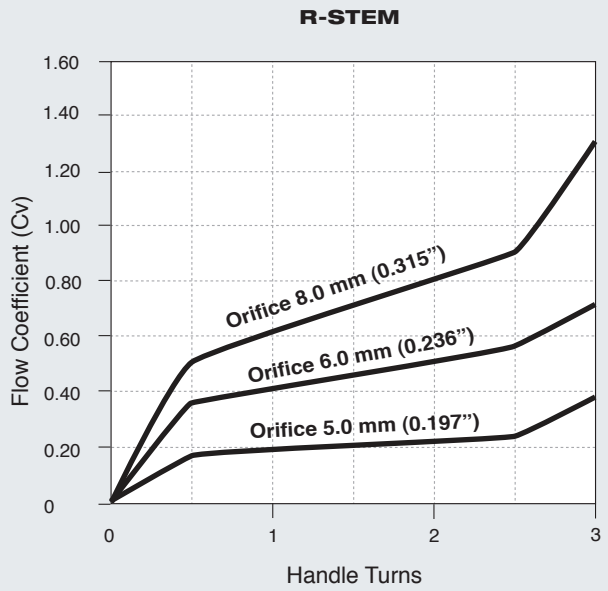

PRESSURE TEMPERATURE RATING THREADED & WELD CONNECTION

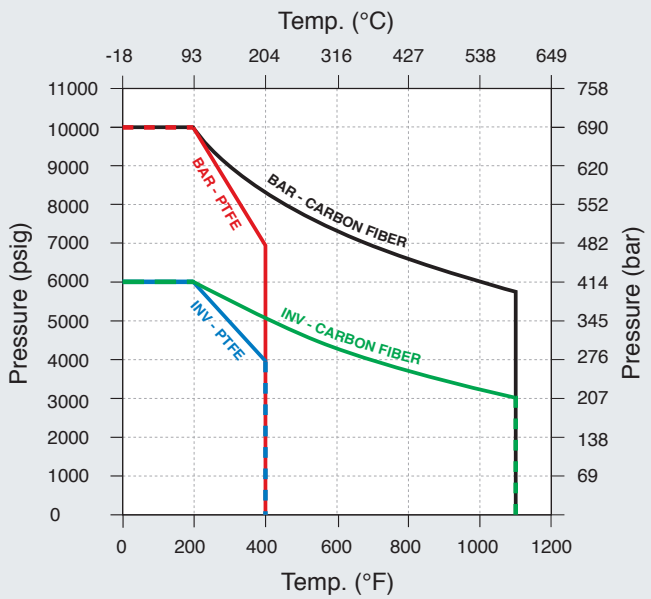

MAX. PRESSURE RATING AT 70°F (21°C)

Body Raw Material	Pressure	
	psi	bar
Investment casting	6000	414
Bar Stock	10000	690

MAX. ALLOWED WORKING TEMPERATURE

Packing Material	Max. Temperature	
	°C	°F
PTFE	204	400
Carbon Fiber	600	1112

The max. allowable pressure of welded connected valve is limited to the max. allowed working pressure of the tube.

ALTERNATIVE STEMS

HAM-LET Needle Valves are available with a choice of stem-tip options to allow greater flexibility.

Regulating: Used where some degree of flow control is required.
V-Stem: A standard stem tip used for general-purpose liquids and gases.
Non-Rotating: Typically used in high-cycle applications to extend valve life. It is designed to prevent galling between the seat and stem.

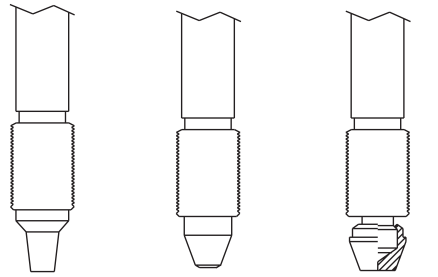

PRESSURE TEMPERATURE RATING LET-LOK CONNECTION

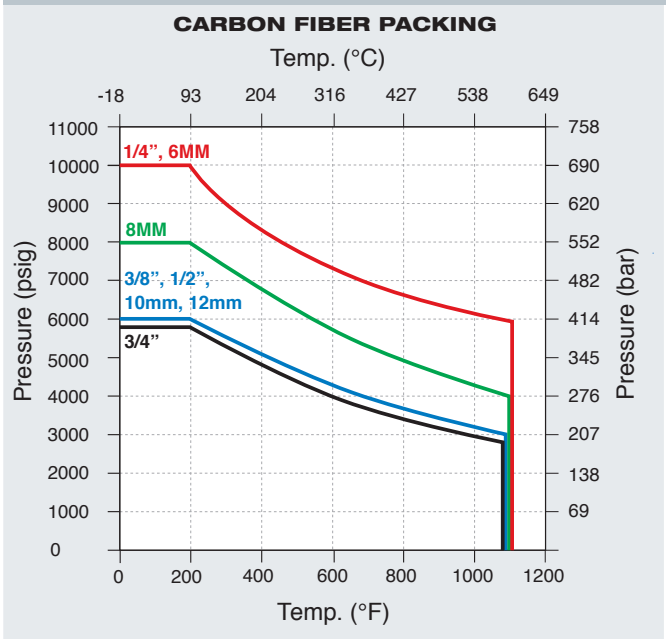

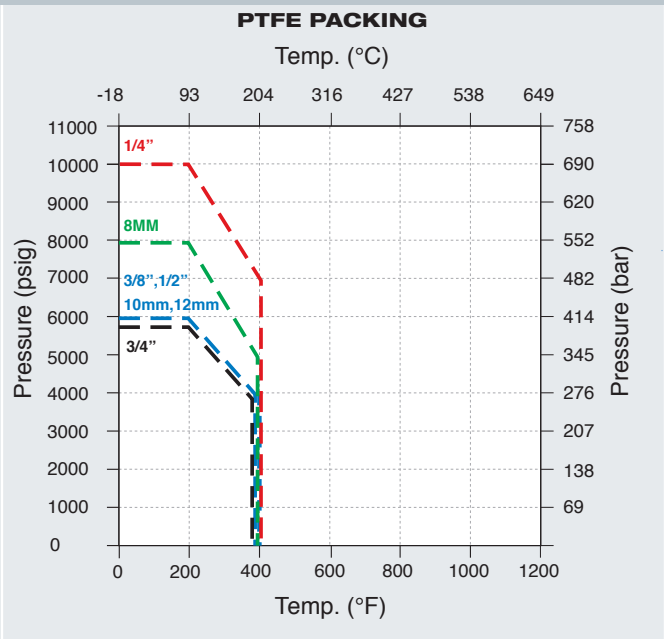

MAX. PRESSURE RATING AT 70°F (21°C)

Let-Lok Size		Let-Lok Size	
in	Pressure	mm	Pressure
1/4	10000 psi	6	10000 psi
-	-	8	8000 psi
3/8	6000 psi	10	6000 psi
1/2	6000 psi	12	6000 psi
3/4	5850 psi	-	-
1"	4700 psi	25	4700 psi

The max. allowed pressure of Let-Lok connected valve is limited to the max. allowed working pressure of the tube.

Note: Valves with Let-Lok ends are always made of barstock body.

H-99 SERIES ORDERING INFORMATION

OPTIONAL

H-99 HP M - 00 - SS - L - V - 1/2 - [ ] - [ ]

Valve Series

Body Raw Material

Blank -	Investment Casting
HP -	Bar stock

Structure

Blank -	Standard
M -	Mountable

Valve Type

00 -	LET-LOK® End*
10 -	Female End
80 -	Male End*
85 -	Male to Female End

* Always made of Bar stock

Material

St.St. 316

End Connection Type

L	- LET-LOK® End
N	- Threaded NPT
R	- ISO Taper
G	- ISO Parallel
TBW	- Tube Butt-Weld
TSW	- Tube Socket-Weld
PBW	- Pipe Butt-Weld (Schedule 40)
PSW	- Pipe Socket Weld

Stem

V	- V Stem
R	- Regulating Stem
NR	- Non Rotating

Size

1/4	**6**MM
3/8	**8**MM
1/2	**10**MM
3/4	**12**MM
1”	**25**MM

Packing

Blank	- PTFE
CF	- Carbon Fiber

Treatment

BLANK	- Standard Cleaning & Passivation
OC	- Oxygen Clean
LF	- Lubricant Free

SEAL KIT

Included: Packing & Label

Z - 99 - SK - 1/4 - PT

Packing

1/4	- For 1/4 to 3/8 ends
1/2	- For 1/2 to 3/4 ends
1"	- For 1 ends

Packing

PT	- PTFE
CF	- Carbon Fiber

Note: For TBW and TSW End Connections please contact Ham-Let Local representative

HANDLE KIT

Z - 99 - SS - HK - 60MM

SIZE	
50MM	Per Table 1, Dimension E
60MM	
80MM	

Warning! For your safety

The system designer and user have the sole responsibility for selecting products suitable for their special application requirements, ensuring their safe and trouble-free installation, operation, and maintenance. Application details, material compatibility and product ratings should all be considered for each selected product. Improper selection, installation or use of products can cause property damage or personal injury.

H-99, Rev.03, July 2011

SEVERE SERVICE SCREWED–BONNET NEEDLE VALVES

H-98 & H-98HP SERIES

HAM-LET®
ADVANCED CONTROL TECHNOLOGY

FEATURES

- Blow-out Proof Stem
- MAWP up to 10,000 psi (690 bar)
- MAWT up to 260°C (500°F)
- Size range: 1/4" to 1" or 6mm to 25mm
- Adjustable Packing
- Packing below stem threads protects stem threads from fluid contaminations

GENERAL

The H-98 & H-98HP Series offers a severe-service valve of rugged design and construction.
It is available in stainless steel to suit a wide range of services.
Capable of withstanding high pressures (10,000 psig max) and high temperature.
This valve is typically used in a severe environment, high pressure sampling systems, high pressure shut-down systems and test stands.

MATERIALS OF CONSTRUCTION

No.	Components		Qty	Material
1	Handle		1	Stainless Steel 304
2	Cap		1	PVC
3	Gland		1	Stainless Steel 304
4	Locking Nut		1	Stainless Steel 304
5	Packing		1	PTFE / PEEK
6	Bonnet	H-98HP	1	ASTM A276 Gr 316
		H-98	1	ASTM A351 Gr CF8M
7	Stem		1	Stainless Steel 316 / A276
8	Safety Pin		1	Stainless Steel 304
9	Body	H-98HP	1	ASTM A276 Gr 316
		H-98	1	ASTM A351 Gr CF8M

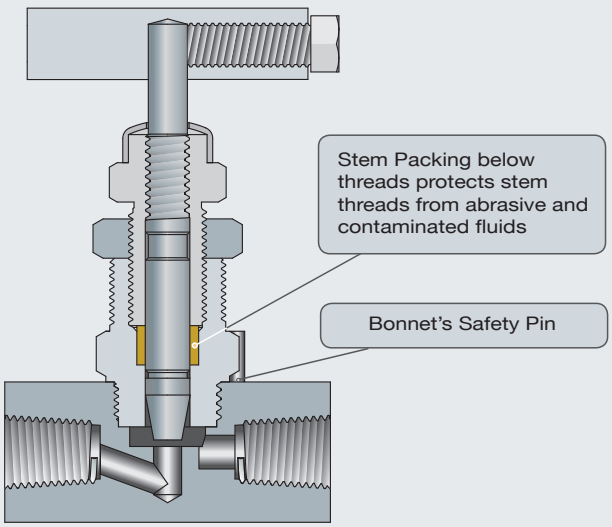

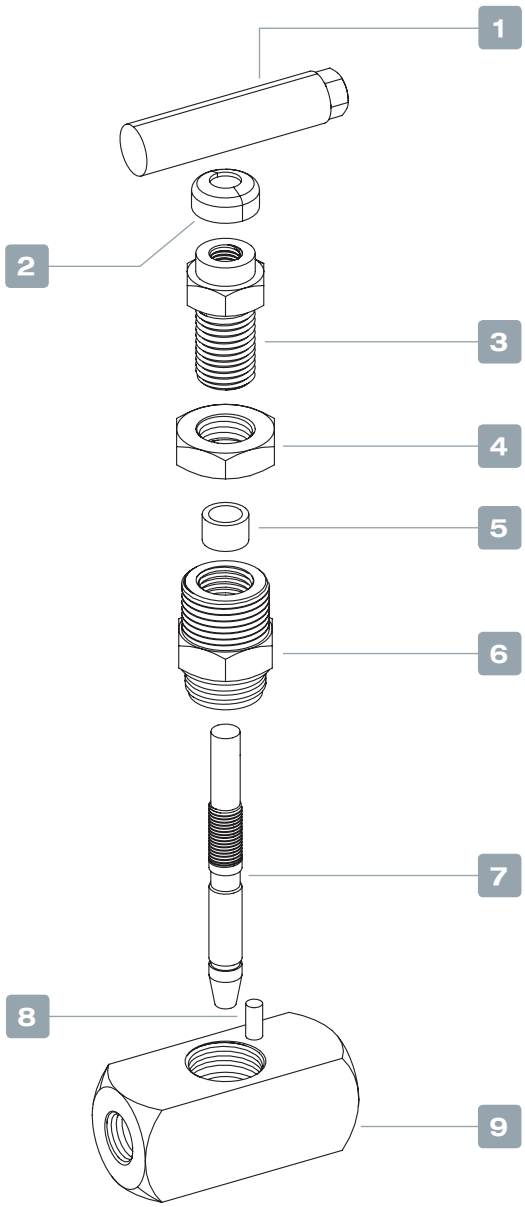

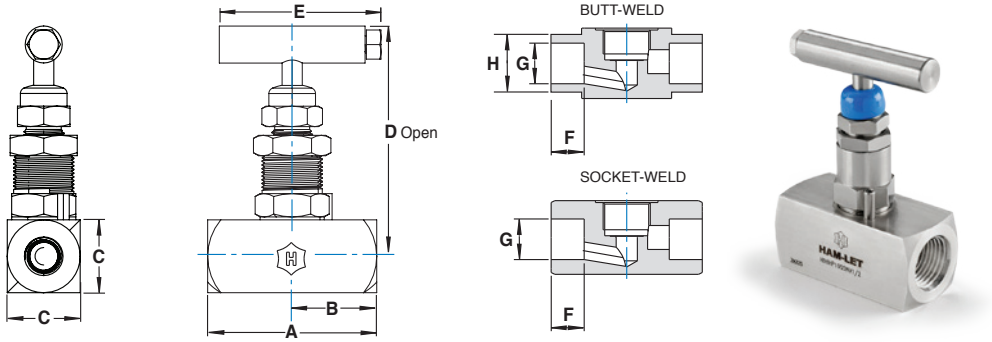

STANDARD CONFIGURATION DIMENSIONS

End		Orifice		A		B		C		D		E		F		G		H	
Connection	Size	mm	in	mm	in	mm	in	mm	in	mm	in	mm	in	mm	in	mm	in	mm	in
Let-Lok® Tube Fittings	1/4"	5.00	0.20	72.7	2.9	36.4	1.4	25.0	1.0	79.0	3.1	62.0	2.4						
	3/8"			72.7	2.9	36.4	1.4												
	1/2"			78.3	3.1	39.2	1.5												
	3/4"	6.00	0.24	85.3	3.4	42.7	1.7	30.0	1.2	81.0	3.2								
Let-Lok® Metric	6mm	5.00	0.20	72.8	2.9	36.4	1.4	25.0	1.0	79.0	3.1	62.0	2.4						
	8mm			73.0	2.9	36.5	1.4												
	10mm			73.2	2.9	36.6	1.4												
	12mm			78.2	3.1	39.1	1.5												
Female Thread (NPT/ISO)	1/8"	5.00	0.20	58.0	2.3	29.0	1.1	25.0	1.0	79.0	3.1	62.0	2.4						
	1/4"																		
	3/8"																		
	1/2"	6.00	0.24	65.0	2.6	32.5	1.3	30.0	1.2	81.0	3.2								
	3/4"			70.0	2.8	35.0	1.4	35.0	1.4	84.0	3.3								
	1"	8.00	0.31	80.0	3.1	40.0	1.6	45.0	1.8	89.0	3.5								
Tube Socket Weld Inch	1/4"	5.00	0.20	58.0	2.3	29.0	1.1	25.0	1.0	79.0	3.1	62.0	2.4	6.4	0.3	6.5	0.3		
	3/8"													9.7	0.4	9.7	0.4		
	1/2"													12.7	0.5	12.9	0.5		
	3/4"	6.00	0.24	65.0	2.6	32.5	1.3	30.0	1.2	81.0	3.2			14.2	0.6	19.2	0.8		
	1"			70.0	2.8	35.0	1.4	35.0	1.4	84.0	3.3			19.2	0.8	25.6	1.0		
Tube Socket Weld Metric	6mm	5.00	0.20	58.0	2.3	29.0	1.1	25.0	1.0	79.0	3.1	62.0	2.4	6.0	0.2	6.2	0.2		
	8mm													7.9	0.3	8.2	0.3		
	10mm													12.7	0.5	10.2	0.4		
	12mm													12.7	0.5	12.2	0.5		
	25mm	6.00	0.24	70.0	2.8	35.0	1.4	35.0	1.4	84.0	3.3			19.2	0.8	25.2	1.0		
Pipe Socket Weld	1/8"	5.00	0.20	58.0	2.3	29.0	1.1	25.0	1.0	79.0	3.1	62.0	2.4	9.0	0.4	10.8	0.4		
	1/4"													14.0	0.6	14.0	0.6		
	3/8"													14.0	0.6	17.5	0.7		
	1/2"	6.00	0.24	65.0	2.6	32.5	1.3	30.0	1.2	81.0	3.2			16.5	0.6	22.0	0.9		
	3/4"			70.0	2.8	35.0	1.4	35.0	1.4	84.0	3.3			18.0	0.7	27.5	1.1		
	1"	8.00	0.31	80.0	3.1	40.0	1.6	45.0	1.8	89.0	3.5			20.0	0.8	34.5	1.4		
Tube Butt Weld Inch	1/4"	5.00	2.3	58.0	2.3	29.0	1.1	25.0	1.0	79.0	3.1	62.0	2.4	-	-	3.1	0.1	6.4	0.3
	3/8"													6.0	0.2	6.2	0.2	9.5	0.4
	1/2"													6.0	0.2	8.5	0.3	12.7	0.5
	3/4"	6.00	0.24	65.0	2.6	32.5	1.3	30.0	1.2	81.0	3.2			8.0	0.3	13.5	0.5	19.1	0.8
	1"			70.0	2.8	35.0	1.4	35.0	1.4	84.0	3.3			10.0	0.4	19.3	0.8	25.4	1.0
Tube Butt Weld Metric	6mm	5.00	0.20	58.0	2.3	29.0	1.1	25.0	1.0	79.0	3.1	62.0	2.4	-	-	3.1	0.1	6.0	0.2
	8mm													-	-	4.8	0.2	8.0	0.3
	10mm													6.0	0.2	6.7	0.3	10.0	0.4
	12mm													6.0	0.2	7.8	0.3	12.0	0.5
	25mm	6.00	0.24	70.0	2.8	35.0	1.4	35.0	1.4	84.0	3.3			10.0	0.4	18.9	0.7	25.0	1.0
Pipe (S40) Butt Weld	1/8"	5.00	0.20	58.0	2.3	29.0	1.1	25.0	1.0	79.0	3.1	62.0	2.4	6.0	0.2	7.1	0.3	10.5	0.4
	1/4"															9.2	0.4	13.7	0.5
	3/8"															12.5	0.5	17.1	0.7
	1/2"	6.00	0.24	65.0	2.6	32.5	1.3	30.0	1.2	81.0	3.2			8.0	0.3	15.8	0.6	21.3	0.8
	3/4"			70.0	2.8	35.0	1.4	35.0	1.4	84.0	3.3			10.0	0.4	21.0	0.8	26.7	1.1
	1"	8.00	0.31	80.0	3.1	40.0	1.6	45.0	1.8	89.5	3.5			12.0	0.5	26.6	1.0	33.4	1.3
Male Thread to Female Thread (NPT/ISO)	1/4"	5.00	0.20	60.0	2.4	29.0	1.1	25.0	1.0	79.0	3.1	62.0	2.4						
	3/8"																		
	1/2"	6.00	0.24	70.0	2.8	32.5	1.3	30.0	1.2	81.0	3.2								
	3/4"			75.0	3.0	35.0	1.4	35.0	1.4	84.0	3.3								
	1"	8.00	0.31	85.0	3.3	40.0	1.6	45.0	1.8	89.5	3.5								

Dimensions are for reference only, and are subject to change. Face to face dimensions for LET-LOK® end connections (dimensions A and B) are finger tight.

CLEANING & PACKAGING

HAM-LET H-98 & H-98HP Needle Valves are treated with HAM-LET Passivation Cleaning and Packaging (Procedure 8075). Special Cleaning for Oxygen service is available upon request.

TESTING

The H-98 & H-98HP Series Needle Valve designs have been tested for Proof and Burst.
Every H-98 & H-98HP Needle Valve is factory tested with Nitrogen at 1000 psi (69 bar).
The maximum allowable leakage across seat is 0.1 std cc/min.

PACKING ADJUSTMENT

Due to the varied service applications of the valve, packing adjustment may be occasionally necessary.
Valve packing is factory pre adjusted to 1000 psig service.
Initial packing adjustment is recommended after installation and prior to start-up.

FLOW DATA AT 100°F (37°C)

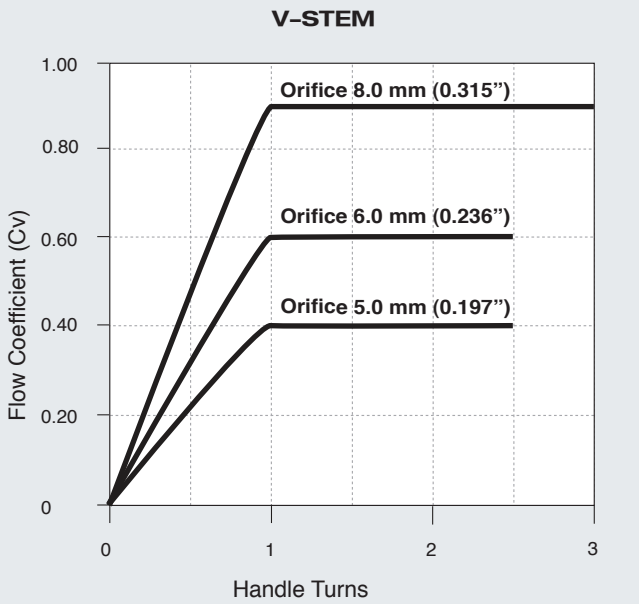

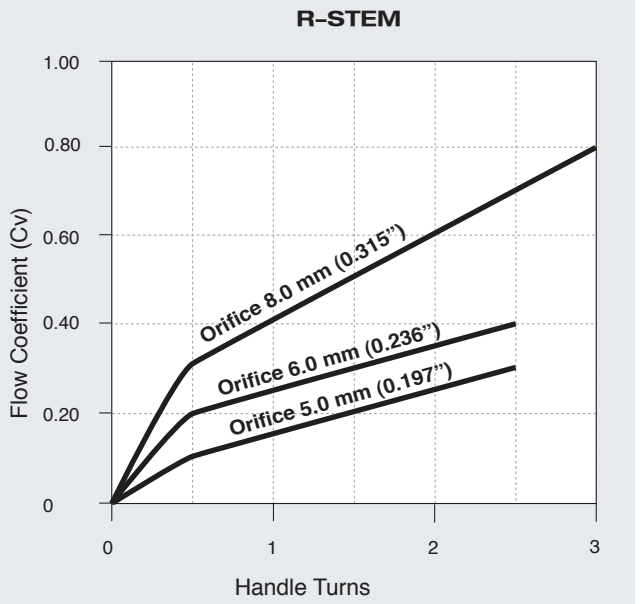

PRESSURE TEMPERATURE RATING **THREADED & WELD CONNECTIONS**

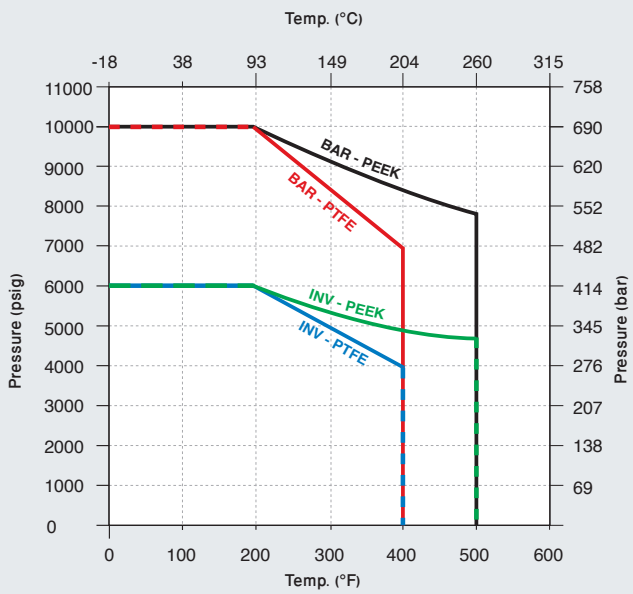

MAX. PRESSURE RATING AT 70°F (21°C)

Body Raw Material	Pressure	
	psi	bar
Investment casting	6000	414
Bar Stock	10000	690

MAX. ALLOWED WORKING AT TEMPERATURE

Body Raw Material	Pressure	
	°C	°F
PTFE	204	400
PEEK	260	500

The maximum allowable pressure of welded connected valve is limited to the maximum allowed working pressure of the tube.

ALTERNATIVE STEMS

HAM-LET Needle Valves are available with a choice of stem-tip options to allow greater flexibility.

Regulating: Used where some degree of flow control is required.
V-Stem: A standard stem tip used for general-purpose liquids and gases.
Non-Rotating: Typically used in high-cycle applications to extend valve life. It is designed to prevent galling between the seat and stem.

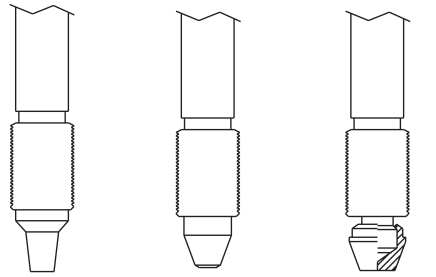

PRESSURE TEMPERATURE RATING **LET-LOK CONNECTION**

PTFE PACKING

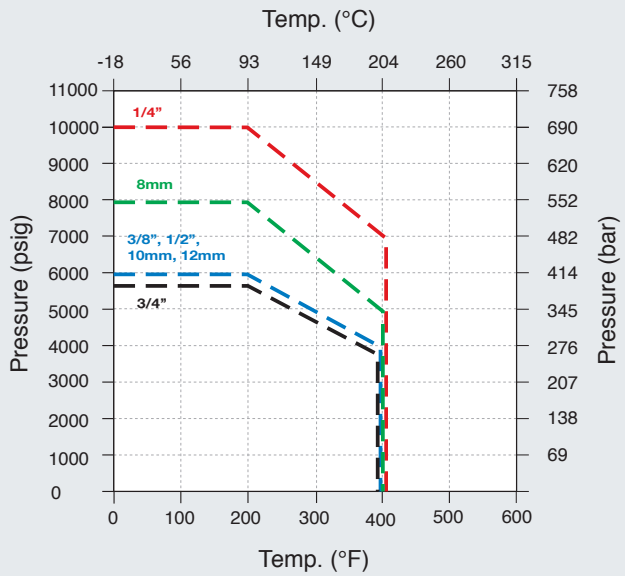

PEEK PACKING

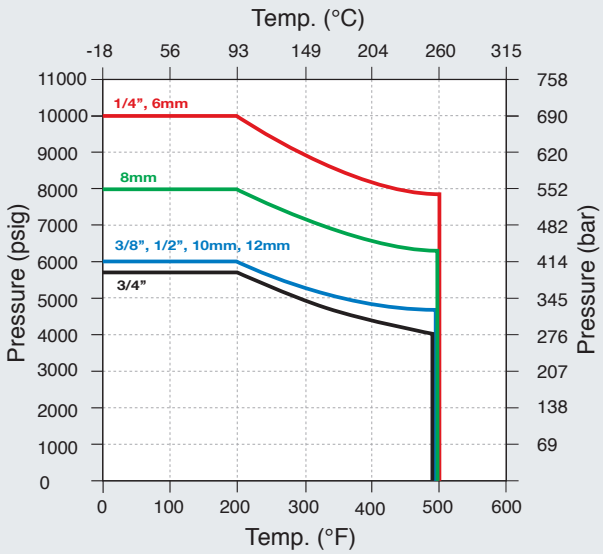

Note: Valves with Let-Lok ends are always made of barstock body.

MAX. PRESSURE RATING AT 70°F (21°C)

Pressure per Let-Lok Size			
in	**Pressure**	**mm**	**Pressure**
1/4	10000 psi	6	10000 psi
-	-	8	8000 psi
3/8	6000 psi	10	6000 psi
1/2	6000 psi	12	6000 psi
3/4	5850 psi	-	-
1"	4700 psi	25	4700 psi

The maximum allowed pressure of Let-Lok connected valve is limited to the maximum allowed working pressure of the tube.

H–98 & H–98HP SERIES ORDERING INFORMATION

H-98 HP - 00 - SS - L - V - 1/2 - [ ] - [ ]

OPTIONAL

Valve Series

Body Raw Material

BLANK -	Investment Casting
HP -	Bar stock

Valve Type

00 -	LET-LOK® End*
10 -	Female End
80 -	Male End*
85 -	Male to Female End

* Always made of ASTM-A276

Material

St.St. 316

End Connection Type

L	- LET-LOK® End
N	- Threaded NPT
R	- ISO Tapered
G	- ISO Parallel
TBW	- Tube Butt-Weld
TSW	- Tube Socket-Weld
PBW	- Pipe Butt-Weld (Schedule 40)
PSW	- Pipe Socket Weld

Stem

V	- V Stem
R	- Regulating Stem
NR	- Non-Rotating

End Connection Size

1/4	**6**MM
3/8	**8**MM
1/2	**10**MM
3/4	**12**MM
1”	**25**MM

Packing

BLANK	- PTFE
PK	- PEEK

Treatment

BLANK	- Standard Cleaning & Passivation
OC	- Oxygen Clean
LF	- Lubricant Free

SEAL KIT

Kit includes packing and label

Z - 98 - SK - 1/4 - PT

For H-98, H-98HP

Body Designator per end connections

1/4	For 1/8 to 3/8 ends
1/2	For 1/2 to 3/4 ends
1”	For 1 ends

Note: For TBW and TSW end connections please contact Ham-Let Local representative

Packing

PT	- PTFE
PK	- PEEK

Warning! For your safety

The system designer and user have the sole responsibility for selecting products suitable for their special application requirements, ensuring their safe and trouble-free installation, operation, and maintenance. Application details, material compatibility and product ratings should all be considered for each selected product. Improper selection, installation or use of products can cause property damage or personal injury.

H-98, Rev.03, July 2011

INTEGRAL–BONNET NEEDLE VALVES

H-300U SERIES

HAM-LET®
ADVANCED CONTROL TECHNOLOGY

FEATURES

- Straight and angle pattern
- Stainless steel and brass construction
- MAWP 5000 psi (345 bar), MAWT 446°F (230°C)
- Flow coefficient (Cv) 0.09 to 1.8
- Sizes: 1/8" to 3/4" (3mm-12mm)
- Round plastic, round aluminum, and metal bar handles
- Variety of stem types
- Packing bolt for easy panel mounting, no packing disassembling is required
- Chevron stem packing provides lowest operation torques
- Belleville washers to compensate packing wear
- Special synthetic, anti-seize stem lubricant for best resistance to hot media

MATERIAL OF CONSTRUCTION

No.		Component	Qty.	Material
1		Handle	1	Phenolic
2		Set Screw	1	St.St.316
3		Packing Bolt	1	St.St.316
4		Belleville Washer	2	St.St.302
5		Gland	2	St.St.316
6		Upper Packing	1	PTFE
7		Bottom Packing	1	PTFE
8	A	Regulating Stem	1	St.St.316 with surface treatment
	B	V-Stem	1	St.St.316 with surface treatment
	C	Non-Rotatin Stem	1	St.St.316 with surface treatment
	D	Soft Seat Stem	1	St.St.316 with surface treatment
9		Panel Nut	2	St.St.316
10		Body	1	St.St.316

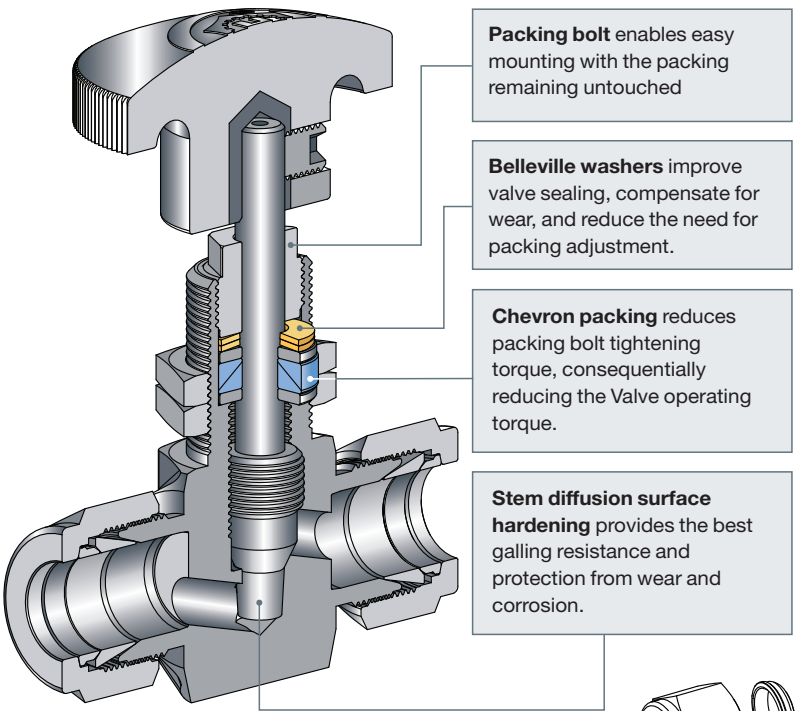

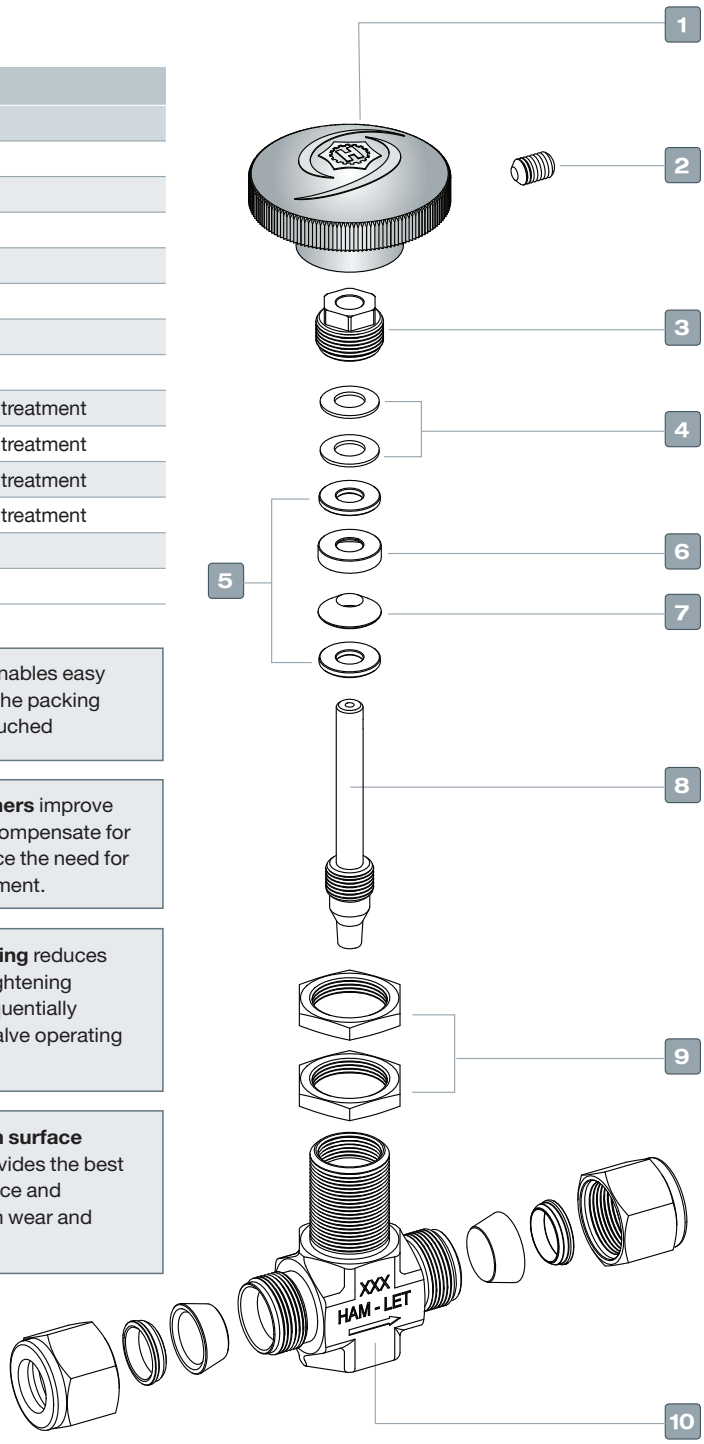

GENERAL

The H-300U Series is an advanced high pressure instrumentation needle valve for shut-off service, its packing bolt design for easy mounting being the best solution for instrumentation panels.

This compact valve enables relatively high level of flow regulation and long-life service. Special stem surface treatment, based on low temperature carbon diffusion, enables higher surface hardness with improved wear resistance, resistance to system contaminations and optimal operational torque.

STANDARD CONFIGURATION DIMENSIONS

Basic Ordering Number	Orifice mm (in) S/A	Cv	Connection Size		A		A1		A2		A3		B		C	D	E	F	G	H	T max
			Inlet	Outlet	mm	in	mm	in	mm	in	mm	in	mm	in	mm (in)	mm (in)	mm (in)	mm (in)	mm (in)	mm (in)	mm (in)
H-300	2.0 (0.08)	0.09	3mm LET-LOK	3mm LET-LOK	50.8	2.00	25.4	1.00	25.4	1.00	25.4	1.00	33.4	1.31	10.0 (0.39")	7.95 (0.31")	35.1 (1.38")	13.0 (0.51")	63.5 (2.50")	15.9 (5/8")	10.0 (0.39")
H-300			1/8" LET-LOK	1/8" LET-LOK	50.8	2.00	25.4	1.00	25.4	1.00	25.4	1.00	33.4	1.31							
H-395			1/8" MNPT	1/8" LET-LOK	45.3	1.78	19.9	0.78	25.4	1.00	19.9	0.78	33.4	1.31							
H-300	4.4 (0.172)	0.37	1/4" LET-LOK	1/4" LET-LOK	58.8	2.31	29.4	1.16	29.4	1.16	29.4	1.16	37.3	1.47							
H-300			6mm LET-LOK	6mm LET-LOK	58.8	2.31	29.4	1.16	29.4	1.16	29.4	1.16	37.3	1.47							
H-300			8mm LET-LOK	8mm LET-LOK	58.8	2.31	29.4	1.16	29.4	1.16	29.4	1.16	37.3	1.47							
H-310			1/8" FNPT	1/8" FNPT	41.2	1.62	20.6	0.81	20.6	0.81	20.6	0.81	28.5	1.12							
H-380			1/8" MNPT	1/8" MNPT	50.8	2.00	25.4	1.00	25.4	1.00	25.4	1.00	33.3	1.31							
H-380			1/4" MNPT	1/4" MNPT	50.8	2.00	25.4	1.00	25.4	1.00	25.4	1.00	33.3	1.31							
H-395			1/4" MNPT	1/4" LET-LOK	54.8	2.16	25.4	1.00	29.4	1.16	25.4	1.00	37.3	1.47							
H-300	6.4 (0.25)	0.73	3/8" LET-LOK	3/8" LET-LOK	66.0	2.60	33.0	1.30	33.0	1.30	33.0	1.30	49.5	1.95	14.3 (0.56")	16.5 (0.65")	47.8 (1.88")	20.0 (0.79")	78.4 (3.09")	23.8 (15/16")	12.0 (0.49")
H-300			10mm LET-LOK	10mm LET-LOK	66.4	2.62	33.2	1.31	33.2	1.31	33.2	1.31	49.7	1.96							
H-300			1/2" LET-LOK	1/2" LET-LOK	71.6	2.82	35.8	1.41	35.8	1.41	35.8	1.41	52.3	2.06							
H-300			12mm LET-LOK	12mm LET-LOK	71.6	2.82	35.8	1.41	35.8	1.41	35.8	1.41	52.3	2.06							
H-310			1/4" FNPT	1/4" FNPT	54.0	2.12	27.0	1.06	27.0	1.06	27.0	1.06	43.5	1.71							
H-310			1/4" FBSPT	1/4" FBSPT	54.0	2.12	27.0	1.06	27.0	1.06	27.0	1.06	43.5	1.71							
H-380			3/8" MNPT	3/8" MNPT	57.0	2.24	28.5	1.12	28.5	1.12	28.5	1.12	45.0	1.77							
H-385			1/4" MNPT	1/4" FNPT	58.5	2.30	31.5	1.24	27.0	1.06	28.5	1.12	43.5	1.71							
H-385			3/8" MNPT	3/8" FNPT	56.5	2.22	28.5	1.12	28.0	1.10	28.5	1.12	44.5	1.75							
H-395			3/8" MNPT	3/8" LET-LOK	61.5	2.42	28.5	1.12	33.0	1.30	28.5	1.12	49.5	1.95							
H-300	9.5 (0.375)	1.8	3/4" LET-LOK	3/4" LET-LOK	97.0	3.82	48.5	1.91	48.5	1.91	48.5	1.91	68.5	2.70	19.5 (0.77")	20.0 (0.79")	47.8 (1.88")	26.0 (1.02")	105.6 (4.16")	30.2 (1-3/16")	22.0 (0.87")
H-310			3/8" FNPT	3/8" FNPT	76.2	3.00	38.1	1.50	38.1	1.50	38.1	1.50	58.1	2.29							
H-310			1/2" FNPT	1/2" FNPT	76.2	3.00	38.1	1.50	38.1	1.50	38.1	1.50	58.1	2.29							
H-380			1/2" MNPT	1/2" MNPT	76.2	3.00	38.1	1.50	38.1	1.50											
H-385			1/2" MNPT	1/2" FNPT	76.2	3.00	38.1	1.50	38.1	1.50											

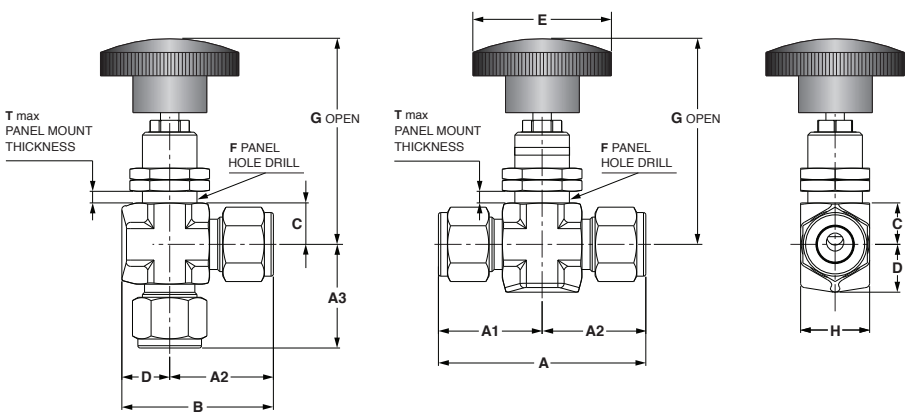

STEM OPTIONS

H-300U needle valves are available with a choice of stem tips:

8A Regulating: Used where some degree of flow control is required.

8B V-Stem: Standard stem tip used for on/off operation in general-purpose liquids and gas service.

8C Non-Rotating Stem: Typically used in high-cycle applications to extend valve life and prevent stem rotation inside the body tip, a suitable selection for gaseous high pressure applications.

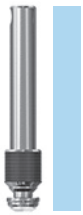

8D Soft Seat: A soft seat tip requires lower seating torque than a metal stem tip; the best choice for clean gaseous high pressure applications; MAWT is 200°F (93°C).

FLOW DATA: FLOW COEFFICIENT VS. HANDLE TURNS

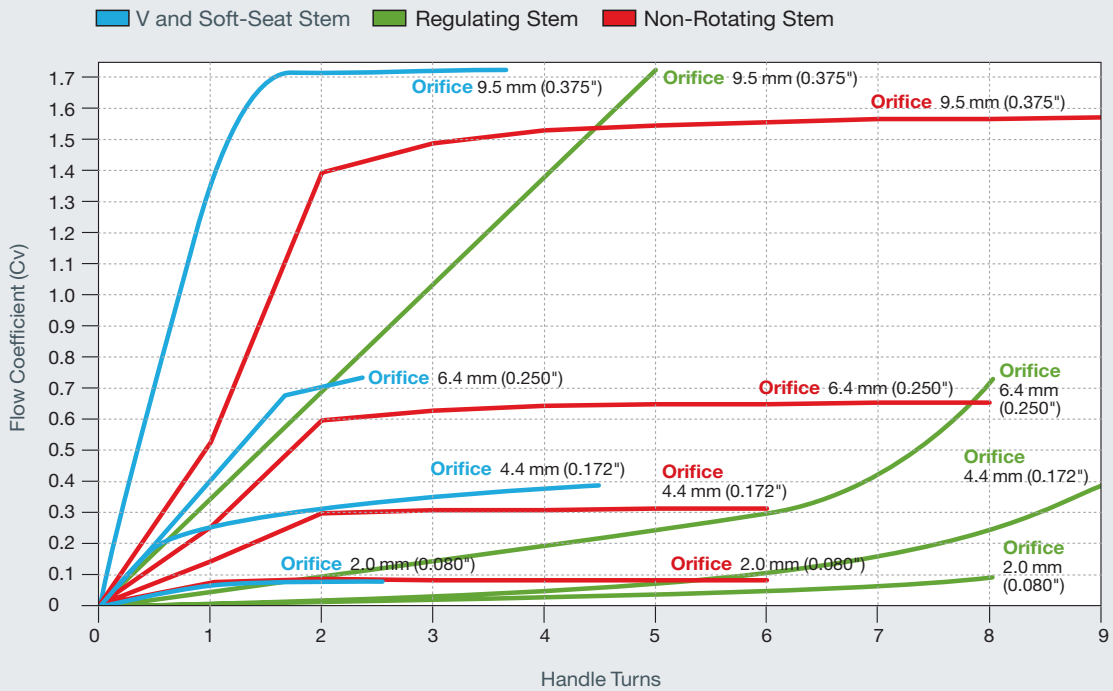

PRESSURE TEMPERATURE RATING

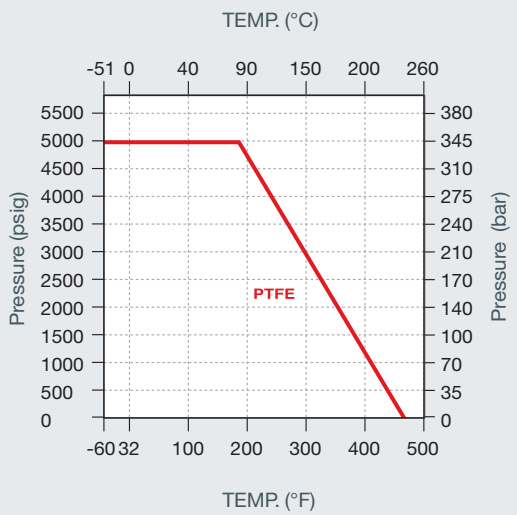

TECHNICAL DATA

The following table contains the temperature and pressure ratings for a standard valve with PTFE packing.

Body Material	Stem Type	Rating	
		Temperature	Pressure
316 St.St.	All St.St. Stems	-46°C to 230°C (-51°F to 446°F)	5000 psi
	Kel-F	-46°C to 93°C (-51°F to 200°F)	5000 psi
Brass	Regulating & V-Stem	-46°C to 200°C (-51°F to 392°F)	3000 psi
	Kel-F	-46°C to 93°C (-51°F to 200°F)	3000 psi

* Extreme temperature fluctuations may require packing adjustment.

Notes:

- The H-300U was designed for high pressure services were moderately uncontaminated media is used.
- For steam applications, it is recommended to select one of HAM-LET severe service needle valves.
- For oxygen applications, select the oxygen clean treatment option. For relatively high pressure pure oxygen applications, assure that the selected valve is tested and found to meet the specific application requirements.

CLEANING & PACKAGING

HAM-LET H-300U Needle Valve is treated with Passivation Cleaning and Packaging (Procedure 8075).
Oxygen Cleaning and Packaging (Procedure 8055) is available as an option.

TESTING

The H-300U Series Needle Valve design has been tested for Proof and Burst. Every H-300U Needle Valve is factory tested with nitrogen at 1000 psi (69 bar).
The maximum allowable leakage across seat is 0.1 std cc/min.

PACKING ADJUSTMENT

Due to the varied service applications of the valve, packing adjustment may be occasionally necessary. Packing is factory adjusted to 1000 psig service. Initial packing adjustment is recommended after installation and prior to start-up. See packing adjustment procedure No.3901882 on the website.

H-300U SERIES ORDERING INFORMATION

H-3 00U - SS - L - V - 1/4 - RS - OPTIONAL

Valve Series

Valve Type

00 -	LET-LOK® End
10 -	Female End
80 -	Male End
85 -	Male to Female End
95 -	Male to LET-LOK®

Body Material

SS	- 316SS
B	- Brass

End Connection

L	- LET-LOK®
N	- NPT
R	- ISO Tapered
NL	- NPT to LET-LOK®
HL	- Single Ferrule
G	-ISO Parallel
GL	- Face Seal Ends

Stem Designator

V	
R	- Regulating Stem
K	- Soft Seat Kel-F Stem
NR	- Non-Rotating Stem

End Connection Size

1/8	3MM
1/4	6MM
3/8	8 MM
1/2	10MM
3/4	12MM

Handle Type

RS	-Black Plastic
RAS	-Black Aluminum
RAR	-Red Aluminum
RAB	-Blue Aluminum
RAG	-Green Aluminum
RAY	-Yellow Aluminum
M	-Metal Bar SS316L

Pattern Designator

Blank	- Straight
A	- Angle

Treatment

BLANK	- Standard Cleaning & Passivation
OC	- Oxygen Clean
LF	- Lubricant Free

Spare Round-Handle Kits are available for each valve.

SPARE KITS

Series	End Size	Seal Kit*	Handle Kit**
H-380U Male to Male	1/8, 1/4	Z-300U-SK-1/4-P	Z-300U-HK-1/4- ☐
	3/8	Z-300U-SK-1/2-P	Z-300U-HK-1/2- ☐
	1/2, 3/4	Z-300U-SK-3/4-P	Z-300U-HK-3/4- ☐
H-310U Female to Female	1/8	Z-300U-SK-1/4-P	Z-300U-HK-1/4- ☐
	1/4	Z-300U-SK-1/2-P	Z-300U-HK-1/2- ☐
	3/8, 1/2	Z-300U-SK-3/4-P	Z-300U-HK-3/4- ☐
H-395U Male to Let-Lok	1/8, 1/4	Z-300U-SK-1/4-P	Z-300U-HK-1/4- ☐
	3/8	Z-300U-SK-1/2-P	Z-300U-HK-1/2- ☐
H-385U Male to Female	1/4	Z-300U-SK-1/2-P	Z-300U-HK-1/2- ☐
	3/8	Z-300U-SK-1/2-P	Z-300U-HK-1/2- ☐
	1/2	Z-300U-SK-3/4-P	Z-300U-HK-3/4- ☐
H-300U Let-Lok	1/8, 1/4, 3MM, 6MM, 8MM	Z-300U-SK-1/4-P	Z-300U-HK-1/4- ☐
	3/8, 1/2, 10MM, 12MM	Z-300U-SK-1/2-P	Z-300U-HK-1/2- ☐
	3/4	Z-300U-SK-3/4-P	Z-300U-HK-3/4- ☐

*Seal Kit contains packing, Belleville washers and packing instructions
**Handle Kit contains handle and set screw.

☐ Handle type per "How to Order"

Warning! For your safety
The system designer and user have the sole responsibility for selecting products suitable for their special application requirements, ensuring their safe and trouble-free installation, operation, and maintenance. Application details, material compatibility and product ratings should all be considered for each selected product. Improper selection, installation or use of products can cause property damage or personal injury.

H-300U, Rev.00, July 2011

TOGGLE VALVES

H-1200 SERIES

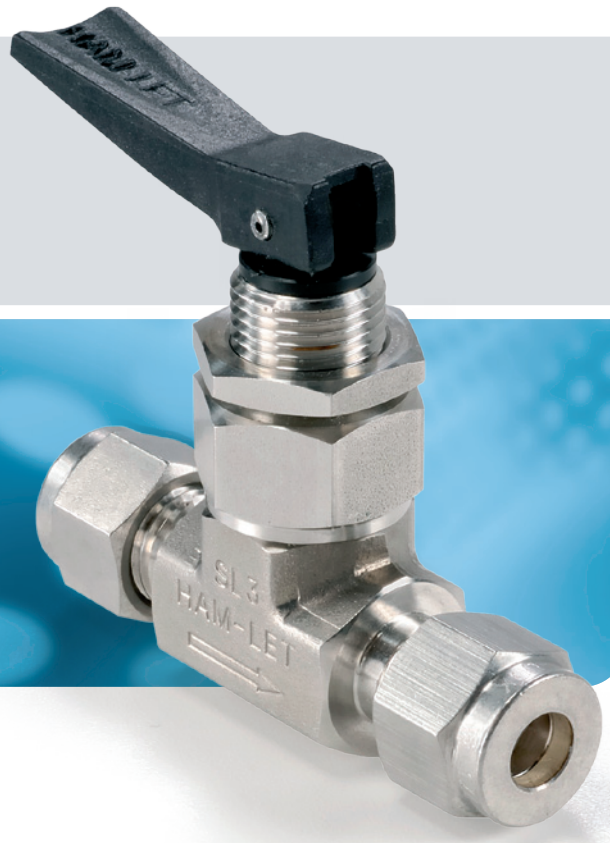

HAM-LET®
ADVANCED CONTROL TECHNOLOGY

FEATURES

- Compact Rugged Design
- Stainless Steel and Brass Construction
- Panel Mountable
- Quick On/Off Service
- Straight and Angle Patterns available
- Sizes: 1/8" & 1/4"
- LET-LOK , Male and Female NPT ends
- MAWP 300 psig at 20°C (70°F)
- Temperature rating: -20°F-200°F (-28°C-93°C)
- Flow coefficient (Cv) 0.11 to 0.2
- Colored Nylon Handles

GENERAL

The H-1200 Series standard toggle valve is a compact design for normally closed and quick on/off service. Moving the handle 90 degrees upwards opens the valve to full flow and stops it firmly in the open position. Shifting the handle position downwards shuts off the valve by spring return. The PTFE soft seat at the tip of the stem provides a positive repetitive seal.

MATERIALS OF CONSTRUCTION

Item	Components	Qty.	Valve Body Material	
			316 St.St.	Brass
1	Handle	1	Nylon	
2	Roll Pin	1	St.St. 420 SS	
3	Panel Nut	1	St.St. ASTM A-276	Brass ASTM B-16
4	Washer	1	Nylon	
5	Packing Nut	1	St.St. ASTM A-276	Brass ASTM B-16
6	Thrust Washer	1	N/A	Nylon
7	Spring	1	302SS / A313	
8	O-ring	1	Viton® (Fluorocarbon FKM)	
9	Stem	1	St.St. ASTM A-276	
10	Stem Seat	1	PTFE	
11	Body	1	St.St. ASTM A-182	Brass ASTM B-283

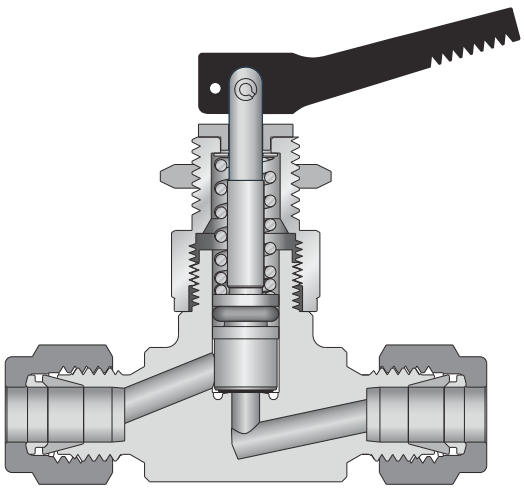

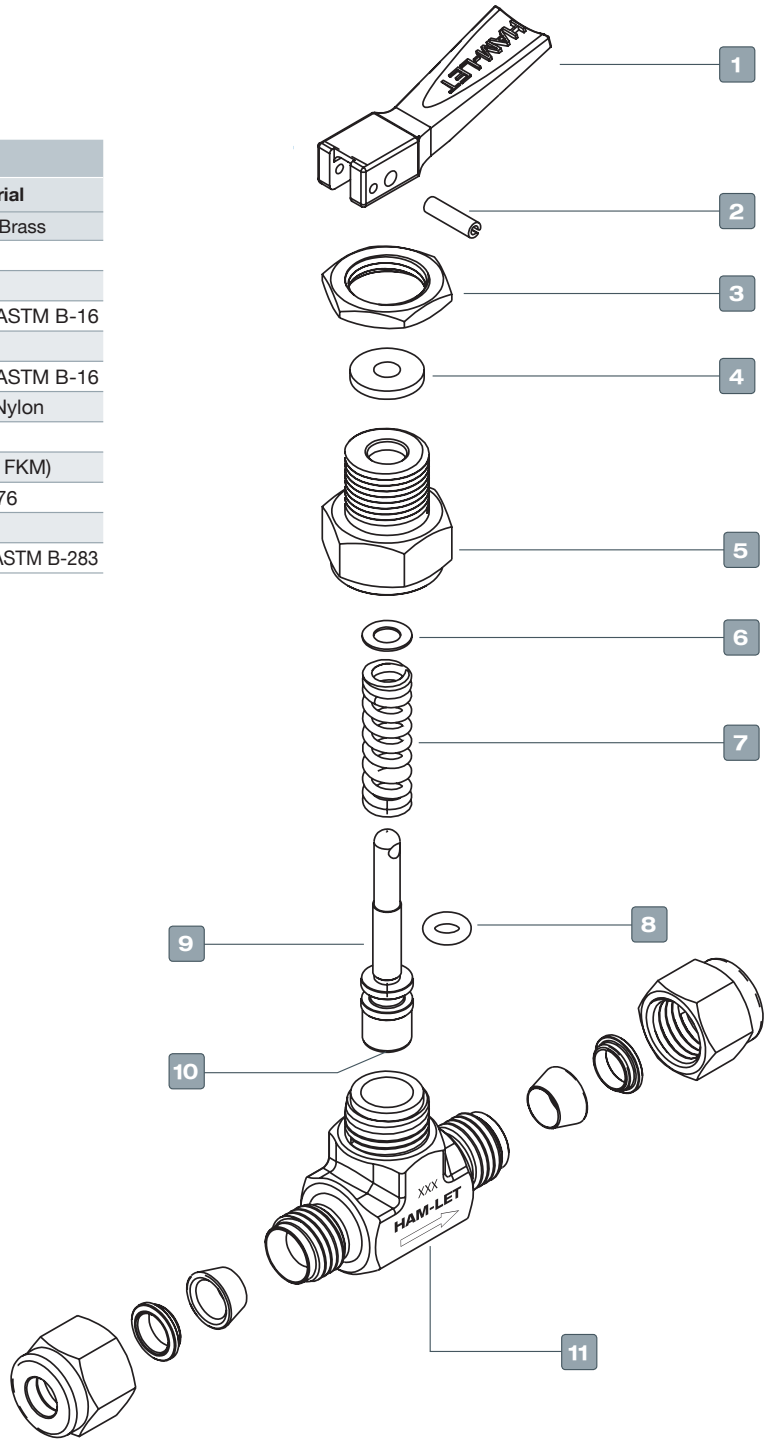

TESTING

All H-1200 Series designs have been tested and approved for Burst and Proof. All valves are factory tested with Nitrogen pressure at 300 psig (20.7 bar) for shell, stem and across-the-seat leak detection. Each valve is tested for leak tight performance.

CLEANING & PACKAGING

HAM-LET H-1200 valves are treated with Passivation Cleaning and Packaging (Procedure 8075). Other treatments are available upon request.

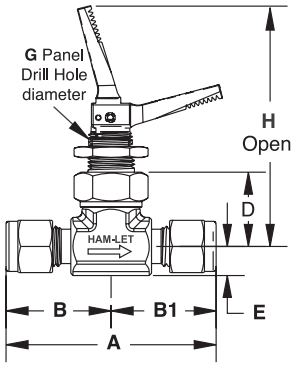

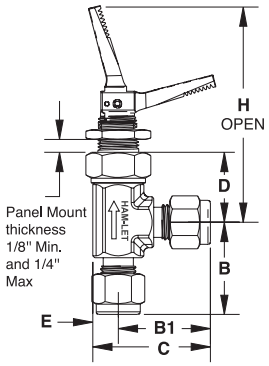

STANDARD CONFIGURATION DIMENSIONS

End connection		Cv	Orifice		A		B		B1		C		D		E		G		H (Open)	
Type	Size		mm	in	mm	in	mm	in	mm	in	mm	in	mm	in	mm	in	mm	in	mm	in
Female NPT	1/8	0.20	3.28	0.13	41.2	1.66	20.6	0.81	20.6	0.81	N/A	N/A	21.8	0.85	7.95	0.31	13.5	0.53	65.5	2.57
Male NPT	1/8	0.11	2.50	0.10	43.7	1.72	21.8	0.86	21.9	0.86	29.7	1.17								
Male NPT	1/4	0.20	3.28	0.13	49.8	1.96	24.9	0.98	24.9	0.98	32.8	1.29								
Let-Lok	1/8	0.11	2.30	0.09	49.8	1.96	24.9	0.98	24.9	0.98	32.8	1.29								
Let-Lok	1/4	0.20	3.28	0.13	57.4	2.26	28.7	1.13	28.7	1.13	36.5	1.44								
Male to Let-Lok	1/4	0.20	3.28	0.13	53.6	2.11	24.9	0.98	28.7	1.13	32.8	1.29								

H-1200 SERIES ORDERING INFORMATION

OPTIONAL

H - 12 00 - SS - N - 1/8 - S - - - -

Valve Series

Valve Type

00	- LET-LOK® Ends
80	- Male NPT Ends
95	- Male to LET-LOK® Ends

Body Material

SS	- 316 SS
B	- Brass

End Connection

L	- LET-LOK®
N	- NPT

Size Designator

3 mm	1/8
6 mm	1/4

Pattern Designator

S	- Straight
A	- Angle

Handle Type

Blank	Black Nylon Handle
RH	Red Nylon Handle
BH	Blue Nylon Handle
YH	Yellow Nylon Handle
GH	Green Nylon Handle
OH	Orange Nylon Handle

O-ring Material

BU	- Buna N
EP	- EPDM
NE	- Neoprene
KZ	- Perfluor

Viton® O-ring is standard

Treatment

BLANK	- Standard Cleaning & Passivation
OC	- Oxygen Clean
LF	- Lubricant Free

SEAL KIT

Z - 1200 - SK - 1/4 - VI

Body Designator per End Connection

1/4 for all ends connections

O-ring Material

VI	- Viton®
BU	- Buna N
EP	- EPDM
NE	- Neoprene
KZ	- Perfluor

HANDLE KIT

Z - 1200 - HK - 1/4 - S

Body Designator per End Connection

1/4 for all ends connections

Handle Type

S	Black Nylon Handle
R	Red Nylon Handle
B	Blue Nylon Handle
Y	Yellow Nylon Handle
G	Green Nylon Handle
O	Orange Nylon Handle

Warning! For your safety

The system designer and user have the sole responsibility for selecting products suitable for their special application requirements, ensuring their safe and trouble-free installation, operation, and maintenance. Application details, material compatibility and product ratings should all be considered for each selected product. Improper selection, installation or use of products can cause property damage or personal injury.

Viton® - TM DuPont

H-1200, Rev.07, July 2011

METERING VALVES

H-1300 & MBV SERIES

MBV Series: Pat. Pending
No. 61/376,682

HAM-LET®
ADVANCED CONTROL TECHNOLOGY

H, HF & HXF-1300 SERIES FEATURES

- Forged-body 316 St.St.or Brass Construction
- Straight and Angle Patterns and Panel Mounting
- MAWP 2000 psig - (138 bar) For HXF
- MAWP 1000 psig - (69 bar) For H, HF
- MAWT 400°F (204°C)
- Flow coefficients (Cv) from 0.004 to 0.15
- Round & Slotted Handles with Screwdriver Slots
- HAM-LET LET-LOK® Ends, Male & Female NPT, HTC® Face Seal Bead End Connections
- 1°, 3° and 5° Stem Taper for required flow control
- Stem with Stopper Shoulder for maximum life

GENERAL

The H-1300 Series is a moderate-pressure instrumentation flow-regulating needle valve. It is generally used for instrumentation panels, sampling systems and accurate applications.
The valves are compact in size and structure and offer reliable low and moderate flow regulation with long service life.

HXF-1300 MATERIALS OF CONSTRUCTION

Item No.	Components	Qty	Valve Body Material	
			316 St.St.	Brass
1	Handle Set Screw	1	18-8 Stainless Steel	
2	Flow Fixing Screw	1	18-8 Stainless Steel	
3	Handle	1	St.St. ASTM A-276	Brass ASTM B-16
4	Panel Nut	1	St.St. ASTM A-276	Brass ASTM B-16
5	Safety Bonnet Sleeve	1	St.St. ASTM A-276	Brass ASTM B-16
6	Bonnet	1	St.St. ASTM A-276	Brass ASTM B-16
7	Stem	1	St.St. 174PH/A564	
8	Stem Ring	1	Glass-filled TFE	
9	O-ring	1	Viton® (fluorocarbon)	
10	Guide Ring	1	Glass-filled TFE	
11	Orifice	1	St.St. ASTM A-276	Brass ASTM B-16
12	Body	1	St.St. ASTM A-182	Brass ASTM B-283

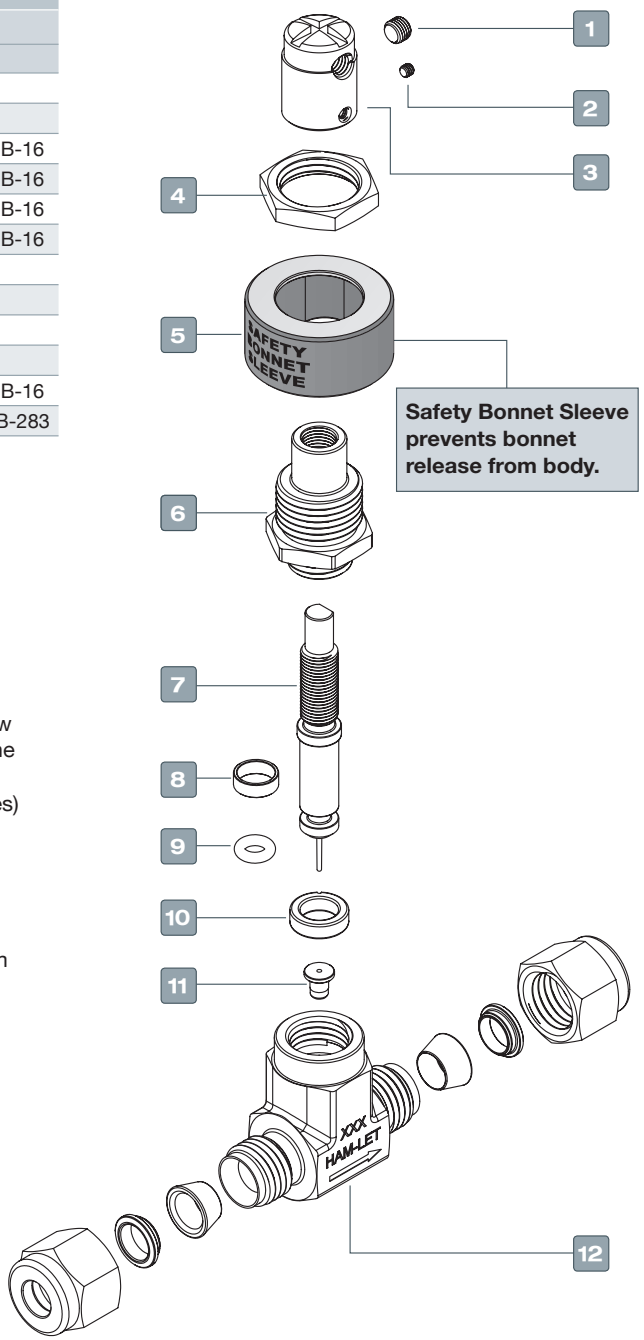

HXF SERIES STRAIGHT VALVE

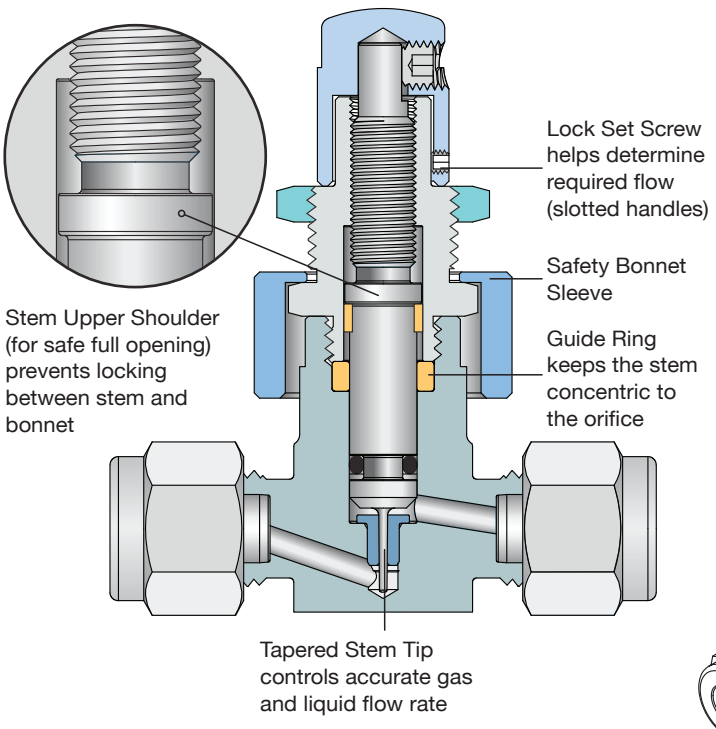

CLEANING & PACKAGING

HAM-LET H-1300 Metering Valve is treated with HAM-LET Passivation Cleaning and Packaging (Procedure 8075).
HAM-LET H-1300 Ball valves with face-seal end connections are treated with Oxygen Cleaning and Packaging (Procedure 8075).

H&HF-1300 MATERIALS OF CONSTRUCTION				
Item No.	Components	Qty	Valve Body Material	
			316 St.St.	Brass
1	Handle Set Screw	1	St.St. ASTM A-276	Brass ASTM B-16
2	Flow Fixing Screw	1	18-8 Stainless Steel	
3	Handle	1	St.St. ASTM A-276	
4	Panel Nut	1	St.St. ASTM A-276	Brass ASTM B-16
5	Safety Bonnet Sleeve	1	St.St. ASTM A-276	Brass ASTM B-16
6	Bonnet	1	St.St. ASTM A-276	Brass ASTM B-16
7	Stem	1	St.St. 174PH/A564	
8	O-ring	1	Viton® (fluorocarbon)	
9	Guide Ring	1	Glass-filled TFE	
10	Body	1	St.St. ASTM A-182	Brass ASTM B-283

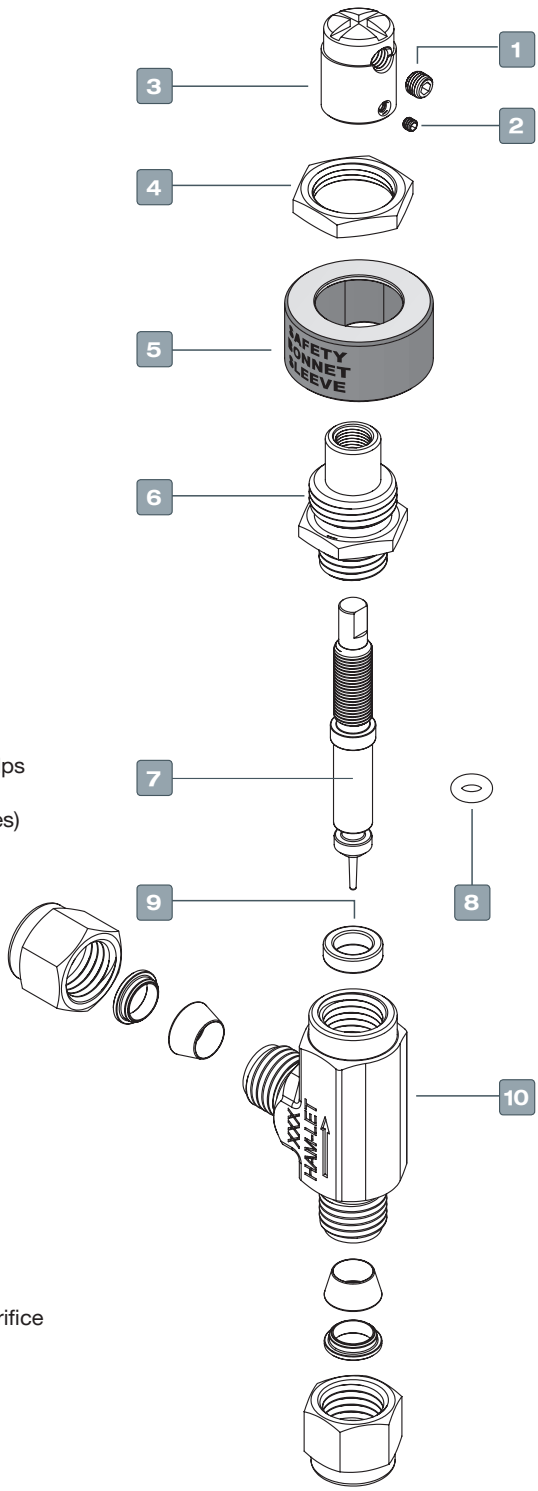

HF SERIES ANGLE VALVE

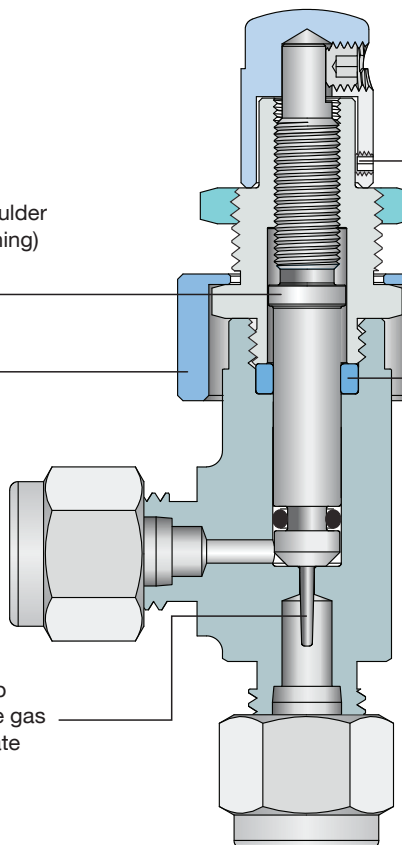

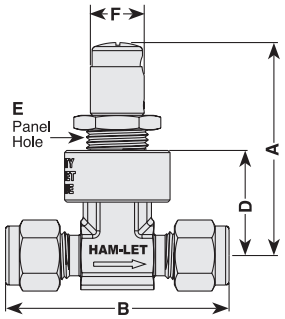

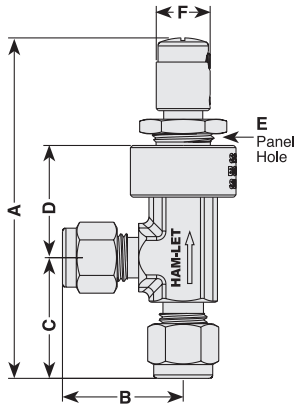

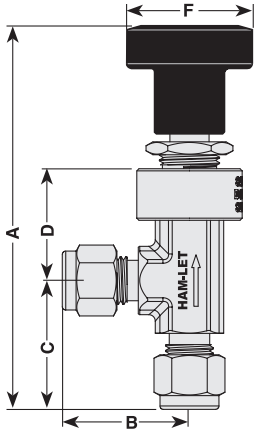

STANDARD CONFIGURATION DIMENSIONS

Basic Ordering Number	Stem Taper Angle	Orifice mm/in	Cv	Inlet	Outlet	A-Open mm	A-Open in	B mm	B in	C mm	C in	D mm	D in	E mm	E in	F
H-1300 Angle	50	3.3mm 0.13"	0.13 Max	1/4'' LET-LOK®	1/4'' LET-LOK®	95.7	3.77	29.6	1.17	30.0	1.18	26.0	1.02	14.8	0.58	29 mm 1.14''
				6MM LET-LOK®	6MM LET-LOK®	95.7	3.77	29.6	1.17	30.0	1.18	26.0	1.02	14.8	0.58	
H-1300 Straight				1/4'' LET-LOK®	1/4'' LET-LOK®	71.5	2.81	59.5	2.34	-	-	32.0	1.26	14.8	0.58	
				3/8'' LET-LOK®	3/8'' LET-LOK®	71.5	2.81	62.4	2.46	-	-	32.0	1.26	14.8	0.58	
				6MM LET-LOK®	6MM LET-LOK®	71.5	2.81	59.5	2.34	-	-	32.0	1.26	14.8	0.58	
				1/4'' Male NPT	1/4'' Male NPT	71.5	2.81	50.8	2.00	-	-	32.0	1.26	14.8	0.58	
H-1300 Angle	30	1.4mm 0.055"	0.03 Max	1/8'' LET-LOK®	1/8'' LET-LOK®	83.5	3.29	25.8	1.02	25.8	1.02	27.0	1.06	14.8	0.58	
				1/4'' LET-LOK®	1/4'' LET-LOK®	85.0	3.35	28.0	1.10	28.0	1.10	27.0	1.06	14.8	0.58	
				3MM LET-LOK®	3MM LET-LOK®	83.5	3.29	25.8	1.02	25.8	1.02	27.0	1.06	14.8	0.58	
				6MM LET-LOK®	6MM LET-LOK®	85.0	3.35	28.0	1.10	28.0	1.10	27.0	1.06	14.8	0.58	
				1/8'' Male NPT	1/8'' Male NPT	77.0	3.03	19.0	0.75	19.0	0.75	27.0	1.06	14.8	0.58	
				1/4'' Male NPT	1/4'' Male NPT	83.0	3.27	25.0	0.98	26.0	1.02	27.0	1.06	14.8	0.58	
				1/8'' Male NPT	1/8'' LET-LOK®	77.0	3.03	25.8	1.02	19.0	0.75	27.0	1.06	14.8	0.58	
				1/4'' Male NPT	1/4'' LET-LOK®	81.5	3.2	28.3	1.11	23.5	0.92	27.0	1.06	14.8	0.58	
				1/8'' Female NPT	1/8'' Female NPT	82.5	3.25	24.9	0.98	24.9	0.98	27.0	1.06	14.8	0.58	
HF-1300 Straight				1/8'' LET-LOK®	1/8'' LET-LOK®	70.6	2.78	51.3	2.02	-	-	27.0	1.06	14.8	0.58	12.5 mm 0.5''
				3MM LET-LOK®	3MM LET-LOK®	70.6	2.78	51.3	2.02	-	-	27.0	1.06	14.8	0.58	
				6MM LET-LOK®	6MM LET-LOK®	70.6	2.78	55.9	2.20	-	-	27.0	1.06	14.8	0.58	
				1/4" LET-LOK®	1/4" LET-LOK®	70.6	2.78	55.9	2.20	-	-	27.0	1.06	14.8	0.58	
				1/8'' Male NPT	1/8'' Male NPT	70.6	2.78	38.1	1.50	-	-	27.0	1.06	14.8	0.58	
				1/4'' Male NPT	1/4'' Male NPT	70.6	2.78	49.8	1.96	-	-	27.0	1.06	14.8	0.58	
				1/8'' Female NPT	1/8'' Female NPT	70.6	2.78	49.3	1.94	-	-	27.0	1.06	14.8	0.58	
				1/4''' Male Face Seal	1/4'' Male Face Seal	70.6	2.78	52.3	2.06	-	-	27.0	1.06	14.8	0.58	
HXF-1300 Angle	10	0.8 mm 0.03''	0.004 Max	1/8'' LET-LOK®	1/8'' LET-LOK®	84.4	3.23	24.8	0.98	24.8	0.98	23.4	0.92	14.8	0.58	12.5 mm 0.5''
				1/4'' LET-LOK®	1/4'' LET-LOK®	85.0	3.35	26.0	1.02	26.0	1.02	23.4	0.92	14.8	0.58	
				3MM LET-LOK®	3MM LET-LOK®	84.4	3.32	24.8	0.98	24.8	0.98	23.4	0.92	14.8	0.58	
				1/8'' Male NPT	1/8'' LET-LOK®	77.5	3.05	24.8	0.98	24.8	0.98	23.4	0.92	14.8	0.58	
				1/4'' Male NPT	1/4'' LET-LOK®	82	3.22	27.3	1.07	24.8	0.98	23.4	0.92	14.8	0.58	
				1/8'' Male NPT	1/8'' Male NPT	84.4	3.32	24.9	0.98	24.9	0.98	23.4	0.92	14.8	0.58	
				1/4'' Male NPT	1/4'' Male NPT	84.4	3.32	24.9	0.98	24.9	0.98	23.4	0.92	14.8	0.58	
HXF-1300 Straight				1/8'' LET-LOK®	1/8'' LET-LOK®	59.6	2.34	48.0	1.89	-	-	24.4	0.96	14.8	0.58	12.5 mm 0.5''
				1/4'' LET-LOK®	1/4'' LET-LOKv	59.6	2.34	51.9	2.04	-	-	24.4	0.96	14.8	0.58	
				3MM LET-LOK®	3MM LET-LOK®	59.6	2.34	48.0	1.89	-	-	24.4	0.96	14.8	0.58	
				6MM LET-LOK®	6MM LET-LOK®	59.6	2.34	51.9	2.04	-	-	24.4	0.96	14.8	0.58	
				1/4'' Male NPT	1/4'' Male NPT	59.6	2.34	48.0	1.89	-	-	24.4	0.96	14.8	0.58	
				1/4'' Male Face Seal	1/4'' Male Face Seal	59.6	2.34	52.0	2.05	-	-	24.4	0.96	14.8	0.58	

Dimensions are for reference only, and are subject to change.

MAX PANEL THICKNESS

"HXF" Series - 4.3 mm (0.17'')
"H" and "HF" - 3.3 mm (0.13'')

TESTING

The H, HF and HXF Series metering valve designs have been tested for Proof and Burst.

Every H,HF & HXF-1300 metering valve is factory tested for proper assembly, using leak detection.

FLOW SETTING

H-1300 series metering valve is tested for bubble tight shut-off at 100 psig (6.8 bar) differential pressure.

HF-1300 series metering valve handle dead stop is set at 4 to 10 std cm3/min with 5 psig (0.34 bar) inlet pressure.

HXF-1300 series metering valve handle dead stop is set at 4 to 10 std cm3/min with 15 psig (1.0 bar) inlet pressure.

FLOW DATA AT 70°F (20°C)

H-1300 METERING VALVE 5° STEM

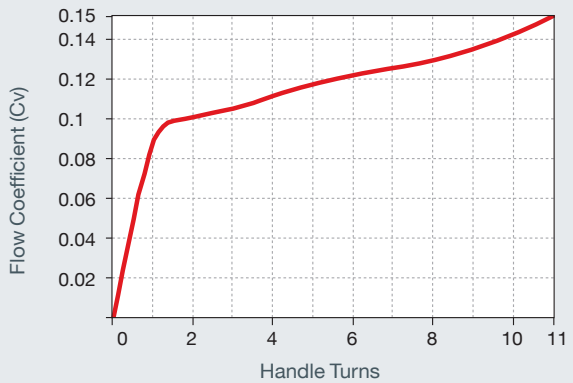

	Pressure Drop to Atmosphere psi (bar)	Water Flow U.S gal/min (L/min)	Air flow stb ft3 / min (stb L / min)
Maximum Flow Coefficient (Cv) 0.15	10 (0.68)	0.47 (1.7)	1.6 (45.3)
	50 (3.4)	1.0 (3.7)	4.5 (127)
	100 (6.8)	1.5 (5.6)	7.9 (223)

HF-1300 METERING VALVE 3° STEM

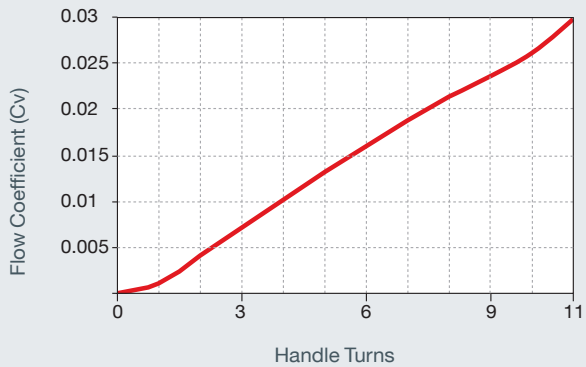

	Pressure Drop to Atmosphere psi (bar)	Water Flow U.S gal/min (L/min)	Air flow stb ft3 / min (stb L / min)
Maximum Flow Coefficient (Cv) 0.03	10 (0.68)	0.09 (0.34)	0.33 (9.3)
	50 (3.4)	0.21 (0.79)	0.9 (25.4)
	100 (6.8)	0.3 (1.1)	1.5 (42.4)

HXF-1300 METERING VALVE 1° STEM

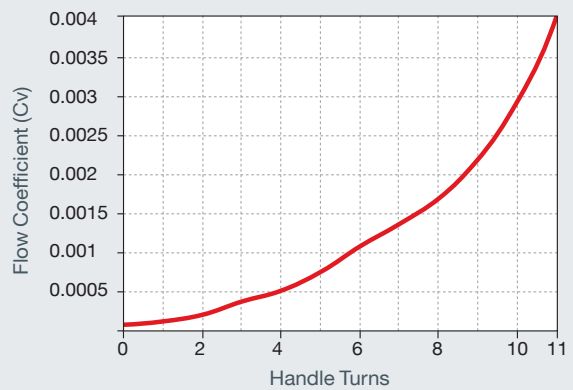

	Pressure Drop to Atmosphere psi (bar)	Water Flow U.S gal/min (L/min)	Air flow stb ft3 / min (stb L / min)
Maximum Flow Coefficient (Cv) 0.004	10 (0.68)	0.01 (0.03)	0.04 (1.1)
	50 (3.4)	0.02 (0.07)	0.1 (2.8)
	100 (6.8)	0.04 (0.15)	0.2 (5.5)

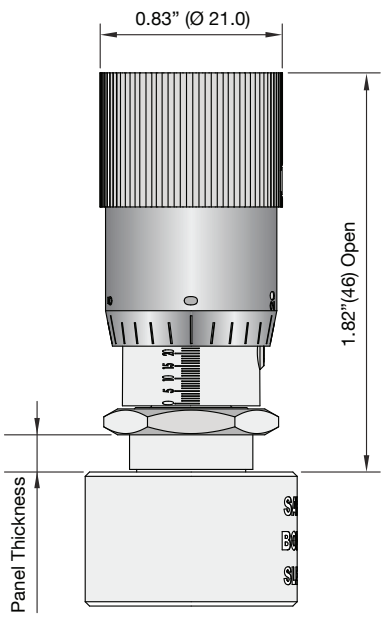

TECHNICAL DATA							
Series	Pressure - Temperature Ratings			Orifice		Shutoff Service	Angle
	*O-ring Material	Temperature Rating °F (°C)	Pressure psig (bar)	inch	mm		
H	Buna N	-10 to 300 (-23 to 149)	1000 (68.9)	0.13	3.3	*Yes	5°
	Ethylene Propylene	-10 to 300 (-23 to 149)					
HF	Viton® (Fluorocarbon)	-15 to 400 (-26 to 204)	1000 (68.9)	0.055	1.4	No	3°
	Perfluor	-0 to 300 (-18 to 149)					
HXF	Neoprene	-10 to 250 (-23 to 121)	2000 (138)	0.03	0.8	No	1°

Viton® (Fluorocarbon) is a standard O-ring for H,HF,HXF-1300

***Shutoff Service:** In Stainless Steel constructions only.
H-1300 Series valves are not recommended for shutoff
in vacuum or gas service or for repetitive shutoff in liquid service.

HANDLE OPTIONS

Vernier Handle

Optional for H, HF & HXF

Round Aluminum Handle*

Standard for H

* Black is Standard.
Colored Handles are available upon request, see "Ordering Information"

Metal Slotted Handle

Standard for HF

Metal Slotted Handle

Standard for HXF

METERING BALL VALVE MBV SERIES

FEATURES

- On/Off and Metering service
- PFA Encapsulated Ball Stem design
- Panel Mounting as standard
- MAWP 2000 psi (138 bar) for HXF
- MAWP 1000 psi (69 bar) for H, HF
- MAWT 300°F (150°C)
- End Connections: LET-LOK 1/16”, 1/8”, 1/4”, 3/8”; FNPT 1/8”; MNPT 1/8”, 1/4”; Male Face Seal 1/4”
- 1°, 3° and 5° Stem Taper for required flow control
- Stem with Stopper shoulder for long life service

GENERAL

The Shut-off Metering Ball Valve Series provides the highest degree of precision metering for moderate pressure applications.
This series features innovative and unique shut-off capability and allows full control of the process from complete shut-off to extra fine regulation.
A choice of three precision stem tapers enables metering at flow capacities as low as CV= 0.001 with up to 11 handle turns.
This valve is the ultimate solution for precision flow control.

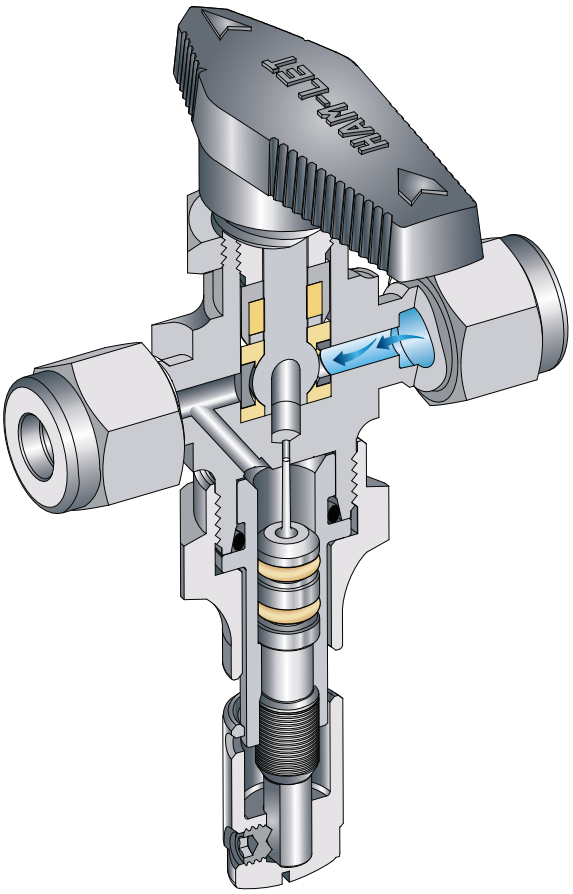

MBV CLOSE POSITION

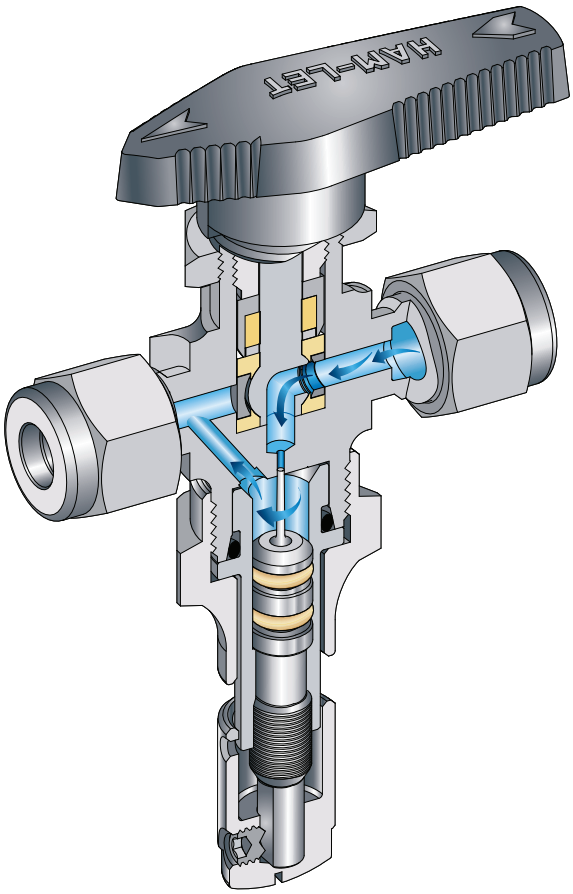

MBV OPEN POSITION

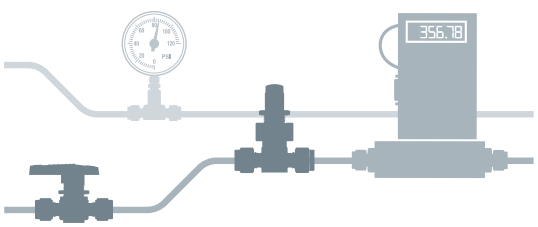

Old concept

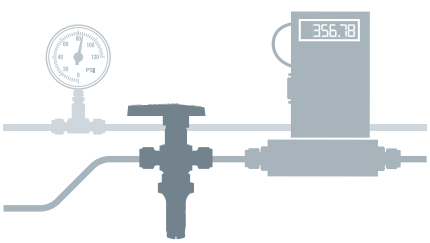

New concept

METERING BALL VALVE DIMENSIONS

Basic Ordering Number	Stem Taper Angle	Orifice		Cv	End Connections	A		B Open		C		D		E Max		F Diameter		G		H		J		K Open Position	
		mm	in			mm	in	mm	in	mm	in	mm	in	mm	in	mm	in	mm	in	mm	in	mm	in	mm	in
H-1300	50	3.3	0.13	0.13 Max.	1/4" LET-LOK	56.1	2.21	65.7	2.59	34.8	1.37	8.6	0.34	5.9	0.23	15.1	0.59	31.0	1.22	29.0	1.14	21.1	0.83	72.0	2.83
HF-1300	30	1.4	0.055	0.03 Max.	1/4" LET-LOK	56.1	2.21	60.0	2.36	34.8	1.37	8.6	0.34	5.9	0.23	15.1	0.59	31.0	1.22	12.5	0.49	21.1	0.83	72.0	2.83
HXF-1300	10	0.8	0.03	0.004 Max.	1/4" LET-LOK	56.1	2.21	60.0	2.36	34.8	1.37	8.6	0.34	5.9	0.23	15.1	0.59	31.0	1.22	12.5	0.49	21.1	0.83	72.0	2.83

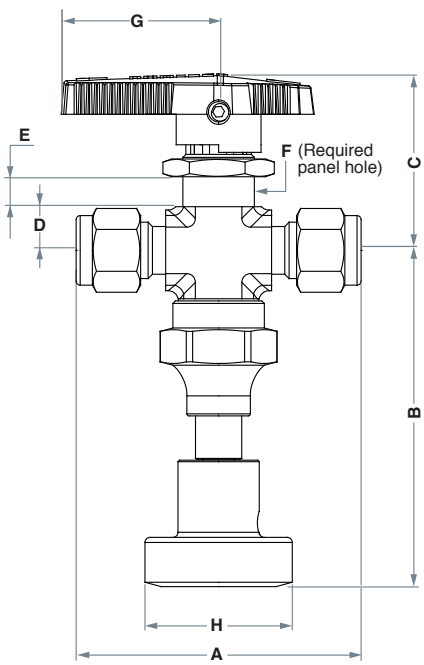

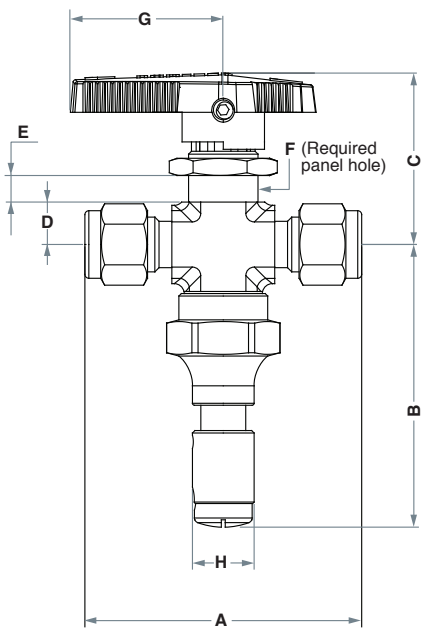

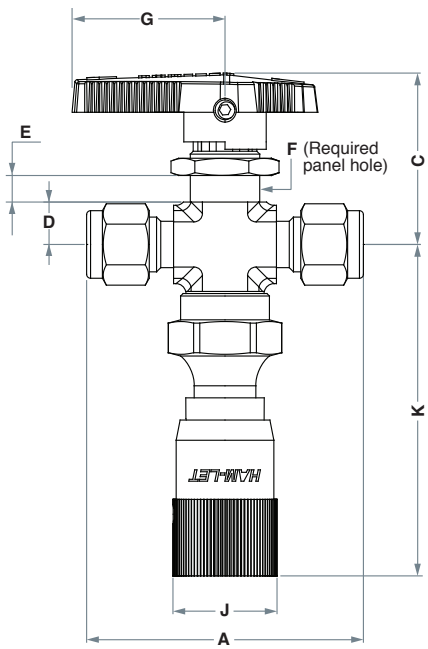

H-1300 ORDERING INFORMATION

OPTIONAL

H-13 - 00 - SS - L - 1/4 - S - [ ] - [ ] - [ ]

Valve Series

H-13	- 5° stem taper
HF-13	- 3° stem taper
HXF-13	- 1° stem taper

End Connection

L	- LET-LOK®
N	- Threaded NPT
GL	- Male Face Seal
HL	- ONE-LOK®

O-ring Material

EP	- EPDM,
NE	- Neoprene
KZ	- Perfluor
BU	- Buna-N

Viton® O-rings are standard

Valve Type

00	- LET-LOK® End
10	- Female End
80	- Male End
95	- Male to LET-LOK® End

End Connection Size

1/6	
1/8	3 MM
1/4	6 MM
3/8	

Handle Options

VER	- Vernier Handle
RH	- Red Aluminum Handle*
YH	- Yellow Aluminum Handle*
GH	- Green Aluminum Handle*
BH	- Blue Aluminum Handle*

* for H-1300 only

Body and Ends Material

SS	- St.St. 316
B	- Brass

Pattern Valve Type

S	- Straight Port Valve
A	- Angle Port Valve
800	- MBV Configuration

Treatment

BLANK	- Standard Cleaning & Passivation
OC	- Oxygen Clean
LF	- Lubricant Free

SEAL KIT

Seal Kit contains O-ring

Z - 1300 - SK - 1/4 - VI

Body Designator per end connection

1/4	for all end connections

O-Ring material

VI	VITON®
EP	EPDM
NE	Neoprene
KZ	Perfluor
BU	Buna-N

HANDLE KIT

Handle Kit contains handle + set screw.

Z - 1300 - HK - 1/4 - VER

Handle Options

1/4	for all end connections

Handle Options

VER	- Vernier Handle
RH	- Red Aluminum Handle*
YH	- Yellow Aluminum Handle*
GH	- Green Aluminum Handle*
BH	- Blue Aluminum Handle*
M	- Metal slotted Handle**

* for H-1300 only
**for HF & HXF-1300 only

Warning! For your safety
The system designer and user have the sole responsibility for selecting products suitable for their special application requirements, ensuring their safe and trouble-free installation, operation, and maintenance. Application details, material compatibility and product ratings should all be considered for each selected product. Improper selection, installation or use of products can cause property damage or personal injury.

Viton® - TM DuPont

H-1300, Rev.07, July 2011

CHECK VALVES

H-400 SERIES

H–400	General purpose fixed cracking pressure check valve (MAWP 3000 psig)
H–400 HP	High performance fixed cracking pressure check valve (MAWP 6000 psig)
H–400 OP	Compact one-piece fixed cracking pressure check valve (MAWP 3000 psigs)
H–400 OPA	One-piece adjustable cracking pressure check valve (MAWP 3000 psig)
H–400 A	Adjustable cracking pressure check valve (MAWP 3000 psig)

HAM-LET®
ADVANCED CONTROL TECHNOLOGY

FEATURES

- 316 St.St. and Brass construction
- Moderate Pressure Characteristics (up to 3000 psi)
- Compact Design
- Variable fixed cracking-pressure springs
- HAM-LET LET-LOK®, Male & Female NPT, and HTC® Face-Seal Bead Ends.

GENERAL

The H-400 Series is a compact design for instumentation panels and systems, which provides an accurate operating point. H-400 valves are normally closed. When differential pressure between inlet and outlet is higher than the set pressure of the spring, the loaded poppet will move backwards and will enable a free passage of flow through the valve.

MATERIALS OF CONSTRUCTION for sizes 1/8"-1/2"

Item No.		Components	Qty.	Valve Body Material
1		Body	1	St.St. 316
2		O-ring	1	Viton®
3		Poppet	1	St.St. 316
4	A	Spring 1/3 psi	1	St.St. 302
	B	Spring 3 psi	1	St.St. 302
	C	Spring 10 psi	1	St.St. 302
	D	Spring 25 psi	1	St.St. 302
5		End	1	St.St. 316

MATERIALS OF CONSTRUCTION for sizes 3/4"-1"

Item No.		Components	Qty.	Valve Body Material
1		Body	1	St.St. 316
2		O-ring	1	Viton®
3B		Poppet	1	St.St. 316
4	A	Spring 1/3 psi	1	St.St. 302
	B	Spring 3 psi	1	St.St. 302
	C	Spring 10 psi	1	St.St. 302
	D	Spring 25 psi	1	St.St. 302
5		End	1	St.St. 316
6		Upper O-ring	1	Viton®

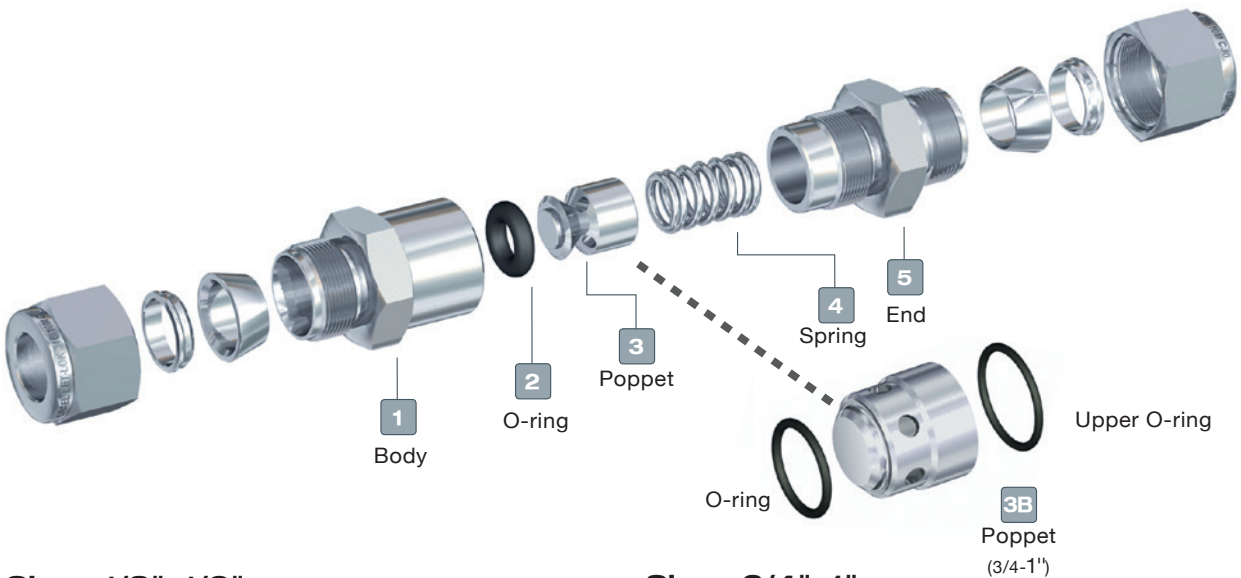

Sizes 1/8"–1/2"

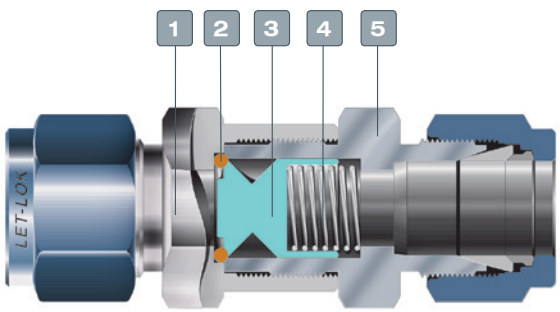

Sizes 3/4"–1"

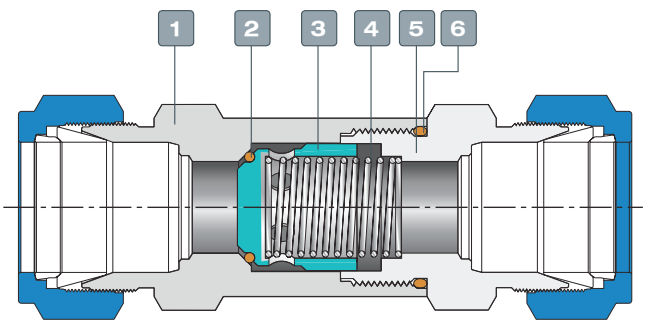

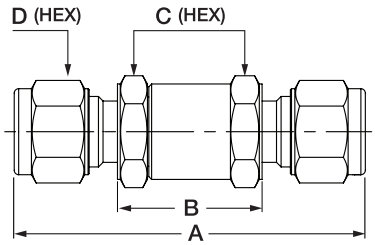

STANDARD CONFIGURATION DIMENSIONS												
Valve Type	Connection / Size		Cv	A		B		C		D		
	Inlet	Outlet		mm	in	mm	in	mm	in	mm	in	
H-400	1/8'' LET-LOK®	1/8'' LET-LOK®	0.1	56.0	2.20	25.3	1.00	15.88	5/8	11.11	7/16	
H-400	1/4'' LET-LOK®	1/4'' LET-LOK®	0.47	60.5	2.38	25.0	0.98	15.88	5/8	14.28	9/16	
H-400	6 MM LET-LOK®	6 MM LET-LOK®	0.47	60.5	2.38	25.0	0.98	15.88	5/8	14.00		
H-400	3/8'' LET-LOK®	3/8'' LET-LOK®	1.47	63.5	2.50	24.9	0.98	17.46	11/16	17.46	11/16	
H-400	8 MM LET-LOK®	8 MM LET-LOK®	1.47	63.3	2.49	24.9	0.98	17.5	11/16	16.00		
H-400	10 MM LET-LOK®	10MM LET-LOK®	1.68	64.0	2.52	24.9	0.98	17.46	11/16	19.00		
H-400	1/2'' LET-LOK®	1/2'' LET-LOK®	1.68	77.0	3.03	32.6	1.28	23.8	15/16	22.23	7/8	
H-400	12 MM LET-LOK®	12 MM LET-LOK®	1.68	77.0	3.03	32.8	1.28	23.8	15/16	22.00		
H-400	3/4'' LET-LOK®	3/4'' LET-LOK®	4.48	88.5	3.48	44.4	1.75	28.6	11/8	28.60	11/8	
H-400	1'' LET-LOK®	1'' LET-LOK®	4.48	120	4.72	67.2	2.65	34.9	13/8	38.10	11/2	
H-410	1/8'' Female NPT	1/8'' Female NPT	0.1	44.0	1.73	25.4	1.00	15.88	5/8			
H-410	1/4'' Female NPT	1/4'' Female NPT	0.47	52.5	2.07	28.0	1.10	19.05	3/4			
H-410	3/8'' Female NPT	3/8'' Female NPT	1.47	51.5	2.03	34.1	1.34	22.23	7/8			
H-410	1/2'' Female NPT	1/2'' Female NPT	1.68	76.5	3.01	43.4	1.71	28.6	11/8			
H-410	3/4'' Female NPT	3/4'' Female NPT	4.48	86.0	3.39	56.0	2.20	34.9	13/8			
H-410	1'' Female NPT	1'' Female NPT	4.48	107	4.21	73.0	2.87	41.28	15/8			
H-480	1/8'' Male NPT	1/8'' Male NPT	0.1	44.3	1.74	24.9	0.98	15.88	5/8			
H-480	1/4'' Male NPT	1/4'' Male NPT	0.47	53.3	2.10	25.0	0.98	19.05	3/4			
H-480	3/8'' Male NPT	3/8'' Male NPT	1.47	53.1	2.09	24.9	0.98	17.46	11/16			
H-480	1/2'' Male NPT	1/2'' Male NPT	1.68	70.4	2.77	32.6	1.28	23.8	15/16			
H-480	1/4'' Male Face Seal	1/4'' Male Face Seal	0.47	56.4	2.22	24.9	0.98	15.88	5/8			
H-480	1/2"Male Face Seal	1/2'' Male Face Seal	1.68	68.2	2.69	32.6	1.28	23.8	15/16			
H-485	1/8''Male NPT	1/8'' Female NPT	0.1	44.3	1.74	25.4	1.0	15.88	5/8			
H-485	1/4''Male NPT	1/4'' Female NPT	0.47	53.7	2.11	27.3	1.07	19.05	3/4			

CRACKING PRESSURE

The differential pressure between inlet and outlet, at which an initial flow is passing through the valve.

RESEAL PRESSURE

The differential pressure between outlet and inlet, at which no flow is passing through the valve.

BACK PRESSURE

Maximum allowable back pressure is rated to 1000 psi (69 bar) for 1/4, 200 psi (14 bar) for 3/8 to 1". For higher back pressure please select valve from H-400HP Series.

O-RINGS*

O-ring Material	Temperature Rating °F (°C)
Buna N	-10 to 250 (-23 to 121)
EPDM	-50 to 300 (-45 to 148)
Viton® (Fluorocarbon)	-10 to 375 (-23 to 190)
Perfluor	-15 to 500 (-26 to 260)
Neoprene	-40 to 250 (-40 to 121)

*Different materials are available for special applications.

MAWP PRESSURE AT 21°C (70°F)

SIZE	BRASS psi (bar)	AISI 316 psi (bar)
1/8 ,1/4, 3/8, 1/2, 5/8, 6mm, 8mm,10mm,12mm	3000 (207)	3000 (207)
3/4, 1", 16mm, 20mm, 22 mm	1500 (103)	2000 (138)

CRACKING AND RESEAL PRESSURE

Nominal Cracking Pressure	Cracking Pressure Range	Reseal Pressure	
psi (bar)	psi (bar)	psi (bar)	Upstream / Downstream Pressure
1/3 (0.02)	Up to 3 (0.2)	Up to 6 (0.40)	Downstream
1 (0.06)	Up to 4 (0.27)	Up to 6 (0.41)	Downstream
10 (0.68)	7 to 15 (0.48 to 1.0)	3 (0.2) or more	Upstream
25 (1.7)	20 to 30 (1.3 to 2.0)	17 (1.1) or more	Upstream

PRESSURE - TEMPERATURE RATING FOR STANDARD CONFIGURATIONS

1/8 TO 1/2 INCH, 3MM TO 12 MM

Material	316St.St.	Brass
Temperature F° (C°)	Working Pressure, psi (bar)	
-10 (-23) to 100 (37)	3000 (206)	3000 (206)
200 (93)	2575 (177)	2600 (179)
250 (121)	2450 (168)	2405 (165)
300 (148)	2325 (160)	-
375 (190)	2185 (150)	-

Note: Ratings based on Viton O-ring.

3/4 TO 1 INCH, 18MM TO 25MM

Material	316St.St.	Brass
Temperature F° (C°)	Working Pressure, psi (bar)	
-10 (-23) to 100 (37)	2000 (137)	1500 (103)
200 (93)	1715 (118)	1300 (89.5)
250 (121)	1630 (112)	1200 (82.6)
300 (148)	1545 (106)	-
375 (190)	1450 (99.9)	-

CLEANING & PACKAGING

HAM-LET H-400 valves are treated with HAM-LET Passivation, Cleaning and Packaging (Procedure 8075).
HAM-LET H-400 Valves with face seal end connections are treated with HAM-LET Oxygen Cleaning and Packaging (Procedure 8055). Oxygen cleaning and packaging for other end connections are available as an option.

TESTING

The H-400 valve designs have been tested for Proof and Burst. Every H-400 valve is factory tested for proper assembly, by leakage detection at 1000 psig (68 bar) for 10 seconds.
Every H-400 valve is factory tested for functionality at the relevant cracking pressure, 5 cycles each.

H-400 SERIES ORDERING INFORMATION

H-4 00 - SS - L - 1/4 - 1/3 - OPTIONAL

Valve Series

Material

SS	St.St. 316
B	Brass

End Connection Size

1/4	6 MM
3/8	8 MM
1/2	10 MM
3/4	12 MM
1	25 MM

O-ring Material

BU	Buna N
EP	EPDM
NE	Neoprene
KZ	Perfluor
PT*	PTFE

VI - Viton® is a standard
*PTFE seals are available up to 1/2" valves only and require relatively high back pressure to seal leaktight.

Valve Type

00	LET-LOK® End
10	Female End
15	Female to Male End
80	Male End
85	Male to Female End
90	Female to LET-LOK® End
95	Male to LET-LOK® End

End Connection

L	LET-LOK® Tube Fitting
N	Threaded NPT
G	Threaded BSPP
R	Threaded BSPT
GL	Face Seal Male Connector
HL	ONE-LOK® Tube Fitting

Other end connections are available upon request.

Cracking Pressure

1/3 PSI
1 PSI
3 PSI
5 PSI
10 PSI
25 PSI
50 PSI

Treatment

BLANK	Standard Cleaning & Passivation
OC	Oxygen Clean
LF	Lubricant Free

SPARE KITS

Series	End Size	Spring Kit*	O-Ring Kit**
H-410 Female Ends H-490 Female to Let-Lok	1/8	Z-400-SPK-1/4-**X** PSI	Z-400-SK-1/4-□
	1/4 , 3/8	Z-400-SPK-3/8-**X** PSI	Z-400-SK-3/8-□
	1/2	Z-410-SPK-1/2-**X** PSI	Z-410-SK-1/2-□
	3/4	Z-410-SPK-3/4-**X** PSI	Z-410-SK-3/4-□
	1	Z-410-SPK-1"-**X** PSI	Z-410-SK-1"- □
H-485 Male to Female H-415 Female to Male	1/8	Z-400-SPK-1/4-**X** PSI	Z-400-SK-1/4-□
	¼,3/8	Z-400-SPK-3/8-**X** PSI	Z-400-SK-3/8-□
	1/2	Z-410-SPK-1/2-**X** PSI	Z-410-SK-1/2-□
	3/4	Z-410-SPK-3/4-**X** PSI	Z-410-SK-3/4-□
H-400 Let-Lok H-480 Male Ends H-495 Male to Let-Lok	1/8, 1/4, 6mm	Z-400-SPK-1/4-**X** PSI	Z-400-SK-1/4-□
	3/8 ,8mm, 10mm	Z-400-SPK-3/8-**X** PSI	Z-400-SK-3/8-□
	1/2, 12mm	Z-400-SPK-1/2-**X** PSI	Z-400-SK-1/2-□
	3/4	Z-400-SPK-3/4-**X** PSI	Z-400-SK-3/4-□
	1	Z-410-SPK-3/4-**X** PSI	Z-410-SK-3/4-□

* Spring Kit includes Spring and lable
** O-ring Kit includes O-ring and lable

X =spring type per "How To Order"
□ =O-Ring material per "How To Order"

HAM-LET Check Valves should never be used as safety relief devices. These valves are not designed for pressure release.

FEATURES

- 316 St.St. construction
- High Pressure Characteristics (up to 6000 psi)
- Small Size
- Variable Fixed Cracking Pressure
- HAM-LET LET-LOK®, Male & Female NPT, and HTC Face Seal Bead Ends

GENERAL

The H-400HP Series is a compact, robust and heavy duty design for high-pressure (up to 6000 psi) instumentation panels and systems, which provides an accurate operating point. H-400HP valves are normally closed. When the differential pressure between the inlet and the outlet is higher than the set pressure of the spring, the loaded poppet will move backwards and provide a free passage of flow through the valve.

MATERIALS OF CONSTRUCTION

No.	Components	Qty.	Valve body material
1	Body	1	St.St. ASTM A-276
2	Poppet	1	Viton Bonded on 316 St.St.
3	Pusher	1	St.St. ASTM A-276
4	Spring	1	St.St. 304
5	O-ring	1	Viton®
6	Back Up	1	Viton®
7	End	1	St.St. ASTM A-276

PRESSURE TEMPERATURE RATING

Material Size	316SS	
	1/8, 1/4, 3/8, 1/2", 6,8,10,12mm	22&25mm , 3/4&1"
Temperature F° (C°)	Working Pressure, psi (bar)	
-10 (-23) to 100 (37)	6000 (413)	5000 (344)
200 (93)	5160 (355)	4290 (296)
250 (121)	4910 (338)	4080 (281)
300 (148)	4660 (321)	3875 (267)
400 (204)	4280 (295)	3560 (245)

Pressure estimates may be limited by the end connections (See Table of dimensions on the next page).

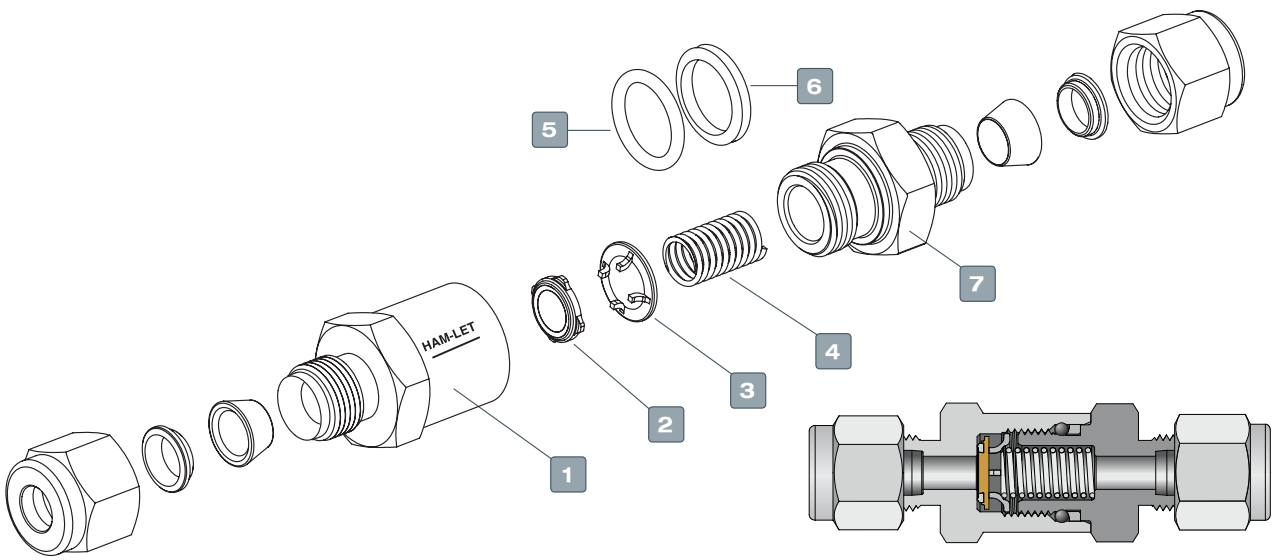

CRACKING AND RESEAL PRESSURE

Nominal Cracking Pressure	Cracking Pressure Range	Reseal Pressure	
psi (bar)	psi (bar)	psi (bar)	Upstream/Down-stream Pressure
1/3 (0.02)	Up to 3 (0.2)	Up to 6 (0.40)	Downstream
1 (0.06)	Up to 4 (0.27)	Up to 4 (0.27)	Downstream
5 (0.34)	3 to 9 (0.20 to 0.62)	Up tp 2 (0.13)	Downstream
10 (0.68)	7 to 15 (0.48 to 1.0)	3 (0.2) or more	Upstream
25 (1.7)	20 to 30 (1.3 to 2.0)	17 (1.1) or more	Upstream

TECHNICAL DATA

Connection Sizes	Max. Flow Coefficient (Cv)	Nominal Cracking Pressure psi (bar)	Downstream Pressure at 70°F (20°C) psi (bar)
1/8, 1/4, 6mm	0.67	1/3, 1, 5, 10 & 25	6000 (413)
3/8, 1/2, 8-12 mm	1.80	(0.02, 0.06, 0.34,	
3/4, 1, 22mm, 25mm	4.7	0.68, and 7.1)	5000 (344)

Cracking Pressure

The differential pressure between inlet and outlet, at which an initial flow is passing through the valve.

Reseal Pressure

The differential pressure between outlet and inlet, at which no flow is passing through the valve.

CLEANING & PACKAGING

HAM-LET H-400HP valves are treated with HAM-LET Passivation, Cleaning and Packaging (Procedure 8075).
HAM-LET H-400HP Valves with face-seal end connections are treated with HAM-LET Oxygen Cleaning and Packaging (Procedure 8055). Oxygen Cleaning and Packaging for other end connections are available as an option.

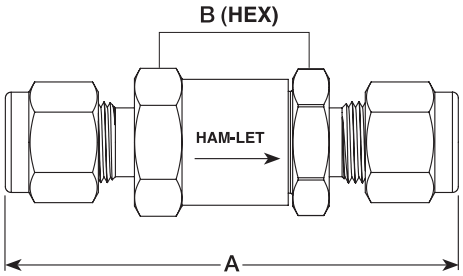

STANDARD CONFIGURATION DIMENSIONS

Valve Type	Inlet	Outlet	Pressure Ratings at 100F° / 37C° psig (bar)	Dimensions A mm	Dimensions A in	Dimensions B in
H-400HP	1/8" LET-LOK®	1/8" LET-LOK®	6000 (413)	57.8	2.28	11/16
	1/4" LET-LOK®	1/4" LET-LOK®		61.8	2.43	
	3/8" LET-LOK®	3/8" LET-LOK®		70.0	2.76	1
	1/2" LET-LOK®	1/2" LET-LOK®		75.3	2.96	
	3/4" LET-LOK®	3/4" LET-LOK®	5000 (344)	89.5	3.52	1 5/8
	1" LET-LOK®	1" LET-LOK®	4700 (323)	98.5	3.88	
	6MM LET-LOK®	6MM LET-LOK®	6000 (413)	61.8	2.43	11/16
	8MM LET-LOK®	8MM LET-LOK®		68.5	2.70	1
	10MM LET-LOK®	10MM LET-LOK®		71.1	2.80	
	12MM LET-LOK®	12MM LET-LOK®		75.3	2.96	
	22MM LET-LOK®	22MM LET-LOK®	5000 (344)	88.5	3.48	1 5/8
	25MM LET-LOK®	25MM LET-LOK®	4700 (323)	98.5	3.88	
H-410HP	1/4" Female NPT/BSPT	1/4" Female NPT/BSPT	6000 (413)	54.1	2.13	11/16
	3/8" Female NPT/BSPT	3/8" Female NPT/BSPT	5000 (344)	64.8	2.55	1
	1/2" Female NPT/BSPT	1/2" Female NPT/BSPT	4600 (316)	77.0	3.03	1
	3/4" Female NPT/BSPT	3/4" Female NPT/BSPT	4300 (296)	82.0	3.23	1 5/8
	1" Female NPT/BSPT	1" Female NPT/BSPT	4100 (282)	97.3	3.83	
	1/4" Female BSPP	1/4" Female BSPP	6000 (413)	58.0	2.28	11/16
	1/2" Female BSPP	1/2" Female BSPP	4600 (316)	83.5	3.29	1
	3/4" Female BSPP	3/4" Female BSPP	4300 (296)	90.1	3.55	1 5/8
	1" Female BSPP	1" Female BSPP	4100 (282)	97.4	3.83	
	1/2" Female SAE/MS	1/2" Female SAE/MS	4600 (316)	69.5	2.74	1
H-480HP	1/8" Male NPT/BSPT	1/8" Male NPT/BSPT	6000 (413)	45.6	1.80	11/16
	1/4" Male NPT/BSPT	1/4" Male NPT/BSPT	6000 (413)	55.0	2.17	
	3/8" Male NPT/BSPT	3/8" Male NPT/BSPT		60.0	2.36	1
	1/2" Male NPT/BSPT	1/2" Male NPT/BSPT	6000 (413)	69.2	2.72	
	3/4" Male NPT/BSPT	3/4" Male NPT/BSPT	5000 (344)	83.5	3.29	1 5/8
	1" Male NPT/BSPT	1" Male NPT/BSPT		93.3	3.67	
	1/4" Male BSPP	1/4" Male BSPP	6000 (413)	55.0	2.17	11/16
	1/2" Male BSPP	1/2" Male BSPP		69.2	2.72	1
	3/4" Male BSPP	3/4" Male BSPP	5000 (344)	85.2	3.35	1 5/8
	1" Male BSPP	1" Male BSPP		93.3	3.67	
	1/2" Male SAE/MS	1/2" Male SAE/MS	6000 (413)	63.0	2.48	1
	1/4" Male HO Fitting	1/4" Male HO Fitting		50.4	1.98	11/16
	1/2" Male HO Fitting	1/2" Male HO Fitting		59.8	2.35	1
	3/4" Male HO Fitting	3/4" Male HO Fitting	5000 (344)	73.6	2.90	1 5/8
	1" Male HO Fitting	1" Male HO Fitting		73.6	2.90	
	1/4" Male Face Seal	1/4" Male Face Seal	6000 (413)	58.0	2.28	11/16
	1/2" Male Face Seal	1/2" Male Face Seal	3500 (241)	69.2	2.72	1
	3/4" Male Face Seal	3/4" Male Face Seal	3000 (206)	96.1	3.78	1 5/8

Dimensions are for reference only and are subject to change.

HIGH PERFORMANCE FIXED CRACKING PRESSURE CHECK VALVE H-400HP SERIES

O-RINGS
Different materials are available for special applications.

O-ring Material	Temperature Rating °F (°C)
Buna N	-10 to 250 (-23 to 121)
EPDM	-50 to 300 (-45 to 148)
Viton® (Fluorocarbon)	-10 to 400 (-23 to 204)
Neoprene	-40 to 250 (-40 to 121)

TESTING

The H-400HP valve designs have been tested for Proof and Burst. Every H-400HP valve is factory tested for proper assembly, by leakage detection at 1000 psig (68 bar) for 10 seconds.
Every H-400HP valve is factory tested for functionality at the relevant cracking pressure, 5 cycles each.

H-400HP SERIES ORDERING INFORMATION

H-4 00HP - SS - L - 1/4 - 1/3 [ ] [ ]

OPTIONAL

Valve Series

Material

SS	- St.St.316

End Connection Size

1/8	6 MM
1/4	8 MM
3/8	10 MM
1/2	
3/4	22 MM
1	25 MM

Treatment

BLANK	- Standard Cleaning & Passivation
OC	- Oxygen Clean
LF	- Lubricant Free

Valve Type

00HP	- LET-LOK® End
10HP	- Female End
15HP	- Female to Male End
80HP	- Male End
85HP	- Male to Female End
90HP	- Female to LET-LOK® End
95HP	- Male to LET-LOK® End

End Connection Type

L	- LET-LOK® Tube Fitting
N	- Threaded NPT
R	- ISO Tapered
GL	- Metal Face Seal Male
HO	- O-ring Face Seal Male
HL	- ONE-LOK®
OB	- SAE/MS

Cracking Pressure

1/3 PSI
1 PSI
3 PSI
5 PSI
10 PSI
25 PSI

Seal Material

BLANK	- Viton® Seals are standard.
BU	- Buna N
EP	- EPDM
NE	- Neoprene

Note: Check valves are designed and suitable for direct flow control only. These valves are not meant for pressure release.

ORDERING INFORMATION SPARE-PARTS KIT / REPAIR KIT

SEAL KIT

The kit includes O-ring , Back-up & Bonded Poppet and Label.

Z - 400HP - SK - 1/4 - VI

Body Designator per End Connection		
1/4	For	1/8, 1/4, 6MM
1/2	For	3/8, 1/2, 10MM, 12MM
3/4	For	3/4, 1", 25MM

Seal Material	
VI	- Viton®
BU	- Buna N
NE	- Neoprene
EP	- EPDM

SPRING KIT

The kit includes Spring & Label.

Z - 400HP - SPK - 1/4 - 1/3

Body Designator per End Connection		
1/4	For	1/8, 1/4, 6MM
1/2	For	3/8, 1/2, 10MM, 12MM
3/4	For	3/4, 1", 25MM

Cracking Pressure
1/3 PSI
1 PSI
3 PSI
5 PSI
10 PSI
25 PSI

Warning! For your safety
The system designer and user have the sole responsibility for selecting products suitable for their special application requirements, ensuring their safe and trouble-free installation, operation, and maintenance. Application details, material compatibility and product ratings should all be considered for each selected product. Improper selection, installation or use of products can cause property damage or personal injury.

HAM-LET Check Valves should never be used as safety relief devices.

GENERAL

The H-400OP Series is a compact one-piece design for moderate pressure (up to 3000 psi) instrumentation panels and systems, which provides a fixed operating point. H-400OP valves are normally closed. When the differential pressure between the inlet and the outlet is higher than the set pressure of the spring, the loaded poppet will move backwards and provide a free passage for flow through the valve.

MATERIALS OF CONSTRUCTION

Item No.	Components	Qty.	Valve Body Material	
			316 St.St.	Brass
1	Lock Screw	1	St.St. 304	Brass ASTM B-16
2	O-ring Holder	1	St.St. ASTM A-276	
3	O-ring	1	Viton® (Fluorocarbon)	
4	Poppet	1	St.St. ASTM A-276	Brass ASTM B-16
5	Spring	1	St.St. 302	
6	Body	1	St.St. ASTM A-276	Brass ASTM B-16

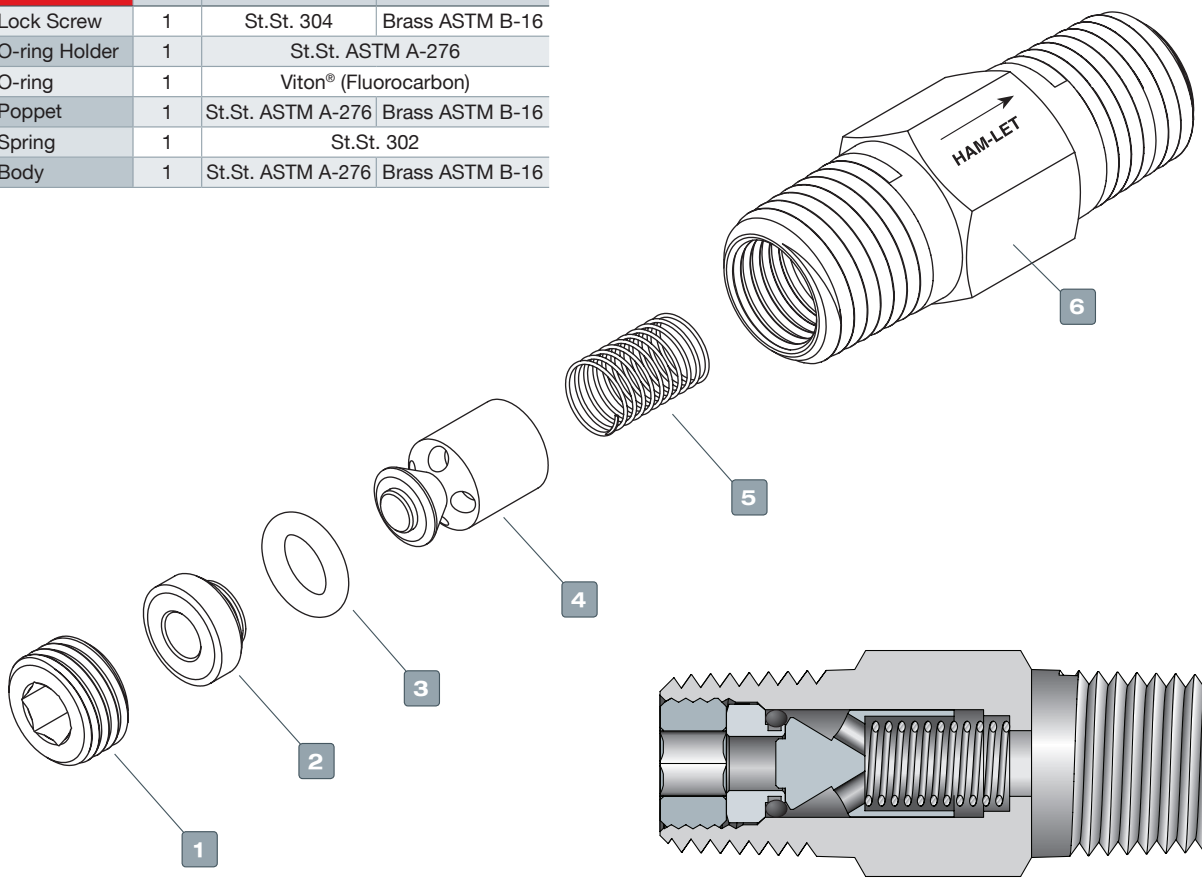

O-RINGS

Different materials are available for special applications.

O-ring Material	Temperature Rating °F (°C)
Buna N	-10 to 250 (-23 to 121)
Ethylene Propylene (EPDM)	-50 to 300 (-45 to 148)
Viton® (Fluorocarbon)	-10 to 375 (-23 to 190)
Perfluor	-15 to 500 (-26 to 260)
Neoprene	-40 to 250 (-40 to 121)

TECHNICAL DATA

Connection Sizes	Max. Flow Coefficient (Cv)	Nominal Cracking Pressure psi (bar)	Downstream Pressure at 70°F (20°C) psi (bar)
1/4	0.35	1/3, 1,10 & 25	3000 (207)
1/2	1.20	(0.02, 0.06, 0.68, and 7.1)	

CLEANING & PACKAGING

HAM-LET H-400OP valves are treated with HAM-LET Passivation, Cleaning and Packaging (Procedure 8075).
HAM-LET H-400OP valves with face-seal end connections are treated with HAM-LET Oxygen Cleaning and Packaging (Procedure 8055). Oxygen Cleaning and Packaging for other end connections are available as an option.

TESTING

The H-400OP valve designs have been tested for Proof and Burst. Every H400-OP valve is factory tested for proper assembly, by leakage detection at 100 psig (6.8bar) for 10 seconds.
Every H-400OP valve is factory tested for functionality at the relevant cracking pressure, 5 cycles each.

STANDARD CONFIGURATION DIMENSIONS

End Connection Inlet / Outlet	Size	Dimensions		
		A		B
		mm	in	in
Female NPT	1/4	61.0	2.4	3/4
	1/2	94.0	3.7	11/16
Male NPT	1/4	41.0	1.61	9/16
	1/2	58.0	2.28	7/8
Female / Male NPT	1/4	58.0	2.28	3/4
Male / Female NPT	1/4	44.5	1.75	3/4
	1/2	72.0	2.83	11/16
Female BSPT	1/4	61.0	2.54	3/4
Male BSPT	1/2	41.0	1.61	9/16

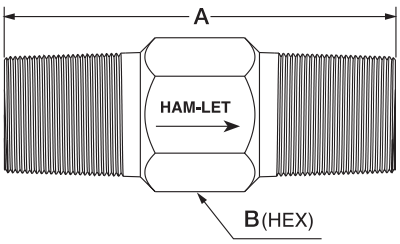

PRESSURE TEMPERATURE RATING

Material	316 St.St.	Brass
Temperature F° (C°)	Working Pressure, psi (bar)	
-10 (-23) to 100 (37)	3000 (206)	3000 (206)
200 (93)	2575 (177)	2600 (179)
250 (121)	2450 (168)	2405 (165)
300 (148)	2325 (160)	-
375 (190)	2185 (150)	-

CRACKING AND RESEAL PRESSURE

Nominal Cracking Pressure	Cracking Pressure Range	Reseal Pressure	
psi (bar)	psi (bar)	psi (bar)	Upstream / Downstream Pressure
1/3 (0.02)	Up to 3 (0.02)	6 to 20 (0.41 to 1.3)	Downstream
1 (0.06)	Up to 4 (0.27)	5 to 20 (0.34 to 1.3)	Downstream
10 (0.68)	7 to 13 (0.48 to 0.89)	3 to 10 (0.2 to 0.68)	Downstream
25 (1.7)	21 to 29 (1.4 to 1.9)	5 (0.34) or more	Upstream

CRACKING PRESSURE

The differential pressure between inlet and outlet, at which an initial flow is passing through the valve.

RESEAL PRESSURE

The differential pressure between outlet and inlet, at which no flow is passing through the valve.

H-400OP SERIES ORDERING INFORMATION

H-4 00OP - SS - N - 1/4 - 1/3 - [ ] - [ ]

OPTIONAL

Valve Series

Valve Type

10	- Female End
80	- Male End
85	- Male to Female

Material

SS	- St.St.316
B	- Brass

End Connection

N	- Threaded NPT
R	- Threaded BSPT

End Connection Size

1/4
1/2

Cracking Pressure

1/3 PSI
1 PSI
5 PSI
10 PSI
25 PSI

Treatment

BLANK	- Standard Cleaning & Passivation
OC	- Oxygen Clean
LF	- Lubricant Free

Seal Material

BLANK	- Viton® Seals are standard
BU	- Buna N
EP	- EPDM
NE	- Neoprene
KZ	- Perfluor

Note: Check valves are designed and suitable for direct flow control only. These valves are not meant for pressure release.

ORDERING INFORMATION SPARE KITS

SEAL KIT

The kit includes O-Ring and label

Z - 400OP - SK - 1/4 - VI

Body Designator per End Connection

1/4
1/2

Seal Material

VI	- Viton®
BU	- Buna N
EP	- EPDM
NE	- Neoprene
KZ	- Perfluor

SPRING KIT

The kit includes Spring & label

Z - 400OP - SPK - 1/4 - 1/3

Body Designator per End Connection

1/4
1/2

Cracking Pressure

1/3 PSI
1 PSI
5 PSI
10 PSI
25 PSI

Springs for other cracking pressures are available upon request.

Warning! For your safety
The system designer and user have the sole responsibility for selecting products suitable for their special application requirements, ensuring their safe and trouble-free installation, operation, and maintenance. Application details, material compatibility and product ratings should all be considered for each selected product. Improper selection, installation or use of products can cause property damage or personal injury.

*Dimensions are for reference only, and are subject to change

FEATURES

- One-piece Body
- 316 St.St. or Brass Construction
- Variable Adjustable Cracking Pressure Ranges
- Pressure Characteristics: up to 3000 psi
- HAM-LET Male & Female NPT, Male BSPT

GENERAL

The H-400OPA Series is a compact one-piece design for moderate-pressure up to 3000 psi (206 bar) instrumentation panels and systems, which provides an accurate and adjustable operating point. H-400OPA valves are normally closed. When the differential pressure between the inlet and the outlet is higher than the set pressure of the spring, the loaded poppet will move backwards and provide a free passage for flow through the valve.

MATERIALS OF CONSTRUCTION

Item No.	Components	Qty.	Valve Body Material	
			316 St.St.	Brass
1	Inlet Lock Screw	1	St.St. 304	Brass ASTM B-16
2	O-ring Holder	1	St.St. ASTM A-276	Brass ASTM B-16
3	O-ring	1	Viton® (Fluorocarbon)	
4	Poppet	1	St.St. ASTM A-276	Brass ASTM B-16
5	Body	1	St.St. ASTM A-276	Brass ASTM B-16
6	Spring	1	St.St. 302	
7	Adjusting Screw	1	St.St. 304	
8	Lock Screw	1	St.St. 304	

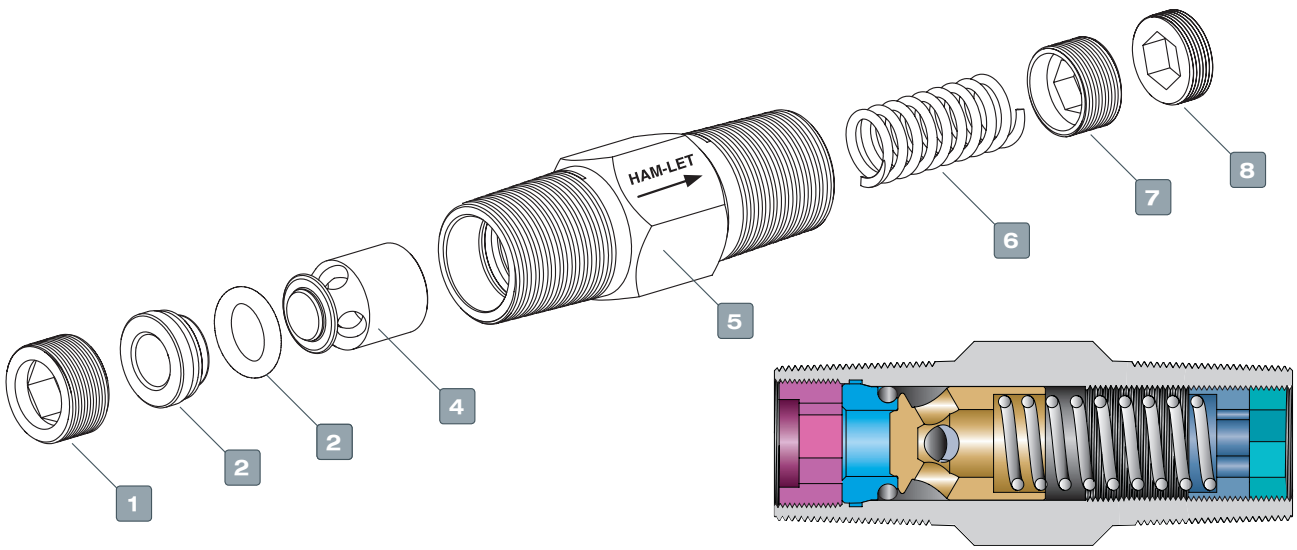

PRESSURE TEMPERATURE RATING

Material Size	316St.St.	Brass
Temperature F° (C°)	Working Pressure, psig (bar)	
-10 (-23) to 100 (37)	3000 (206)	3000 (206)
200 (93)	2575 (177)	2600 (179)
250 (121)	2450 (168)	2405 (165)
300 (148)	2325 (160)	-
375 (190)	2185 (150)	-

O–RINGS

Different materials are available for special applications.

O-ring Material	Temperature Rating °F (°C)
Buna N	-10 to 250 (-23 to 121)
EPDM	-50 to 300 (-45 to 148)
Viton® (Fluorocarbon)	-10 to 375 (-23 to 190)
Perfluor	-15 to 500 (-26 to 260)
Neoprene	-40 to 250 (-40 to 121)

CLEANING & PACKAGING

HAM-LET H-400OPA valves are treated with HAM-LET Passivation, Cleaning and Packaging (Procedure 8075).
HAM-LET H-400OPA valves with face-seal end connections are treated with HAM-LET Oxygen Cleaning and Packaging (Procedure 8055). Oxygen Cleaning and Packaging for other end connections are available as an option.

TESTING

The H-400OPA valve designs have been tested for Proof and Burst.
Every H-400OPA valve is factory tested for proper assembly, by leakage detection at 1000 psig (68 bar) for 10 seconds.
Every H-400OPA valve is factory tested for functionality at the relevant cracking pressure, 5 cycles each.

STANDARD CONFIGURATION DIMENSIONS

End Connection	Size Inlet / Outlet	Dimensions A mm	Dimensions A in	Dimensions B in
Female NPT	1/4	75.5	2.97	3/4
Male NPT	1/4	41	1.61	9/16
	1/2	65	2.55	7/8
Male BSPT	1/4	41	1.61	9/16
	1/2	65	2.55	7/8

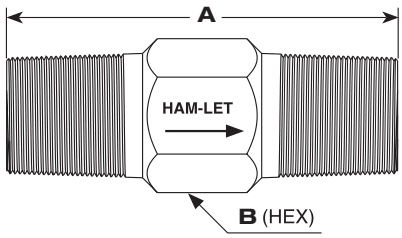

TECHNICAL DATA

End Connection Size	Max. FlowCoefficient (Cv)	Nominal Cracking Pressure psi (bar)	Downstream Pressure at 70°F (20°C) psi (bar)
1/4	0.35	3 to 50 (0.2 to 3.4)	3000 (207)
		50 to 150 (3.4 to 10.3)	
1/2	1.20	150 to 350 (10.3 to 24.1)	
		350 to 600 (24.1 to 41.3)	

CRACKING AND RESEAL PRESSURE

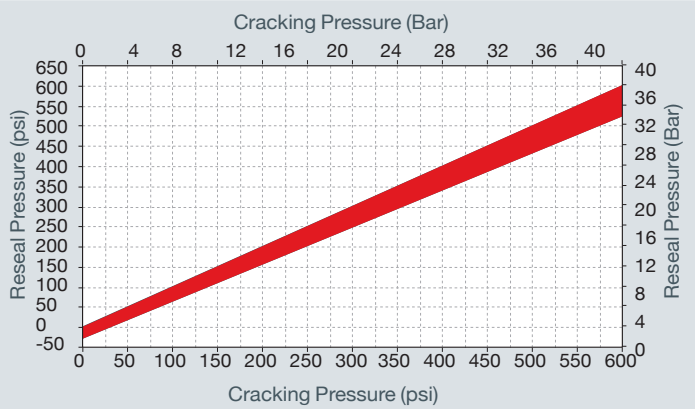

H-400OPA SERIES ORDERING INFORMATION

OPTIONAL

H-4 00OPA - SS - N - 1/4 - 3 - ☐ - ☐

Valve Series

Valve Type

10	- Female End
80	- Male End

Material

SS	- St.St. 316
B	- Brass

End Connection

N	- Threaded NPT
R	- Threaded BSPT

End Connection Size

1/4
1/2

Cracking Pressure

Designator	Values (psi)
3	3-50
50	50-150
150	150-350
350	350-600

O-ring Material

BLANK	- Viton® Seals are standard
BU	- Buna N
EP	- EPDM
NE	- Neoprene
KZ	- Perfluor

Treatment

BLANK	- Standard Cleaning & Passivation
OC	- Oxygen Clean
LF	- Lubricant Free

Note: Check valves are designed and suitable for direct flow control only. These valves are not meant for pressure release.

ORDERING INFORMATION SPARE KITS

SEAL KIT

The kit includes O-Ring & label

Z - 400OPA - SK - 1/4 - VI

Body Designator per End Connection

1/4
1/2

Seal Material

VI	- Viton®
BU	- Buna N
NE	- Neoprene
KZ	- Perfluor
EP	- EPDM

SPRING KIT

The kit includes Spring & label.

Z - 400OPA - SPK - 1/4 - 3

Body Designator per End Connection

1/4
1/2

Cracking Pressure

Designator	Values (psi)
3	3-50
50	50-150
150	150-350
350	350-600

Warning! For your safety
The system designer and user have the sole responsibility for selecting products suitable for their special application requirements, ensuring their safe and trouble-free installation, operation, and maintenance. Application details, material compatibility and product ratings should all be considered for each selected product. Improper selection, installation or use of products can cause property damage or personal injury.

FEATURES

- 316 St.St. or Brass Construction
- Variable Adjustable Cracking Pressure Ranges
- Pressure Characteristics: up to 3000 psi
- HAM-LET LET-LOK® Fittings, Male NPT, and HTC® Face Seal Bead

GENERAL

The H-400A Series is a compact design for moderate-pressure (up to 3000 psi) instrumentation panels and systems, which provides an accurate and adjustable operating point. H-400A valves are normally closed. When the differential pressure between the inlet and the outlet is higher than the set pressure of the spring, the loaded poppet will move backwards and provide a free passage for flow through the valve.

MATERIALS OF CONSTRUCTION

Item No.	Components	Qty.	Valve Body Material	
			316 St.St.	Brass
1	Gasket	1	316 St.St. Silver plated	Al-6061 Silver plated
2	O-ring Holder	1	St.St. ASTM A-276	Brass ASTM B-16
3	O-ring	1	Viton® (Fluorocarbon)	
4	Poppet	1	St.St. ASTM A-276	Brass ASTM B-16
5	Body	1	St.St. ASTM A-276	Brass ASTM B-16
6	Spring	1	St.St. 302	
7	Adjusting Screw	1	St.St. 304	
8	Lock Screw	1	St.St. 304	
9	Gasket	1	316 St.St. Silver plated	Al-6061 Silver plated
10	End	2	St.St. ASTM A-276	Brass ASTM B-16

PRESSURE - TEMPERATURE RATING FOR STANDARD CONFIGURATIONS

Material Size	316St.St.	Brass
Temperature F° (C°)	Working Pressure, psi (bar)	
-10 (-23) to 100 (37)	3000 (206)	3000 (206)
200 (93)	2575 (177)	2600 (179)
250 (121)	2450 (168)	2405 (165)
300 (148)	2325 (160)	-
375 (190)	2185 (150)	-

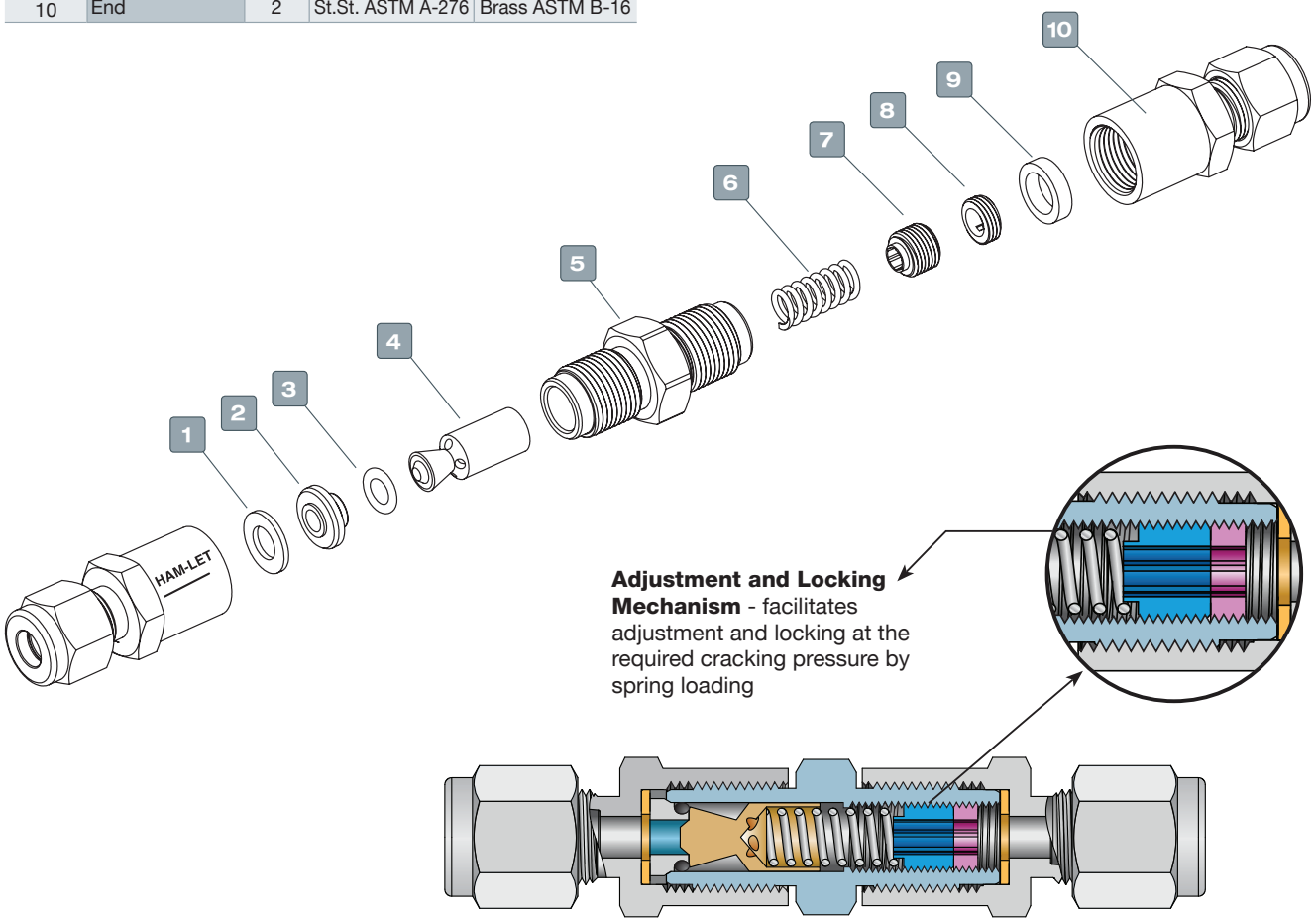

CLEANING & PACKAGING

HAM-LET H-400A valves are treated with HAM-LET Passivation, Cleaning and Packaging (Procedure 8075).
HAM-LET H-400A valves with face-seal end connections are treated with HAM-LET Oxygen Cleaning and Packaging (Procedure 8055). Oxygen cleaning and packaging for other end connections are available as an option.

DIMENSIONS

Intlet	Outlet	A		B	C
		mm	in	Hex	Hex
1/4 Let-Lok®	1/4 Let-Lok®	82.5	3.25	9/16	5/8
6MM Let-Lok®	6MM Let-Lok®	82.5	3.25	14MM	5/8
8MM Let-Lok®	8MM Let-Lok®	84.4	3.32	16MM	5/8
1/4 Male NPT	1/4 Let-Lok®	79.3	3.12	9/16	5/8
1/4 Male Face Seal	1/4 Male Face Seal	78.4	3.09	-	5/8
1/4 Male NPT	1/4 Male NPT	75.7	2.98	-	5/8

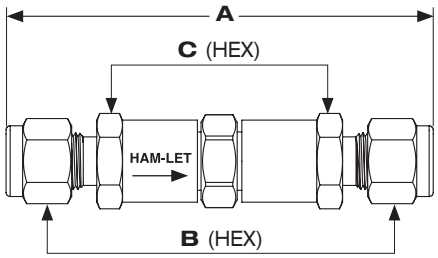

TECHNICAL DATA

Connection Size	Max. Flow Coefficient (Cv)	Nominal Cracking Pressure psi (bar)	Downstream Pressure at 70°F (20°C) psi (bar)
1/4, 6mm, 8mm	0.37	3 to 50 (0.2 to 3.4)	3000 (413)
		50 to 150 (3.4 to 10.3)	
		150 to 350 (10.3 to 24.1)	
		350 to 600 (24.1 to 41.3)	

O-RINGS

Different materials are available for special applications.

O-ring Material	Temperature Rating °F (°C)
Buna N	-10 to 250 (-23 to 121)
EPDM	-50 to 300 (-45 to 148)
Viton® (Fluorocarbon)	-10 to 375 (-23 to 190)
Perfluor	-15 to 500 (-26 to 260)
Neoprene	-40 to 250 (-40 to 121)

CRACKING AND RESEAL PRESSURE

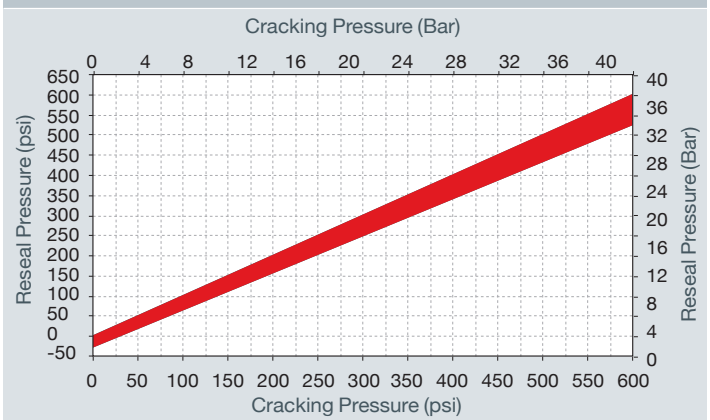

TESTING

The H-400A valve designs have been tested for Proof and Burst.
Every H-400A valve is factory tested for proper assembly by leak detection at 1000 psig (68 bar) for 10 seconds.
Every H-400A valve is factory tested for functionality at the relevant cracking pressure, 5 cycles each.

H-400A SERIES ORDERING INFORMATION

H-4 00A - SS - L - 1/4 - 1/3 [OPTIONAL]

Valve Series

Material

SS	- St.St.316
B	- Brass

End Connection Size

1/4
6 MM
8 MM

Treatment

BLANK	- Standard Cleaning & Passivation
OC	- Oxygen Clean
LF	- Lubricant Free

Valve Type

00A	- LET-LOK® End
80A	- Male End

For other valve types please consult HAM-LET.

End Connection

L	- LET-LOK® Tube Fitting
N	- Threaded NPT
GL	- Face Seal Male Connector
HL	- ONE-LOK®

Other end connections are available upon request.

Cracking Pressure

Designator	Values (psi)
3	3-50
50	50-150
150	150-350
350	350-600

Seal Material

BLANK	- Viton®
EP	- EPDM
NE	- Neoprene
KZ	- Perfluor
BU	- Buna N

Note: Check valves are designed and suitable for direct flow control only. These valves are not meant for pressure release.

ORDERING INFORMATION SPARE KITS

SEAL KIT

The kit includes O-ring & Label .

Z - 400A - SK - 1/4 - VI

Body Designator per End Connection

1/4	For all dimensions

Seal Material

VI	- Viton®
EP	- EPDM
NE	- Neoprene
KZ	- Perfluor
BU	- Buna N

SPRING KIT

The kit includes Spring & Label.

Z - 400A - SPK - 1/4 - 3

Body Designator per End Connection

1/4	For all dimensions

Cracking Pressure

Designator	Values (psi)
3	3-50
50	50-150
150	150-350
350	350-600

Warning! For your safety
The system designer and user have the sole responsibility for selecting products suitable for their special application requirements, ensuring their safe and trouble-free installation, operation, and maintenance. Application details, material compatibility and product ratings should all be considered for each selected product. Improper selection, installation or use of products can cause property damage or personal injury.

HAM-LET Check Valves should never be used as safety relief devices.

Viton® - TM DuPont

H-400, Rev.07, July 2011

INDUSTRIAL EXCESS FLOW VALVES

H-911 SERIES

HAM-LET®
ADVANCED CONTROL TECHNOLOGY

FEATURES

- Stainless Steel Construction
- MAWP 6000 psi (413 bar)
- MAWT 400°F (204°C)
- Variable connection sizes (1/8 to 1/2'' & 6 to 12mm)
- Cv = 0.5 ; 1.1
- Safety System Shutoff Device

GENERAL

1. The poppet is loaded by a spring in a normally open position as long as the system is balanced.
2. If the system becomes unbalanced and the downstream pressure drops, the poppet moves towards the sealing area and prevents free, uncontrolled excess flow from the line.
3. If the downstream pressure increases, the ventilation outlet ("bleeding") enables the system to balance the pressures and (with the help of the spring) to reset the system. In this situation, the poppet reverts back to Normally Open.

Excellent for Automatic Safety Shutoff in a wide range of areas:

- Fuel systems ■ Toxic Media Systems ■ Gas Systems ■ Valued Media Systems
- Hydraulic & Pneumatic Systems.

OPERATING PRINCIPLE

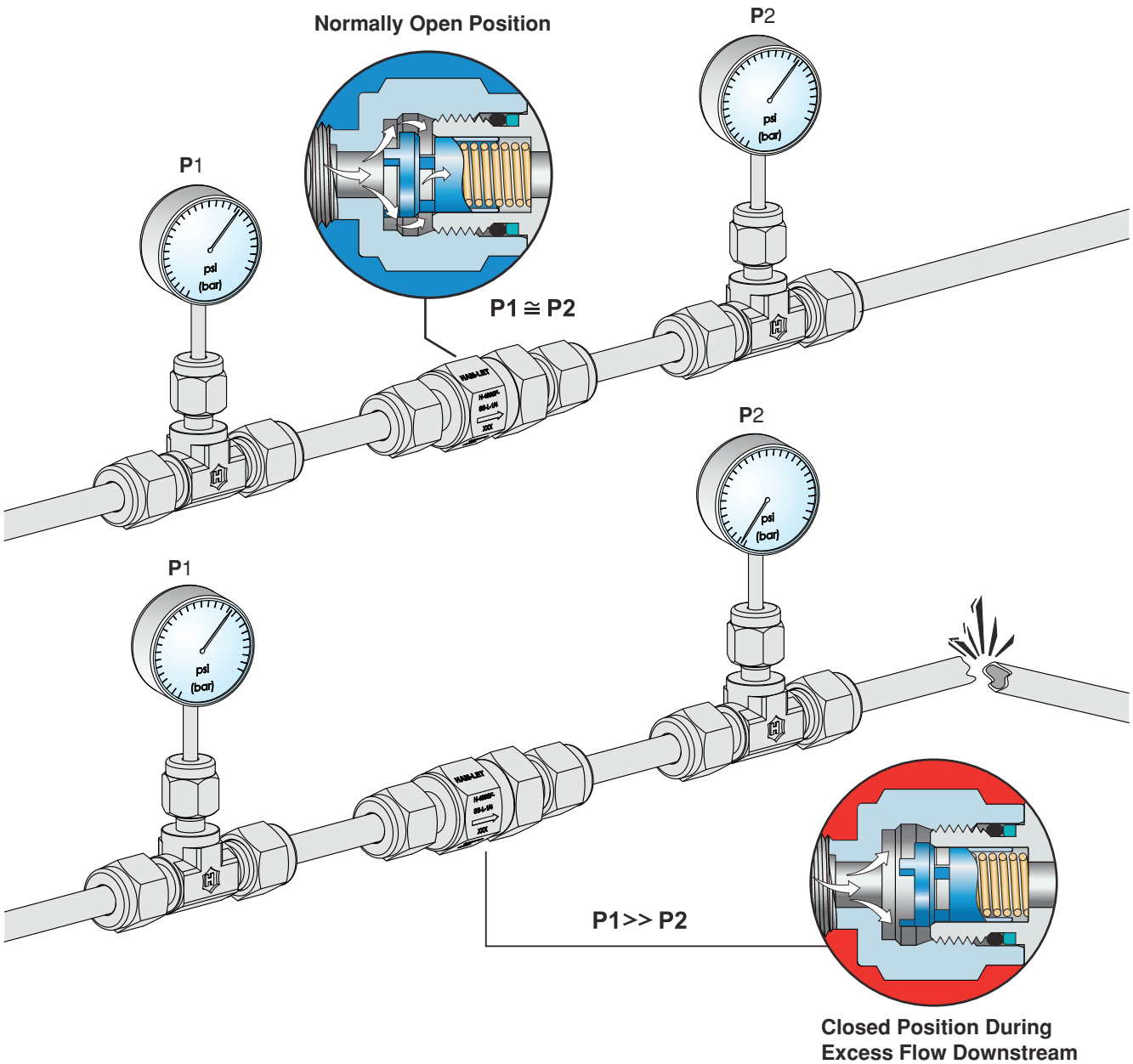

CLEANING & PACKAGING

HAM-LET H-911 Valves are treated for Passivation, Cleaning and Packaging (Procedure 8075). Oxygen Cleaning and Packaging (Procedure 8055) is available as an option.

TESTING

The design of the H-911 Valves has been tested for Proof and Burst. Every assembled valve is tested for proper functionality.

MATERIALS OF CONSTRUCTION

Item.	Components	Qty.	Valve Body Material
1	Insert	1	St.St.ASTM - 276
2	Back Up	1	Viton® (Flourocarbon)
3	O-ring	1	Viton® (Flourocarbon)
4	Body	1	St.St.ASTM - 276
5	Spring	1	St.St. 302
6	Poppet	1	St.St.ASTM - 276

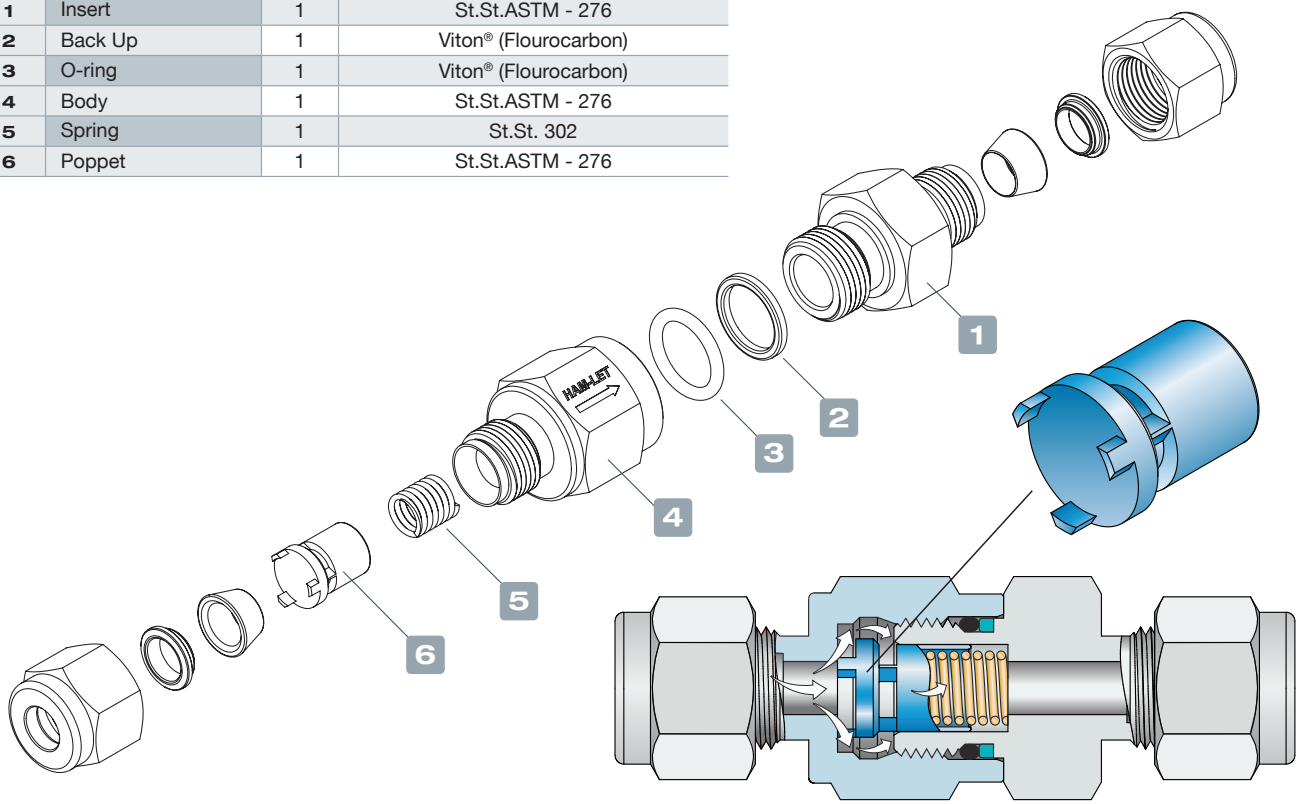

Open Postion

5 Spring

Resets the system back to normally open position when the downstream pressure equalizes the upstream pressure.

6 Poppet

- Produced from stainless steel.
- Enables high flow rates.
- Improves reliability and performance.

Vent "Bleeding"

Enables "information transfer" between the two sides of the valve, and automatically resets the system.

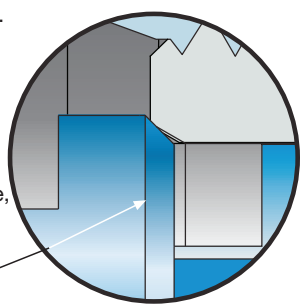

Metal Sealing

Improves stability and repeatability. Does not need maintenance.

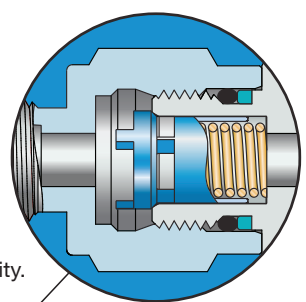

Closed Postion

PRESSURE TEMPERATURE RANGES

- The estimate refers to O-Rings and back up made from Viton®.
- For O-Rings made from other materials see ordering information.
- 5000 psi (344 bar) for the H-911 Series with end connections 3/8 NPT female.
- 4600 psi (316 bar) for the H-911 Series with end connection 1/2 NPT female.

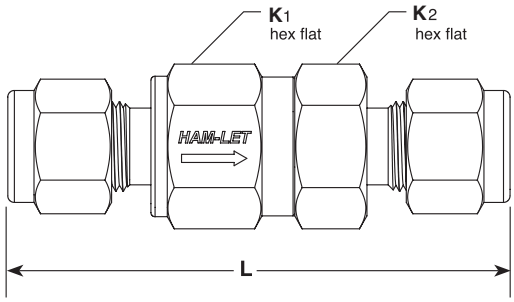

PRESSURE TEMPERATURE RANGES FOR 316 St.St

Temperature F° (C°)	Working Pressure, psi (bar)
-10 (-23) to 100 (37)	6000 (413)
200 (93)	5160 (355)
250 (121)	4910 (338)
300 (148)	4660 (321)
400 (204)	4280 (294)

PRESSURE TEMPERATURE RANGES

O-ring Material	Temperature Rating F° (C°)
Viton®	-15° to 400 (-26 to 204)
Buna-N	-40° to 250 (-40 to 121)
Ethylene propylene	-50° to 300 (-45 to 148)
Perfloor	-10° to 400 (-23 to 204)
Neoprene	-40° to 250 (-40 to 121)

Viton® O-Rings are standard.
For other O-Ring materials, see ordering information.
For O-Ring materials that are not in this table, please consult HAM-LET.

STANDARD CONFIGURATION DIMENSIONS

End Connection		Dimensions: inch (mm)		
Type	Size	L	K1	K2
LET-LOK® Tube Fittings	1/4''	2.43 (61.7)	11/16	11/16
	3/8''	2.75 (69.9)	1	1
	1/2''	2.97 (75.4)		
	6 mm	2.43 (61.7)	11/16	11/16
	8 mm	2.70 (68.6)	1	1
	10 mm	2.80 (71.1)	1	1
	12 mm	2.96 (75.2)		
Female NPT	1/8''	1.87 (47.5)	11/16	11/16
	1/4''	2.12 (53.8)	11/16	11/16
	3/8''	2.55 (64.8)	1	1
	1/2''	3.03 (77.0)	1	1
Male NPT	1/8''	1.79 (45.5)	11/16	11/16
	1/4''	2.17 (55.1)		
	3/8''	2.36 (59.9)	1	1
	1/2''	2.73 (69.3)		
Male NPT to LET-LOK® Tube Fittings	1/4''	2.30 (58.4)	11/16	11/16
	3/8''	2.56 (65.0)	1	1
	1/2''	2.85 (72.4)		
Male to Female NPT	1/4''	2.13 (54.1)	11/16	11/16
	3/8''	2.46 (62.5)	1	1
	1/2''	2.89 (73.4)	1	1
Male Face Seal	1/4''	2.28 (57.9)	11/16	11/16
	1/2''	2.73 (69.3)	1	1

Dimensions are for reference only, and are subject to change.

FLOW DATA AT 70°F (20°C)

For springs with other trip ranges, consult a HAM-LET representative.

AIR FLOW - CONNECTION SIZES : 1/4" , 6MM

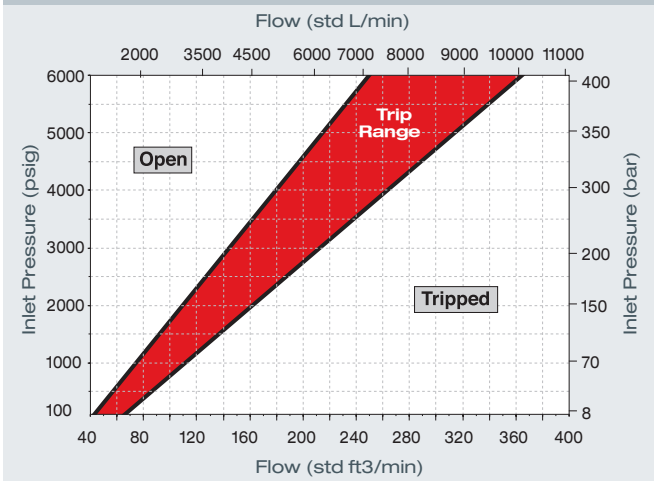

AIR FLOW - CONNECTION SIZES : 3/8" , 10MM

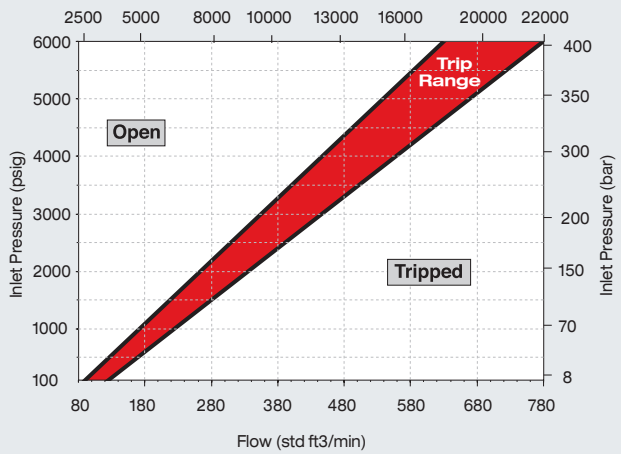

AIR FLOW - CONNECTION SIZES : 1/2" , 12MM

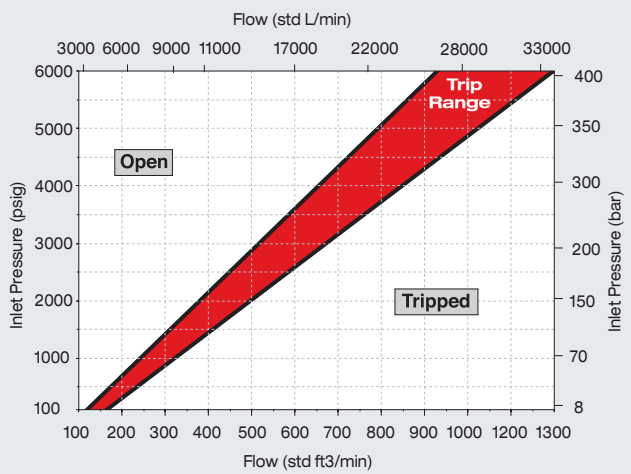

WATER FLOW

Connection Size	CV	Trip Range U.S. gal/min (L/min)
1/8, 1/4, 6mm	0.5	3.9 to 5.8 (14.7 to 21.9)
3/8, 8mm, 10mm	1.1	8.2 to 10.0 (31.0 to 37.9)
1/2, 12mm		11.2 to 14.9 (42.4 to 56.4)

H-911 SERIES ORDERING INFORMATION

H-911 - 00 - SS - L - 1/4 - [ ] - [ ]

OPTIONAL

Valve Series

Material

SS	- St.St.316

Treatment

BLANK	- Standard Cleaning & Passivation
OC	- Oxygen Clean
LF	- Lubricant Free

Valve Type

00	- LET-LOK® End
10	- Female End
80	- Male End
85	- Male to Female End
95	- Male to LET-LOK® End

End Connection Type

L	- LET-LOK® Tube Fitting
N	- Threaded NPT
R	- ISO Tapered
GL	- Face Seal Male Connector
HL	- ONE-LOK® Tube Fitting
HO	- O-ring Face Seal Male
OB	- SAE/MS

Other end connections are available upon request.

End Connection Size

*1/8	6 MM
1/4	8 MM
3/8	10 MM
1/2	12 MM

*1/8 is available for Female and Male Thearded ends only

O-Ring Material

BU	- Buna N
EP	- EPDM
NE	- Neoprene
KZ	- Perfluor

Viton® Seals are standard.

Warning! For your safety
The system designer and user have the sole responsibility for selecting products suitable for their special application requirements, ensuring their safe and trouble-free installation, operation, and maintenance. Application details, material compatibility and product ratings should all be considered for each selected product. Improper selection, installation or use of products can cause property damage or personal injury.

Viton® - TM DuPont
H-911, Rev.07, July 2011

RELIEF VALVES

H-900 SERIES

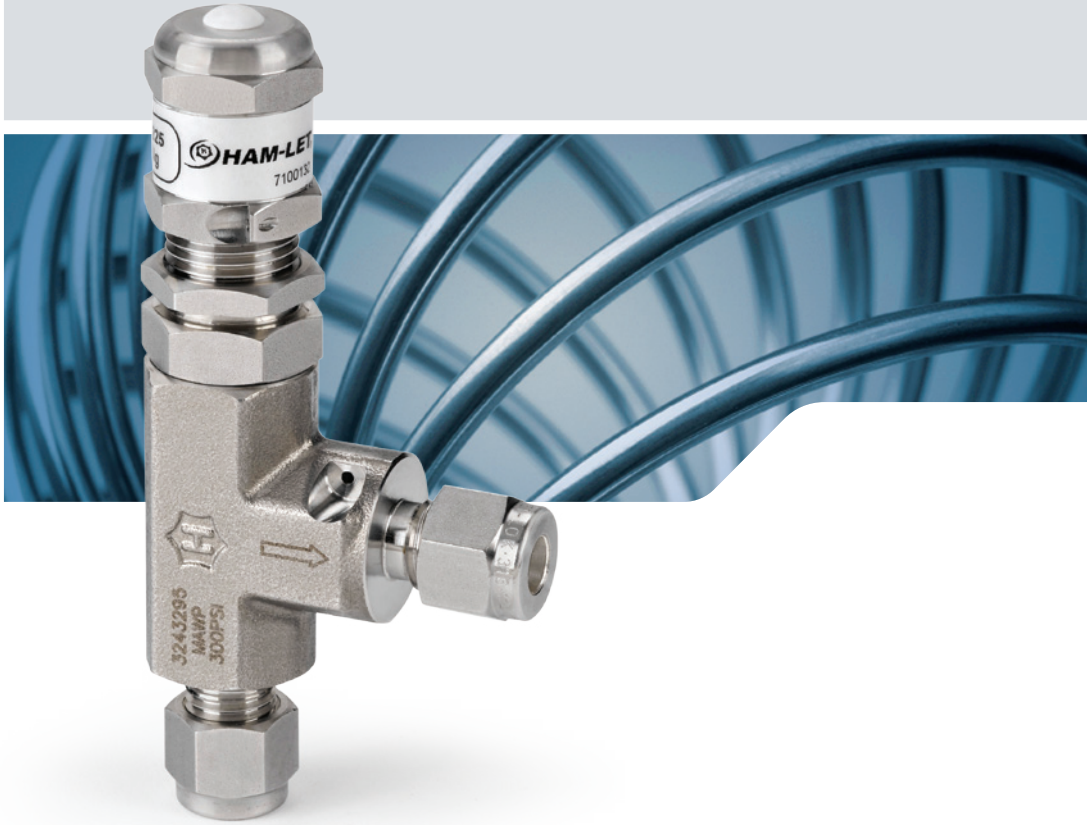

HAM-LET®
ADVANCED CONTROL TECHNOLOGY

FEATURES

- H-900 is available as CE/PED products.
- 316St.St. Construction
- Service 10-225 psi
- One spring for all set pressure range
- Available in all pipe threads and LET-LOK® connectors
- Sizes: 1/4" or 6mm

GENERAL

The H-900 series is a relief valve for low pressure service. The valve is normally closed. It will open when system pressure reaches the set level. It will re-close when the system pressure falls below the set level.

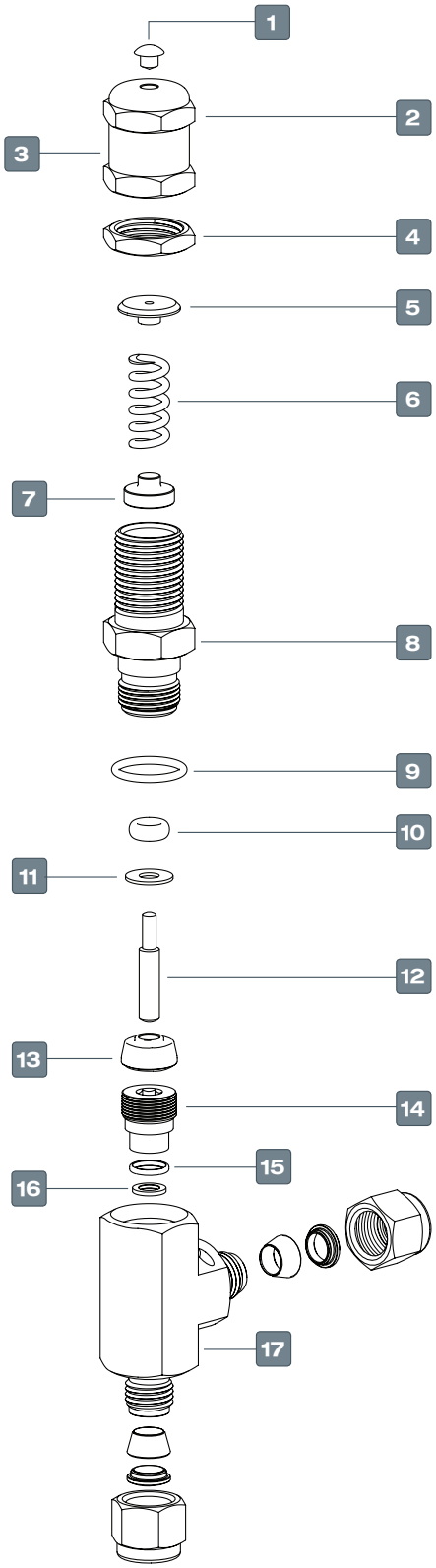

MATERIALS OF CONSTRUCTION

Item No.	Components	Qty.	Valve Body Material
1	Cap Plug	1	Polypropylene
2	Adjustment Cap	1	St.St. 316
3	Cap Lable	1	Polyester
4	Locking Nut	1	St.St. 316
5	Upper Spring Button	1	St.St. 316
6	Spring	1	St.St. 302
7	Lower Spring Button	1	St.St. 316
8	Bonnet	1	St.St. 316
9	O-ring	1	Viton® (Fluorocarbon)
10	O-ring	1	Viton® (Fluorocarbon)
11	Retaining Ring	1	PH15 - 7 Mo
12	Stem	1	St.St. 316
13	Poppet	1	St.St. 316 Bonded with Viton®
14	Insert	1	St.St. 316
15	Packing	1	PTFE
16	Ring	1	St.St. 316
17	Body	1	St.St. 316

STANDARD CONFIGURATION DIMENSIONS

Description	Connection / size		Oriffice		Dimensions							
	Inlet	Outlet			A		B		C		D	
			mm	inch	mm	inch	mm	inch	mm	inch	mm	inch
H-900	1/4 LET-LOK®	1/4 LET-LOK®	4.8	0.19	37	1.45	39	1.53	50	1.97	96	3.78
H-900	6MM LET-LOK®	6MM LET-LOK®			37	1.45	39	1.53	50	1.97	96	3.78
H-985	1/4 Male NPT	1/4 Female NPT			32	1.26	30	1.18	40	1.57	88.6	3.49
H-995	1/4 Male NPT	1/4 LET-LOK®			32	1.26	39	1.53	50	1.97	88.6	3.49

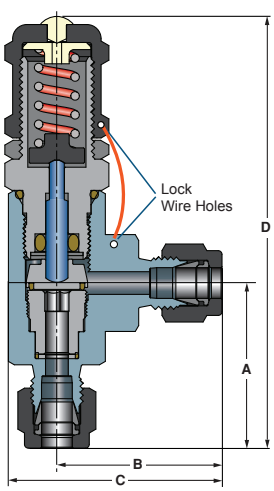

CLEANING AND PACKAGING

HAM-LET H-900 Relief Valve is treated with Passivation Cleaning and Packaging (Procedure 8075).
Oxygen Cleaning and Packaging (Procedure 8055) is available as an option.

TESTING

The HAM-LET H-900 Relief Valve designs have been tested for Proof and Burst.
Every H-900 Relief Valve is factory tested for proper set and resealing preformance.

SETTING AND RESEALING PRESSURE

- Upstream set pressure is the first indicator of flow process. Every pressure relief after the first indication is repeatable within a deviation of 5% at room temperature.
- Blocked upstream set pressure is the first indicator of a stopped flow process and is always lower than the set pressure.
- Calculation of set pressure valve design demands back pressure consideration as the system back pressure increases the set pressure.
  To balance the system the back pressure must be multiplied by 0.8 and the result shall be subtracted from the required set pressure.

PRESSURE TEMPERATURE RATING

Series	H-900 Size: 1/4"			
Seal Meterial	Viton®	Buna N	Neoprene	EPDM
TEMP °C (°F)	MAX SET PRESSURE psig (bar)			
-40 (-40)	-	-	-	225 (15.5)
-34 (-30)	-	-	225 (15.5)	
-23 (-10)	-	225 (15.5)		
-18 (0)	225 (15.5)			
-12 (10)				
-4 (25)				
-1 (30)				
10 (50)				
65 (150)				
93 (200)				
121 (250)				
135 (275)				
148 (300)	-			

H900 RESEAL PRESSURE

Series	Test Set Pressure psig (bar)	Min Resealing Pressure as a Percentage of set pressure, %
H-900	10 - 20 (0.68 to 1.3)	50
	175 - 225 (12.0 to 15.5)	90

FLOW DATA AT 70°F (20°C)

Orifice in fully open mode is 4.8mm (0.19 inch)

SPRING 10–225psig

WATER FLOW

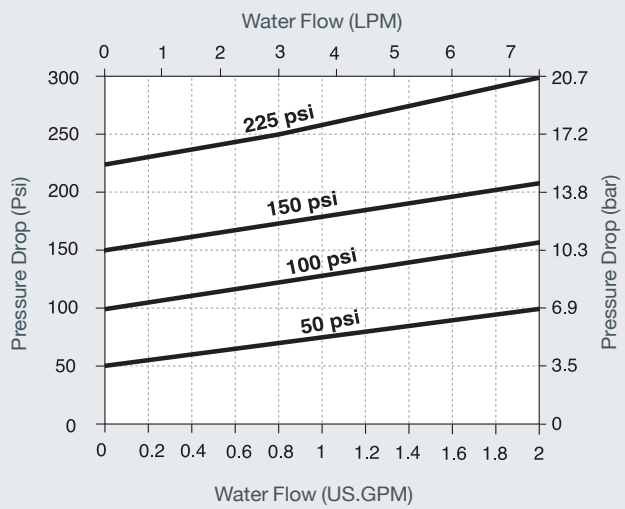

AIR FLOW

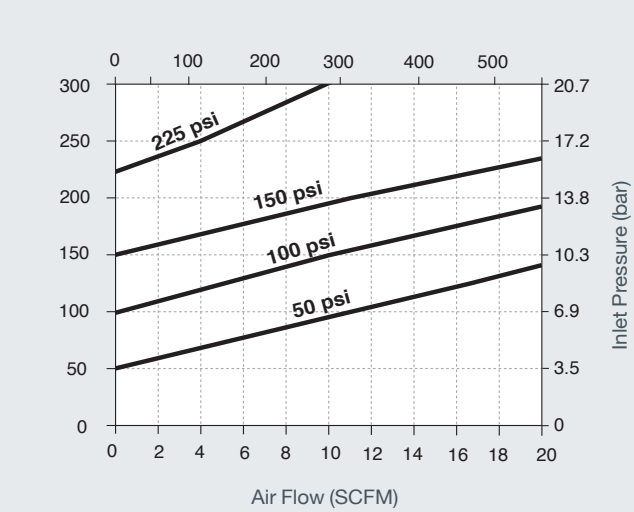

APPLICATIONS

H-900 relief valves gradually open when pressure increases.
As such, they are not certified to ASME due to not having capacity rating at a given pressure rise (accumulation).

OPERATION

H-900 relief valves open when system pressure gets to the set pressure and close when system pressure drops below the set pressure.

Warnings

- Valves that were not actuated for some time may contain pressure higher than the set pressure.
- System designer and users shall determine what system applications require using relief valves to meet specific safety codes and which valves conform to such codes.

H-900 SERIES ORDERING INFORMATION

H-9 00 - SS - L - 1/4 - SL - [ ] - [ ] - [ ]

OPTIONAL

Valve Series

Valve Type

00	- LET-LOK® Ends
85	- Male to Female End
95	- Male to LET-LOK® End

Body Material

SS	- 316St.St.

End Connection

L	- LET-LOK®
N	- NPT
R	- ISO Tapered
NL	- NPT to LET-LOK®

For other end connections, please contact HAM-LET representative.

End Connection Size

1/4	6MM

Spring Designator

SL	- Silver Code For Spring Range 10 - 225 psi

Seal Material

BU	- Buna N
EP	- EPDM
NE	- Neoprene

Viton® Seals are standard.

CE/PED Certification

BLANK	- Standard testing
CE	- Certification

Treatment

BLANK	- Standard Cleaning & Passivation
OC	- Oxygen Clean
LF	- Lubricant Free

ORDERING INFORMATION FOR SPARE KITS

SPRING KIT

Includes: Spring, Label, Wire and Lock

Z - 900 - SPK - 1/4

Body Designator per End Connection

1/4 for all end connections

SEAL KIT

Includes: O-rings, Bonded Poppet and Label

Z - 900 - SK - 1/4 - VI

Body Designator per End Connection

1/4 for all end connections

Seal Material

VI	- Viton®
BU	- Buna N
EP	- EPDM
NE	- Neoprene

Warning! For your safety

The system designer and user have the sole responsibility for selecting products suitable for their special application requirements, ensuring their safe and trouble-free installation, operation, and maintenance. Application details, material compatibility and product ratings should all be considered for each selected product. Improper selection, installation or use of products can cause property damage or personal injury.

Viton® - TM DuPont

H-900, Rev.08, July 2011

HIGH–PRESSURE RELIEF VALVES

H-900HP SERIES

HAM-LET®
ADVANCED CONTROL TECHNOLOGY

FEATURES

- H-900HP is available as CE/PED products.
- 316St.St. Construction
- Service up to 6000 psi
- Set Pressure from 50 psig to 6000 psig (3.50 to 414 bar)
- Identifying colored springs for each pressure range
- Replaceable springs for a variable pressure range
- Available in all pipe threads and LET-LOK® connectors
- Sizes: 1/4" or 6mm

GENERAL

H-900 HP is a series of relief valves for high-pressure service.
The valve is normally closed.
It will open when the system pressure reaches the set level.
It will re-close when the system pressure falls below the set level.

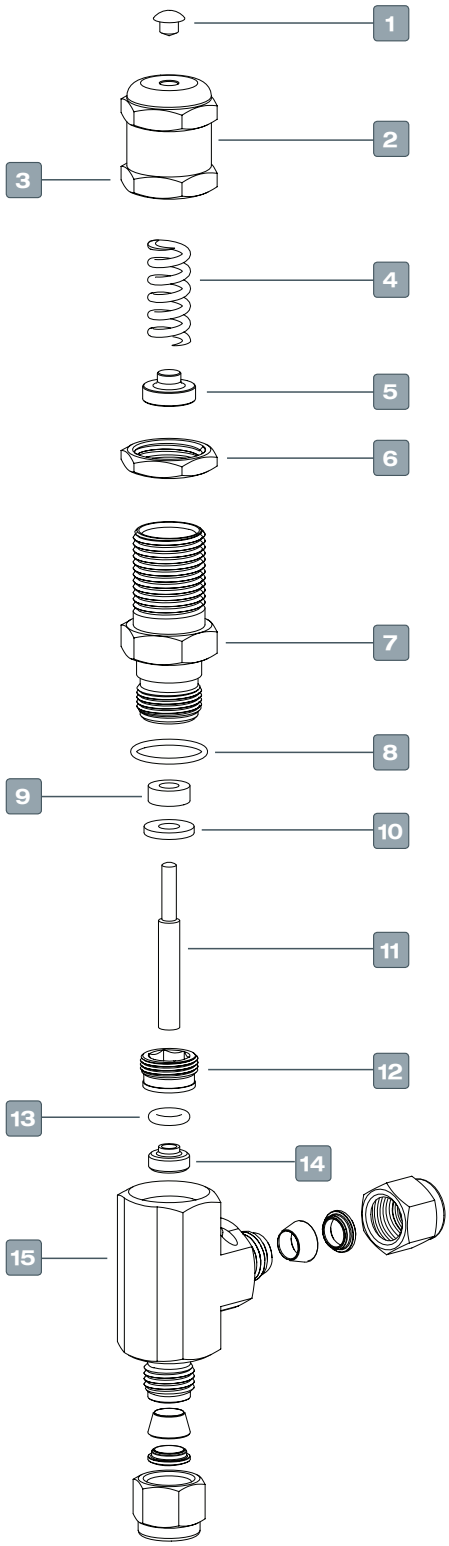

MATERIALS OF CONSTRUCTION

Item No.	Components	Qty.	Valve Body Material
1	Cap Plug	1	PTFE
2	Label	1	Polyester
3	Adjustment Cap	1	St.St 316
4	Spring	1	St.St. 302,17-7PH
5	Lower Spring Button	1	St.St 316
6	Locking Nut	1	St.St 316
7	Bonnet	1	St.St 316
8	O-Ring	1	Viton® (Fluorocarbon)
9	Quad Ring	1	Viton® (Fluorocarbon)
10	Retaining Ring	1	PH15-7Mo
11	Poppet	1	St.St 316
12	Clamps Screw	1	St.St 316
13	O-Ring	1	Viton® (Fluorocarbon)
14	Insert	1	St.St 316
15	Body	1	St.St 316

STANDARD CONFIGURATION DIMENSIONS

Description	Connection / size		Dimensions							
	inlet	outlet	A		B		C		D	
			mm	inch	mm	inch	mm	inch	mm	inch
H-900HP	1/4 LET-LOK®	1/4 LET-LOK®	37	1.45	39	1.53	50	1.97	96.0	3.78
H-900HP	6MM LET-LOK®	6MM LET-LOK®	37	1.45	39	1.53	50	1.97	96.0	3.78
H-985HP	1/4 Male NPT	1/4 Female NPT	32	1.26	30	1.18	40	1.57	88.6	3.49
H-995HP	1/4 Male NPT	1/4 LET-LOK®	32	1.26	39	1.53	50	1.97	88.6	3.49

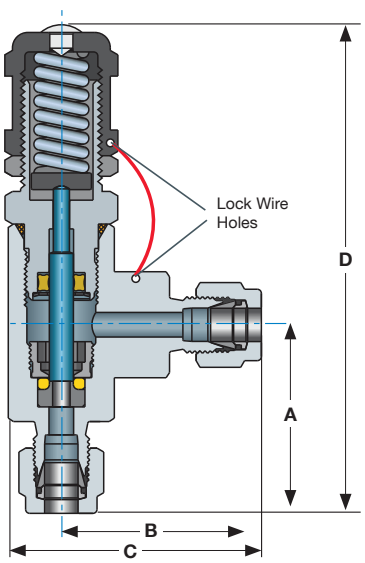

CLEANING AND PACKAGING

HAM-LET H-900HP Relief Valves are treated with Ham-Let Passivation Cleaning and Packaging (Procedure 8075). Oxygen Cleaning and Packaging (Procedure 8055) is available as an option.

TESTING

The HAM-LET H-900HP Relief Valves design has been tested for Proof and Burst.
Every H-900HP Relief Valve is factory tested for proper set and resealing performance.

NOMINAL CRACKING PRESSURE RANGE			
psig	Bar	Spring Designator	Color
50-350	3.4 - 24	A	White
350-750	24 - 51.5	B	Blue
750-1500	51.5 - 103	C	Gold
1500-2250	103 - 155	D	Turquoise
2250-3000	155 - 206	E	Green
3000-4000	206 - 275	F	Red
4000-5000	275 - 344	G	Silver
5000-6000	344 - 413	H	Black

PRESSURE TEMPERATURE RATING				
Series	H-900HP Size: 1/4"			
Seal Meterial	Viton®	Buna N	Neoprene	EPDM
TEMP °C (°F)	MAX SET PRESSURE psig (bar)			
-40 (-40)	-	-	-	-
-34 (-30)				
-23 (-10)			6000 (413)	
-18 (0)		6000 (413)		
-12 (10)				
-4 (25)	6000 (413)			6000 (413)
-1 (30)				
10 (50)				
65 (150)	5600 (386)	5600 (386)	5600 (386)	5600 (386)
93 (200)	5200 (358)	5200 (358)	5200 (358)	5200 (358)
121 (250)	4900 (338)	4900 (338)	4900 (338)	4900 (338)
135 (275)	-	-	4700 (324)	-
148 (300)				

SETTING AND RESEALING PRESSURE

- Upstream set pressure is the first indicator of flow process. Every pressure relief after the first is repeatable within a deviation of 5% at room temperature.
- Blocked upstream set pressure is the first indicator of a stopped flow process and is always lower than the set pressure.

H-900HP RESEAL PRESSURE		
Series	Test Set Pressure psig (bar)	Min Resealing Pressure as a Percentage of set pressure, %
H-900HP	100 - 200 (6.8 to 13.7)	50
	850 - 1000 (58.5 to 68.9)	84

FLOW DATA AT 70°F (20°C)

Orifice in fully open mode is 3.6mm (0.14 inch)

SPRING 50–350psig

SPRING 350–750psig

AIR FLOW

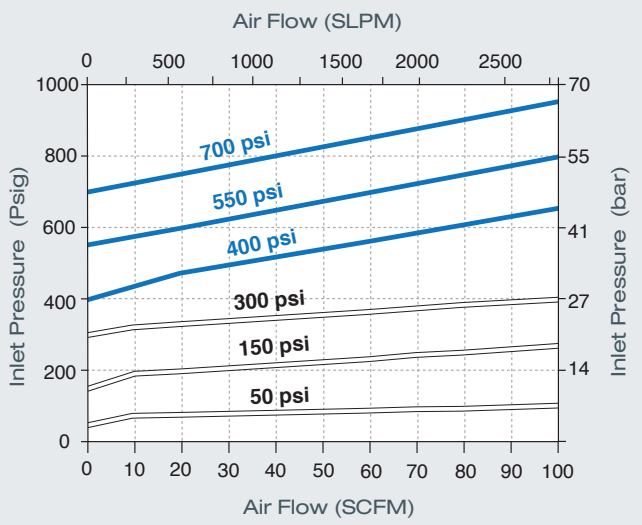

WATER FLOW

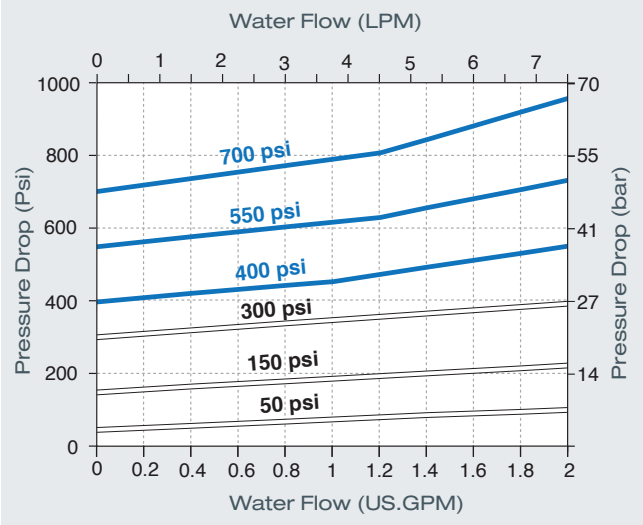

SPRING 750–1500psig

SPRING 1500–2250psig

AIR FLOW

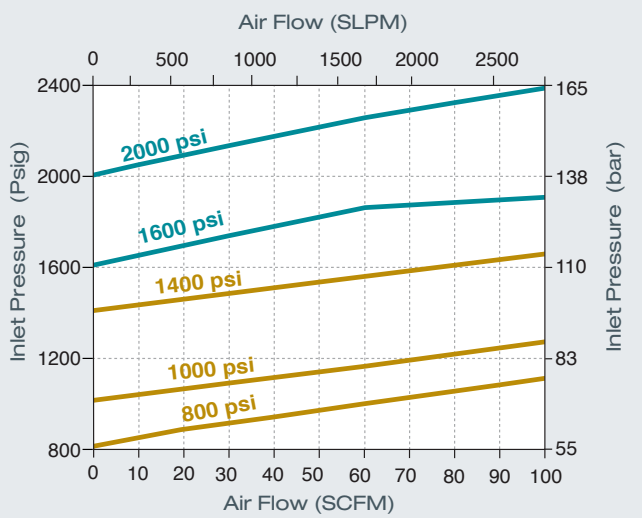

WATER FLOW

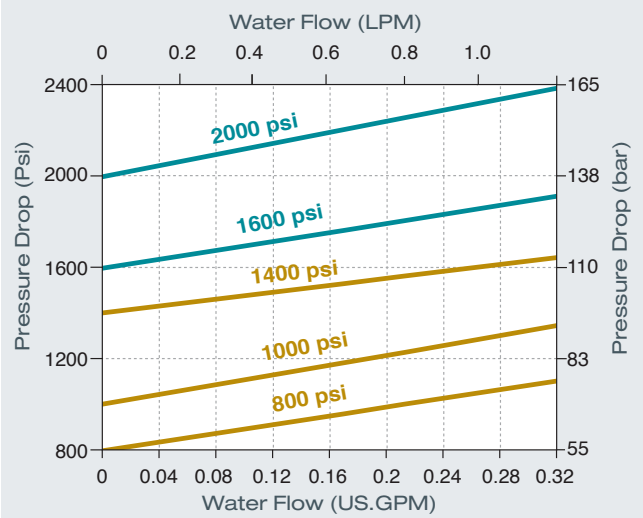

FLOW DATA AT 70°F (20°C)

Orifice in fully open mode is 3.6mm (0.14 inch)

SPRING 2250–3000psig

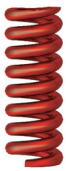

SPRING 3000–4000psig

AIR FLOW

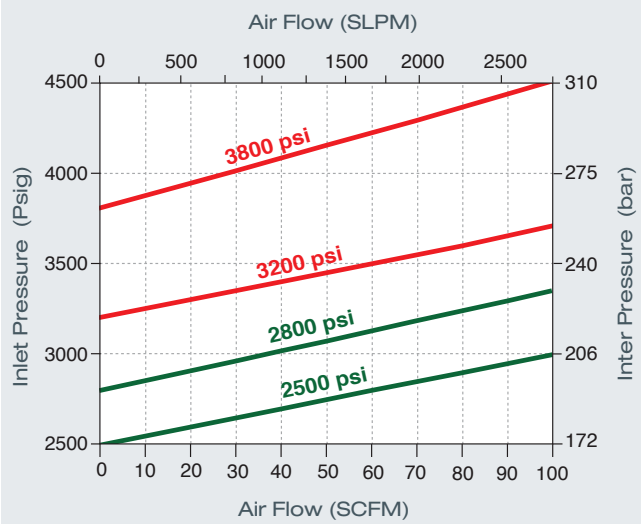

WATER FLOW

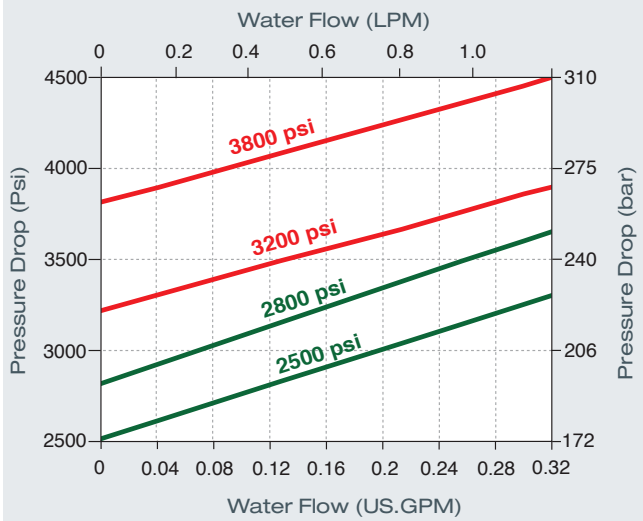

SPRING 4000–5000psig

SPRING 5000–6000psig

AIR FLOW

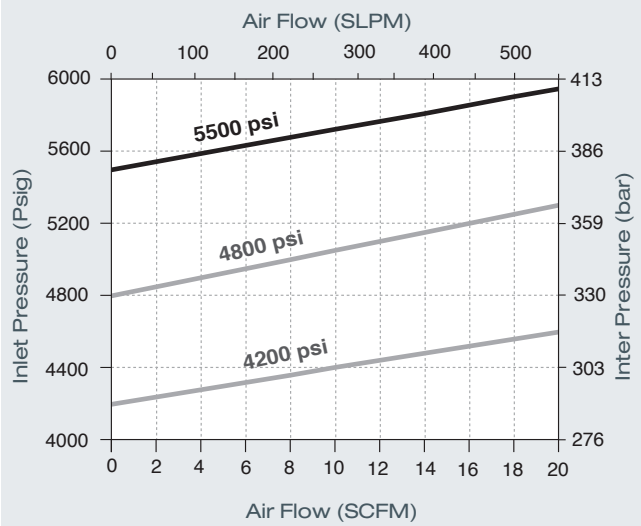

WATER FLOW

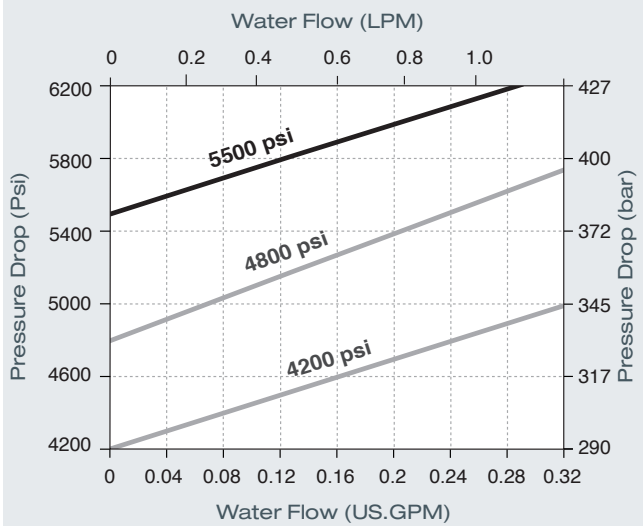

APPLICATIONS

H-900HP relief valves gradually open when pressure increases. As such, they are not certified to ASME due to not having capacity rating at a given pressure rise (accumulation).

OPERATION

H-900HP relief valves open when system pressure gets to the set pressure and close when system pressure drops below the set pressure.

Warning

- Valves that were not actuated for some time may contain pressure higher than the set pressure.
- System designer and users shall determine what system applications require using relief valves for meeting specific safety codes and which valves conform to such codes.

H-900HP ORDERING INFORMATION

H-9 00 - HP - SS - L - 1/4 - A - [ ] - [ ] - [ ]

OPTIONAL

Valve Series

Valve Type

00	- LET-LOK® Ends
85	- Male to Female End
95	- Male to LET-LOK® End

Body Material

SS	- 316 St.St.

End Connection

L	- LET-LOK®
N	- NPT
R	- ISO Tapered
NL	- NPT to LET-LOK®

For other end connections, please contact HAM-LET representative.

End Connection Size

1/4	6MM

Spring Designator

A, B, C, D, E, F, G, H

See table: "NOMINAL CRACKING PRESSURE RANGE"

Seal Material

BU	- Buna N
EP	- EPDM
NE	- Neoprene

Viton® Seals are standard.

CE/PED certification

BLANK	- Standard testing
CE	- Certification

Treatment

BLANK	- Standard Cleaning & Passivation
OC	- Oxygen Clean
LF	- Lubricant Free

SPRING KIT

Includeds:
Spring (specific to desired set pressure range) and label.

Z - 900 - HP - SPK - 1/4 - A

Body Designator per End Connection

1/4 for all end connections

Spring Designator

A, B, C, D, E, F, G, H

See table above

SEAL KIT

Includeds: O-Rings and label

Z - 900 - HP - SK - 1/4 - VI

Body Designator per End Connection

1/4 for all end connections

Seal Material

VI	- Viton®
BU	- Buna N
EP	- EPDM
NE	- Neoprene

Warning! For your safety

The system designer and user have the sole responsibility for selecting products suitable for their special application requirements, ensuring their safe and trouble-free installation, operation, and maintenance. Application details, material compatibility and product ratings should all be considered for each selected product. Improper selection, installation or use of products can cause property damage or personal injury.

Viton® - TM DuPont

H-900HP, Rev.07, August 2011

PNEUMATIC RACK AND PINION ACTUATORS

Advanced torque to size ratio

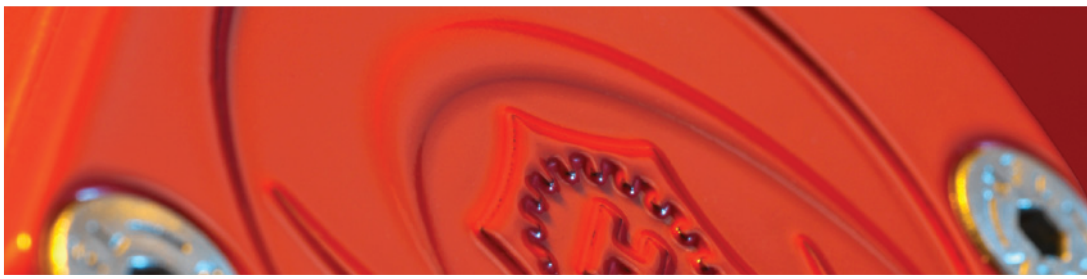

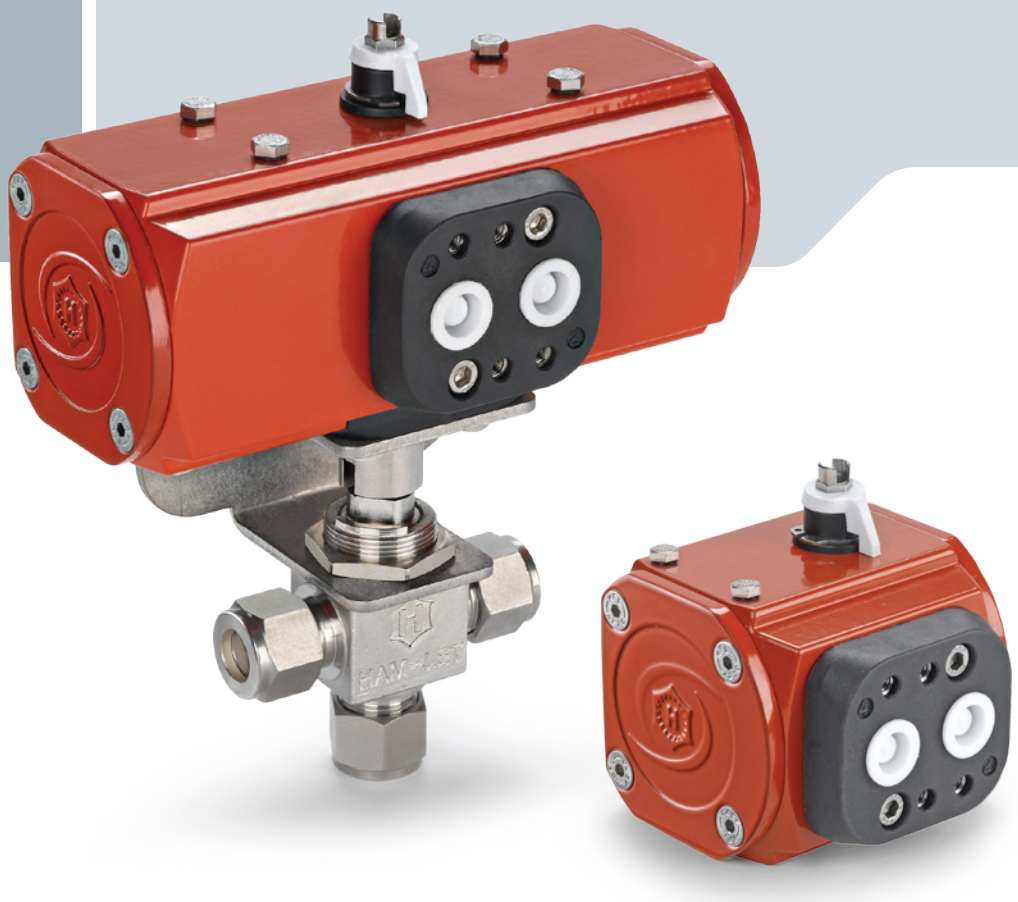

HAM-LET®
ADVANCED CONTROL TECHNOLOGY

HAM-LET PNEUMATIC ACTUATORS
HPA

FEATURES:

- Pneumatic Rack and Pinion Actuators
- 90° Actuation for 2-way valves (Straight & Angle)
- 180° Actuation for 3-way (T-type) valves
- Actuators comply with industry standards for interface with ISO 5211, NAMUR and VDI/VDE 3845
- Actuated valves are available factory assembled or seperately, actuator and mounting kits
- Aluminum actuators are available as standard, Stainless Steel and Electric actuators are available upon request
- Limit switches, proximity sensors, position indicators, pilot valves and other accessories are available upon request
- Standard Temperature range: -32°C to 90°C (-25.6°F to 194°F)
  Optional: High Temperature: -30°C to 120°C (-22°F to 248°F)
  Low Temperature: -50°C to 80°C (-58°F to 176°F)

GENERAL

- Four standard actuator sizes are available upon request: Mini (designator "**A1**"), Small (designator "**A2**") and 180° actuator (designator "**A2T**"), Medium (designator "**A3**"), and Large (designator "**A4**").
- Improved operational speed enables better valve opening and closing control.
- ATEX certification of Valves-Actuators assemblies is available on request at the time of order quotation.

MATERIAL OF CONSTRUCTION

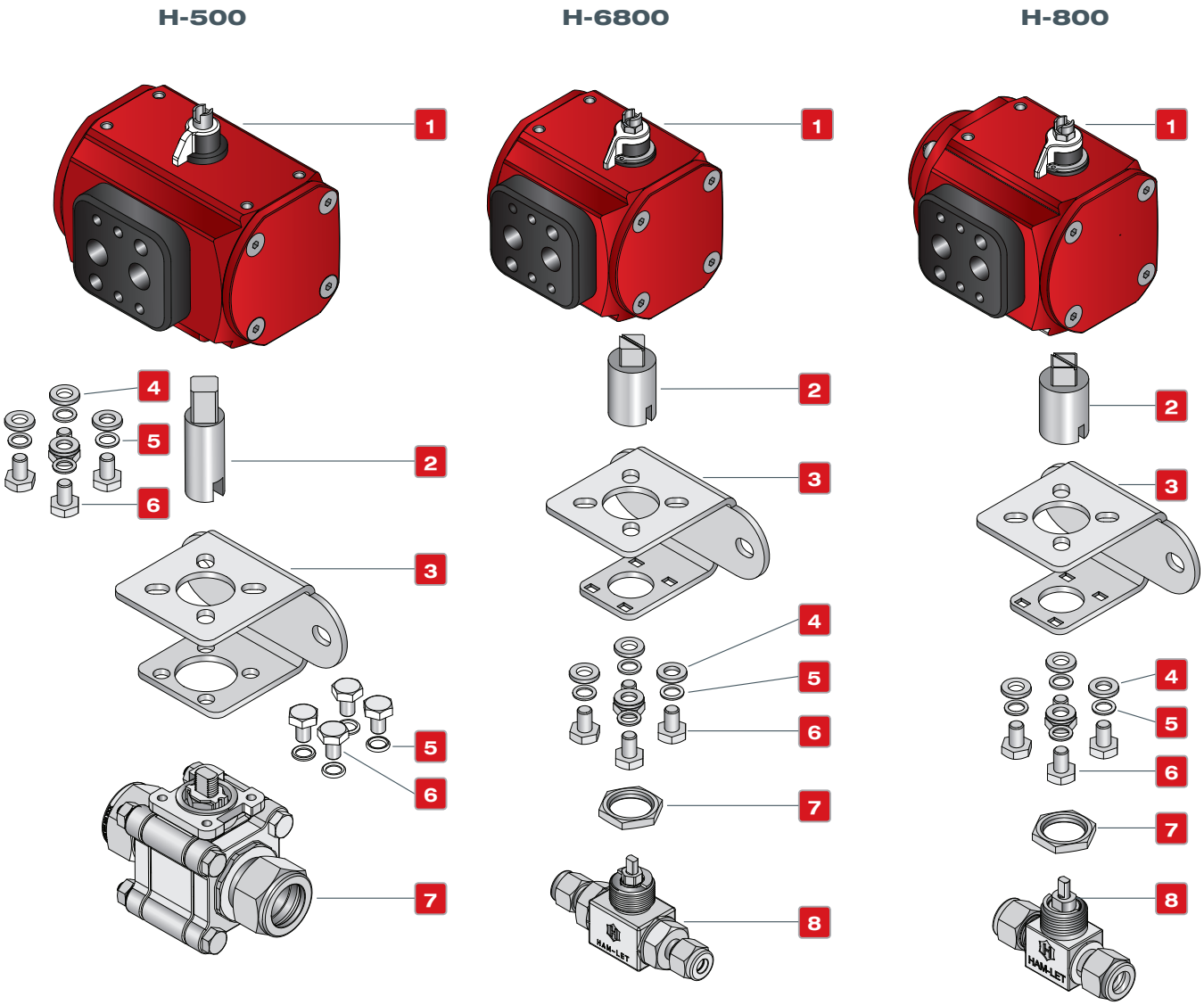

No.	H-500 SERIES			H-6800 SERIES			H-800 SERIES		
	Part	Qty.	Material	Part	Qty.	Material	Part	Qty.	Material
1	Actuator	1	Al 356-T5	Actuator	1	Al 356-T5	Actuator	1	Al 356-T5
2	Coupling	1	St.St.316	Coupling	1	St.St.316	Coupling	1	St.St.316
3	Bracket	1	St.St.304	Bracket	1	St.St.304	Bracket	1	St.St.304
4	Washer flat	4	St.St.304	Washer flat	4	St.St.304	Washer flat	4	St.St.304
5	Washer spring	8	St.St.304	Washer spring	4	St.St.304	Washer spring	4	St.St.304
6	Screw	8	St.St.304	Screw	4	St.St.304	Screw	4	St.St.304
7	H-500	1	St.St.316	Panel nut	1	St.St.316	Panel nut	1	St.St.316
8	-	-	-	H-6800	1	St.St.316	H-800	1	St.St.316

H-6800 SERIES

H-6800 High Performance Ball Valves features, materials of construction, and technical data are available in the H-6800 valves section.

Selection of Valve-Actuator assemblies provided herein is based on:
- Valve maximum allowable working pressure
- Ambient temperature (50 to 100°F /10 to 37°C)
- Actuator fits to valve based on operating pressure of 6 bar, as per table.

To order H-6800 ball valve factory assembled with an actuator, add the actuator designator to the valve part number / description per the below table.
For example:
H-6800-SS-L-1/4-PSS with standard Double Acting Aluminum Actuator
H-6800-SS-L-1/4-PS-A1
To order an actuator and mounting kit for field assembly:
Double acting Actuator ordering number: **Z-A1**
Corresponding mounting kit: **Z-6800-MK-1/4-F03-F04-A1**

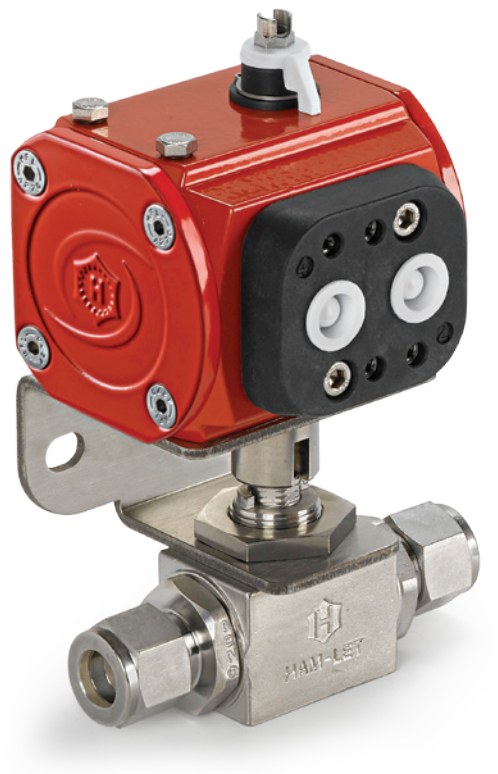

Table 1

Series	Ends Size	Seats	Minimum Actuator Operating Pressure Bar (Psi)	Actuator Designators (Factory assembled)			Actuator Ordering Code		Mounting Kit Ordering Info
				Spring Return		Double Acting	Spring Return	Double Acting	
				NO	NC				
H-6800	1/16”-3/8” (3mm-10mm)	TFM 1600 PCTFE PEEK	5 (72.5)	A1O	A1C	A1	Z-A1S	Z-A1	Z-6800-MK-1/4”-F03-F04-A1
	1/2”-3/4” (12mm18mm)	TFM 1600	5 (72.5)	A1O	A1C	A1	Z-A1S	Z-A1	Z-6800-MK-1/2”-F03-F04-A1
		PCTFE PEEK	5 (72.5)	A2O	A2C	A2	Z-A2S	Z-A2	Z-6800-MK-1/2”-F03-F04-A2
H-6800 T-type	1/16”-3/8” (3mm-10mm)	TFM 1600 PCTFE PEEK	5 (72.5)	A2TS	A2TS	A2T	Z-A2TS	Z-A2T	Z-6800-MK- 1/4”-F03-F04-A2
	1/2”-3/4” (12mm-18mm)								Z-6800-MK-1/2”-F03-F04-A2

Ham-Let ISO 5211 mounting kits for H-6800 Series contain:

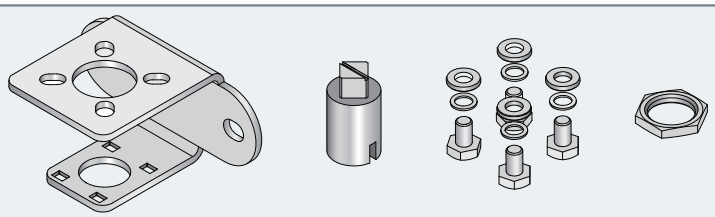

Mounting Kit ordering Information describes interface per ISO 5211.
for example: Z-6800-MK-1/2-F03-F04 complies with: ISO 5211 flange types F03-F04

Part	Qty	Material
Coupling	1	St.St 316
Bracket	1	St.St 304
Screw	4	St.St 304
Washer spring	4	St.St 304
Washer flat	4	St.St 304
Panel nut	1	St.St 316
Mounting instructions	1	-

Please contact your local representative for ordering information on Lubricant Free Actuated Valves

H-800 SERIES

H-800 One Piece Ball Valves features, materials of construction, and technical data, are available in the H-800 valves section.

Selection of Valve-Actuator assemblies provided herein is based on:
- Valve maximum allowable working pressure
- Ambient temperature (50 to 100°F / 10 to 37°C)
- Actuator fits to valve based on operating pressure of 6 bar, as per table.

To order H-800 ball valve factory assembled with an actuator, the actuator designator shall be added to the valve part number / description per the below table. For example:
H-800S-SS-L-1/4 with standard Spring Return Aluminum Actuator Normally Closed
H-800S-SS-L-1/4-A1C
To order an actuator and mounting bracket kit for field assembly:
Spring Return Actuator ordering number: **Z-A1S**
Corresponding mounting bracket kit: **Z-800S-MK-F03-F04-A1**

Table 2

Series	Ends Size	Seats	Minimum Actuator Operating Pressure Bar (Psi)	Actuator Designators (Factory Assembled)			Actuator Ordering Code		Mounting Kit Ordering info
				Spring Return		Double Acting	Spring Return	Double Acting	
				NO	NC				
H-800	S	PFA	5 (72.5)	A1O	A1C	A1	Z-A1S	Z-A1	Z-800S-MK-F03-F04-A1
	M			A1O	A1C		Z-A1S		Z-800M-MK-F03-F04-A1
	L			A2O	A2C		Z-A2S		SR: Z-800L-MK-F03-F04-A2 DA: Z-800L-MK-F03-F04-A1
H-800 T-Type	S	PFA	5 (72.5)	A2TS	A2TS	A2T	Z-A2TS	Z-A2T	Z-800S-MK-F03-F04-A2
	M								Z-800M-MK-F03-F04-A2
	L								Z-800L-MK-F03-F04-A2

Ham-Let ISO 5211 mounting kits for H-6800 Series contain:

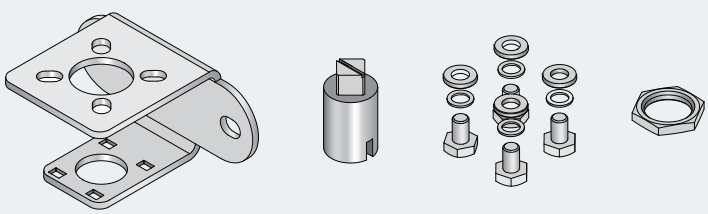

Mounting Kit ordering Information describes interface per ISO 5211.
for example: Z-6800-MK-1/2-F03-F04 complies with: ISO 5211 flange types F03-F04

Part	Qty	Material
Coupling	1	St.St 316
Bracket	1	St.St 304
Screw	4	St.St 304
Washer spring	4	St.St 304
Washer flat	4	St.St 304
Panel nut	1	St.St 316
Mounting instructions	1	-

Please contact your local representative for ordering information on Lubricant Free Actuated Valves

H-500 SERIES

H-500 Three Piece Ball Valves features, materials of construction, and technical data, are available in the H-500 valves section.

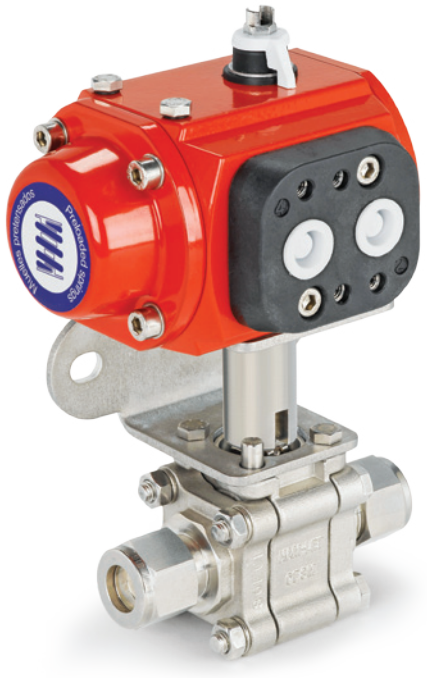

Selection of Valve-Actuator assemblies provided herein is based on:

- Valve maximum allowable working pressure
- Ambient temperature (50 to 100°F / 10 to 37°C)
- Actuator fits to valve based on operating pressure of 6 bar, as per table.

To order H-500 ball valve factory assembled with an actuator, the actuator designator shall be added to the valve part number/description per the below table.
For example:
H-500-SS-L-3/4-T with standard Double Acting Aluminum Actuator
H-500-SS-L-3/4-T-A2
To order an actuator and mounting kit for field assembly:
Spring Return Actuator ordering number: **Z-A2**
Corresponding mounting kit: **Z-500-MK-3/4 -F03-F04-A2**

Please contact your local representative for ordering information on Lubricant Free Actuated Valves

Table 3

Series	Ends Size	Seats	Minimum Actuator Operating Pressure Bar (Psi)	Actuator Designators (Factory Assembled)			Actuator Ordering Code		Mounting Kit Ordering Info
				Spring Return		Double Acting	Spring Return	Double Acting	
				NO	NC				
H-500S	1/4", 3/8" (6 mm, 10 mm)	TFM 1600	5 (72.5)	A1O	A1C	A1	Z-A1S	Z-A1	Z-500-MK-1/4"-F03-F04-A1
H-500	1/4"-1/2" (6 mm-12 mm)	PTFE TFM 1600	5 (72.5)	A2O	A2C	A1	Z-A2S	Z-A1	SR: Z-500-MK-1/2"-F03-F04-A2 DA: Z-500-MK-1/2"-F03-F04-A1
		St.St. PTFE	5 (72.5)	A2O	A2C	A2	Z-A2S	Z-A2	Z-500-MK-1/2"-F03-F04-A2
		PEEK	5 (72.5)	A4O	A4C	A3	Z-A4S	Z-A3	SR: Z-500-MK-1/2"-F05-F07-A4 DA: Z-500-MK-1/2"-F04-F05-A3
	3/4" (20 mm)	PTFE TFM 1600	5 (72.5)	A2O	A2C	A2	Z-A2S	Z-A2	Z-500-MK-3/4"-F03-F04-A2
		St.St. PTFE	5 (72.5)	A3O	A3C	A2	Z-A3S	Z-A2	SR: Z-500-MK-3/4"-F04-F05-A3 DA: Z-500-MK-3/4"-F03-F04-A2
		PEEK	5 (72.5)	A4O	A4C	A4	Z-A4S	Z-A4	Z-500-MK-3/4"-F05-F07-A4
	1" (25 mm)	PTFE TFM 1600 St.St. PTFE	5 (72.5)	A4O	A4C	A3	Z-A4S	Z-A3	SR: Z-500-MK-1"-F05-F07-A4 DA: Z-500-MK-1"-F04-F05-A3
		PEEK	5 (72.5)	A4O	A4C	A4	Z-A4S	Z-A4	Z-500-MK-1"-F05-F07-A4

Ham-Let ISO 5211 mounting kits for H-500 Series contain:

Note: Mounting Kit ordering Information describes interface per ISO 5211. For example: Z-500-MK-3/4-F03-F04 complies with: ISO 5211 flange types F03-F04

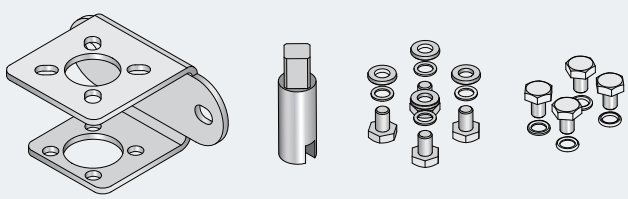

Part	Qty	Material
Coupling	1	St.St 316
Bracket	1	St.St 304
Screw	8	St.St 304
Washer spring	8	St.St 304
Washer flat	4	St.St 304
Panel nut	1	St.St 316
Mounting instructions	1	-

Dimensions for Assembled Actuators - H-800 & H-6800 2-WAY VALVE SERIES

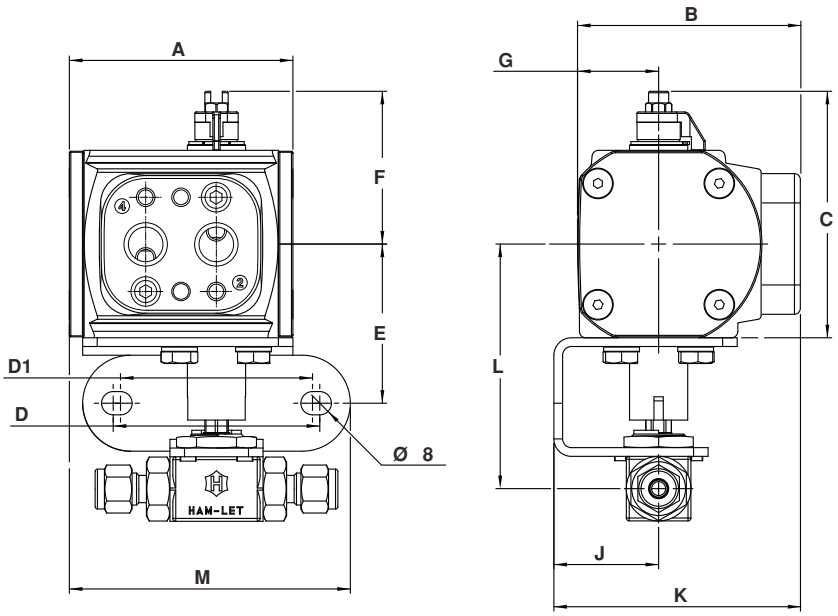

Series	Body Designator	Ends Size	Seats Material	Actuator Model		Units	A	B	C	D	D1	E	F	G	J	K	L	M
H-6800	1/4”	1/16”-3/ 8” (3mm-10mm)	TFM 1600 PCTFE PEEK	SR	A1S	mm	96.5	76.1	84.1	71	66	54.7	51.8	27.9	35	83.2	88.5	116.2
						inch	3.8	3.0	3.31	2.8	2.6	2.15	2.04	1.1	1.38	3.27	3.48	4.57
				DA	A1	mm	76.8	76.1	84.1	71	66	54.7	51.8	27.9	35	83.2	88.5	96.6
						inch	3.02	3.0	3.31	2.8	2.6	2.15	2.04	1.1	1.38	3.27	3.48	3.8
	1/2”	1/2”-3/4” (12mm-18mm)	TFM 1600	SR	A1S	mm	96.5	76.1	84.1	71	66	54.7	51.8	27.9	35	83.2	93.2	116.2
						inch	3.8	3.0	3.31	2.8	2.6	2.15	2.04	1.1	1.38	3.27	3.67	4.57
				DA	A1	mm	76.8	76.1	84.1	71	66	54.7	51.8	27.9	35	83.2	93.2	96.6
						inch	3.02	3.0	3.31	2.8	2.6	2.15	2.04	1.1	1.38	3.27	3.67	3.8
			PCTFE PEEK	SR	A2S	mm	140.2	76.1	88.6	71	66	59.7	51.8	27.9	35	83.2	97.7	x
						inch	5.52	3.0	3.49	2.8	2.6	2.35	2.04	1.1	1.38	3.27	3.85	x
				DA	A2	mm	101	76.1	88.6	71	66	59.7	51.8	27.9	35	83.2	97.7	x
						inch	3.97	3.0	3.49	2.8	2.6	2.35	2.04	1.1	1.38	3.27	3.85	x
H-800	S	1/16”-1/4” (3mm-6mm)	PFA	SR	A1S	mm	96.5	76.1	84.1	71	66	54.7	51.8	27.9	35	83.2	85.8	116.2
						inch	3.8	3.0	3.31	2.8	2.6	2.15	2.04	1.1	1.38	3.27	3.48	4.57
				DA	A1	mm	76.8	76.1	84.1	71	66	54.7	51.8	27.9	35	83.2	85.8	96.6
						inch	3.02	3.0	3.31	2.8	2.6	2.15	2.04	1.1	1.38	3.27	3.48	3.8
	M	1/4”-3/8” (6mm-8mm)		SR	A1S	mm	96.5	76.1	84.1	71	66	54.7	51.8	27.9	35	83.2	88.4	116.2
						inch	3.8	3.0	3.31	2.8	2.6	2.15	2.04	1.1	1.38	3.27	3.48	4.57
				DA	A1	mm	76.8	76.1	84.1	71	66	54.7	51.8	27.9	35	83.2	88.4	96.6
						inch	3.02	3.0	3.31	2.8	2.6	2.15	2.04	1.1	1.38	3.27	3.48	3.8
	L	3/8”-1/2” (10mm-12mm)		SR	A2S	mm	140.2	76.1	88.6	71	66	59.7	51.8	27.9	35	83.2	95.9	x
						inch	5.52	3.0	3.49	2.8	2.6	2.35	2.04	1.1	1.38	3.27	3.77	x
				DA	A1	mm	76.8	76.1	84.1	71	66	54.7	51.8	27.9	35	83.2	91.4	96.6
						inch	3.02	3.0	3.31	2.8	2.6	2.15	2.04	1.1	1.38	3.27	3.6	3.8

Dimensions for Assembled Actuators - H-500 SERIES

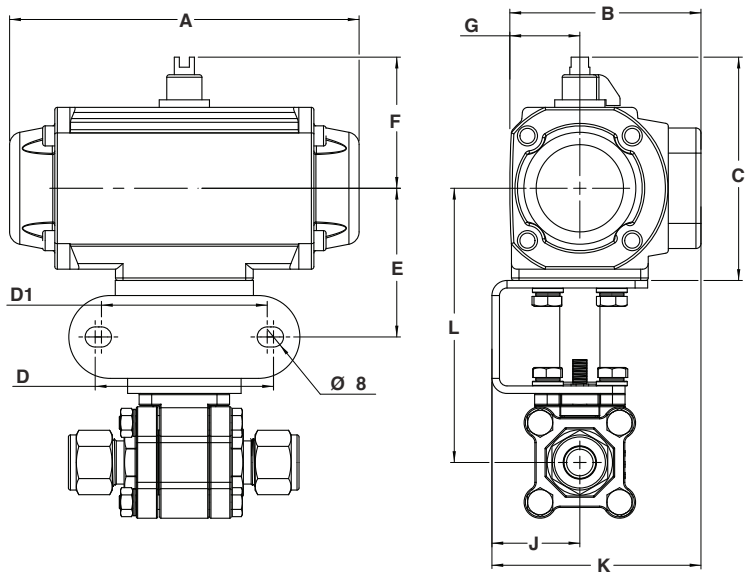

Series	Body Designator	Ends Size	Seats Material	Actuator Model		Units	A	B	C	D	D1	E	F	G	J	K	L
H-500S	1/4"	1/4",3/8" (6mm, 10mm)	TFM 1600	SR	A1S	mm	95.8	76.1	84.1	33.0	29.0	48.2	51.8	27.9	31.0	79.2	88.2
						inch	3.77	3.00	3.31	1.30	1.14	1.90	2.04	1.10	1.22	3.12	3.47
				DA	A1	mm	76.9	76.1	84.1	33.0	29.0	48.2	51.8	27.9	31.0	79.2	88.2
						inch	3.03	3.00	3.31	1.30	1.14	1.90	2.04	1.10	1.22	3.12	3.47
H-500	1/2"	1/4"-1/2" (6mm-12mm)	PTFE TFM 1600	SR	A2S	mm	140.2	76.1	88.6	71	66	59.7	51.8	27.9	35	83.2	109.2
						inch	5.52	3.0	3.49	2.8	2.6	2.35	2.04	1.1	1.38	3.27	4.3
				DA	A1	mm	76.8	76.1	84.1	71	66	54.7	51.8	27.9	35	83.2	104.7
						inch	3.02	3.0	3.31	2.8	2.6	2.15	2.04	1.1	1.38	3.27	4.12
			St.St. PTFE	SR	A2S	mm	140.2	76.1	88.6	71	66	59.7	51.8	27.9	35	83.2	109.2
						inch	5.52	3.0	3.49	2.8	2.6	2.35	2.04	1.1	1.38	3.27	4.3
				DA	A2	mm	101	76.1	88.6	71	66	59.7	51.8	27.9	35	83.2	109.2
						inch	3.97	3.0	3.49	2.8	2.6	2.35	2.04	1.1	1.38	3.27	4.3
			PEEK	SR	A4S	mm	200.8	109.4	128.5	71.0	66.0	71.7	79.2	47.7	44.0	105.7	121.7
						inch	7.91	4.31	5.06	2.80	2.60	2.82	3.12	1.88	1.73	4.16	4.79
				DA	A3	mm	152.3	84.1	111.3	71	66	65.7	68.1	31.9	44	96.2	115.7
						inch	6.0	3.31	4.38	2.8	2.6	2.58	2.68	1.25	1.73	3.79	4.55
	3/4"	3/4" (18mm)	PTFE	SR	A2S	mm	140.2	76.1	88.6	71	66	59.7	51.8	27.9	35	83.2	112.5
						inch	5.52	3.0	3.49	2.8	2.6	2.35	2.04	1.1	1.38	3.27	4.43
				DA	A2	mm	101	76.1	88.6	71	66	59.7	51.8	27.9	35	83.2	112.5
						inch	3.97	3.0	3.49	2.8	2.6	2.35	2.04	1.1	1.38	3.27	4.43
			TFM 1600	SR	A2S	mm	140.2	76.1	88.6	71	66	59.7	51.8	27.9	35	83.2	112.5
						inch	5.52	3.0	3.49	2.8	2.6	2.35	2.04	1.1	1.38	3.27	4.43
				DA	A1	mm	76.8	76.1	84.1	71	66	54.7	51.8	27.9	35	83.2	108
						inch	3.02	3.0	3.31	2.8	2.6	2.15	2.04	1.1	1.38	3.27	4.25
			St.St. PTFE	SR	A3S	mm	152.3	84.1	111.3	71	66	65.7	68.1	31.9	44	96.2	119
						inch	6.0	3.31	4.38	2.8	2.6	2.58	2.68	1.25	1.73	3.79	4.68
				DA	A2	mm	101	76.1	88.6	71	66	59.7	51.8	27.9	35	83.2	112.5
						inch	3.97	3.0	3.49	2.8	2.6	2.35	2.04	1.1	1.38	3.27	4.43
			PEEK	SR	A4S	mm	200.8	109.4	128.5	71.0	66.0	71.7	79.2	47.7	44.0	105.7	125.0
						inch	7.91	4.31	5.06	2.80	2.60	2.82	3.12	1.88	1.73	4.16	4.92
				DA	A4	mm	200.8	109.4	128.5	71.0	66.0	71.7	79.2	47.7	44.0	105.7	125.0
						inch	7.91	4.31	5.06	2.80	2.60	2.82	3.12	1.88	1.73	4.16	4.92

Dimensions for Assembled Actuators - H-500 SERIES

(Cont'd)

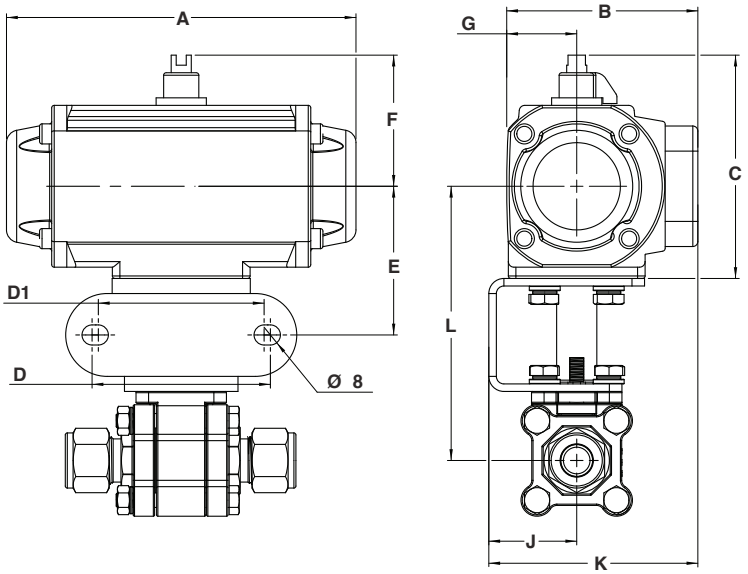

Series	Body Designator	Ends Size	Seats Material	Actuator Model		Units	A	B	C	D	D1	E	F	G	J	K	L
H-500	1"	1" (25mm)	PTFE	SR	A3S	mm	152.3	84.1	111.3	71	66	65.7	68.1	31.9	44	96.2	125.7
						inch	6.0	3.31	4.38	2.8	2.6	2.58	2.68	1.25	1.73	3.79	4.95
				DA	A3	mm	152.3	84.1	111.3	71	66	65.7	68.1	31.9	44	96.2	125.7
						inch	6.0	3.31	4.38	2.8	2.6	2.58	2.68	1.25	1.73	3.79	4.95
			TFM 1600	SR	A2S	mm	140.2	76.1	88.6	71	66	59.7	51.8	27.9	35	83.2	119.2
						inch	5.52	3.0	3.49	2.8	2.6	2.35	2.04	1.1	1.38	3.27	4.7
				DA	A1	mm	76.8	76.1	84.1	71	66	54.7	51.8	27.9	35	83.2	114.7
						inch	3.02	3.0	3.31	2.8	2.6	2.15	2.04	1.1	1.38	3.27	4.51
			St.St. PTFE	SR	A4S	mm	200.8	109.4	128.5	71.0	66.0	71.7	79.2	47.7	44.0	105.7	131.7
						inch	7.91	4.31	5.06	2.80	2.60	2.82	3.12	1.88	1.73	4.16	5.19
				DA	A3	mm	152.3	84.1	111.3	71	66	65.7	68.1	31.9	44	96.2	125.7
						inch	6.0	3.31	4.38	2.8	2.6	2.58	2.68	1.25	1.73	3.79	4.95
			PEEK	SR	A4S	mm	200.8	109.4	128.5	71.0	66.0	71.7	79.2	47.7	44.0	105.7	131.7
						inch	7.91	4.31	5.06	2.80	2.60	2.82	3.12	1.88	1.73	4.16	5.19
				DA	A4	mm	200.8	109.4	128.5	71.0	66.0	71.7	79.2	47.7	44.0	105.7	131.7
						inch	7.91	4.31	5.06	2.80	2.60	2.82	3.12	1.88	1.73	4.16	5.19

Dimensions for Assembled 180° Actuators - H-800 T-TYPE & H-6800 T-TYPE SERIES

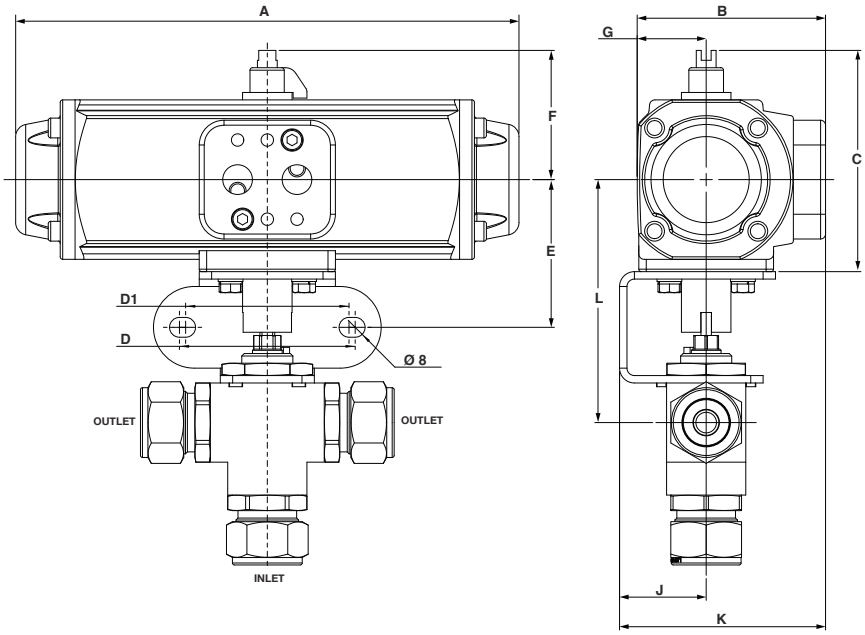

Series	Body Designator	Ends Size	Seats Material	Actuator Model		Units	A	B	C	D	D1	E	F	G	J	K	L
H-6800 T-type	1/4”	1/16”-3/ 8” (3mm-10mm)	TFM 1600 PCTFE PEEK	SR	A2ST	mm	204.4	76.1	88.6	71	66	59.7	51.8	27.9	35	83.2	93.0
						inch	8.05	3.0	3.49	2.8	2.6	2.35	2.04	1.1	1.38	3.27	3.66
				DA	A2T	mm	165.4	76.1	88.6	71	66	59.7	51.8	27.9	35	83.2	93.0
						inch	6.51	3.0	3.49	2.8	2.6	2.35	2.04	1.1	1.38	3.27	3.66
	1/2”	1/2”-3/4” (12mm-18mm)	TFM 1600	SR	A2ST	mm	204.4	76.1	88.6	71	66	59.7	51.8	27.9	35	83.2	97.7
						inch	8.05	3.0	3.49	2.8	2.6	2.35	2.04	1.1	1.38	3.27	3.85
				DA	A2T	mm	165.4	76.1	88.6	71	66	59.7	51.8	27.9	35	83.2	97.7
						inch	6.51	3.0	3.49	2.8	2.6	2.35	2.04	1.1	1.38	3.27	3.85
H-800 T-type	S	1/16”-1/4” (3mm-6mm)	PFA	SR	A2ST	mm	204.4	76.1	88.6	71	66	59.7	51.8	27.9	35	83.2	90.3
						inch	8.05	3.0	3.49	2.8	2.6	2.35	2.04	1.1	1.38	3.27	3.55
				DA	A2T	mm	165.4	76.1	88.6	71	66	59.7	51.8	27.9	35	83.2	90.3
						inch	6.51	3.0	3.49	2.8	2.6	2.35	2.04	1.1	1.38	3.27	3.55
	M	1/4”-3/8” (6mm-8mm)		SR	A2ST	mm	204.4	76.1	88.6	71	66	59.7	51.8	27.9	35	83.2	92.9
						inch	8.05	3.0	3.49	2.8	2.6	2.35	2.04	1.1	1.38	3.27	3.66
				DA	A2T	mm	165.4	76.1	88.6	71	66	59.7	51.8	27.9	35	83.2	92.9
						inch	6.51	3.0	3.49	2.8	2.6	2.35	2.04	1.1	1.38	3.27	3.66
	L	3/8”-1/2” (10mm-12mm)		SR	A2ST	mm	204.4	76.1	88.6	71	66	59.7	51.8	27.9	35	83.2	95.9
						inch	8.05	3.0	3.49	2.8	2.6	2.35	2.04	1.1	1.38	3.27	3.77
				DA	A2T	mm	165.4	76.1	88.6	71	66	59.7	51.8	27.9	35	83.2	95.9
						inch	6.51	3.0	3.49	2.8	2.6	2.35	2.04	1.1	1.38	3.27	3.77

ALUMINUM PNEUMATIC ACTUATOR - TECHNICAL DATA

A1S: SPRING RETURN

A1: DOUBLE ACTING

DISASSEMBLY

No.	Description	Qty	Material
1	Cap allen screw	8	AISI-304 stainless steel
2	Double acting cap	2	Aluminum alloy (2)+(5)
3	Cap O-ring	2	N.B.R
4	Piston	1	Polyarilamide
5	Cylinder	1	Aluminum alloy (2)+(1)
6	Washer	1	Polyamide 6
7	Spring clip	1	Stainless steel
8	Position indicator	1	Polyacetal
9	Plate O-ring	2	N.B.R.
10	Guide ring	1	Polyacetal + mb
11	Piston O-ring	1	N.B.R.
12	Shaft O-ring	1	N.B.R.
13	Shaft O-ring	1	N.B.R.
14	Preloaded springs	6	DIN-17223-c (3) (4)
15	Spring return cap	1	Aluminum alloy (2) + (5)
16	Shaft	1	Polyamide + S.S.Insert
17	Drive adapter	1	AISI-316 stainless steel
18	Spring return cap washer	4	AISI-304 stainless steel
19	Nut	4	AISI-304 stainless steel
20	Pneumatic connection plate	1	Polyamide + FG
21	Plate allen screw	2	AISI-304 stainless steel
22	Watertightness plane gasket	1	N.B.R

1. Covered with polyamide.
2. Covered by cataphoresis.
3. Variable quantity, please see the Spring return torque chart.
4. Trivalent chrominium passivation.
5. Polyurethane

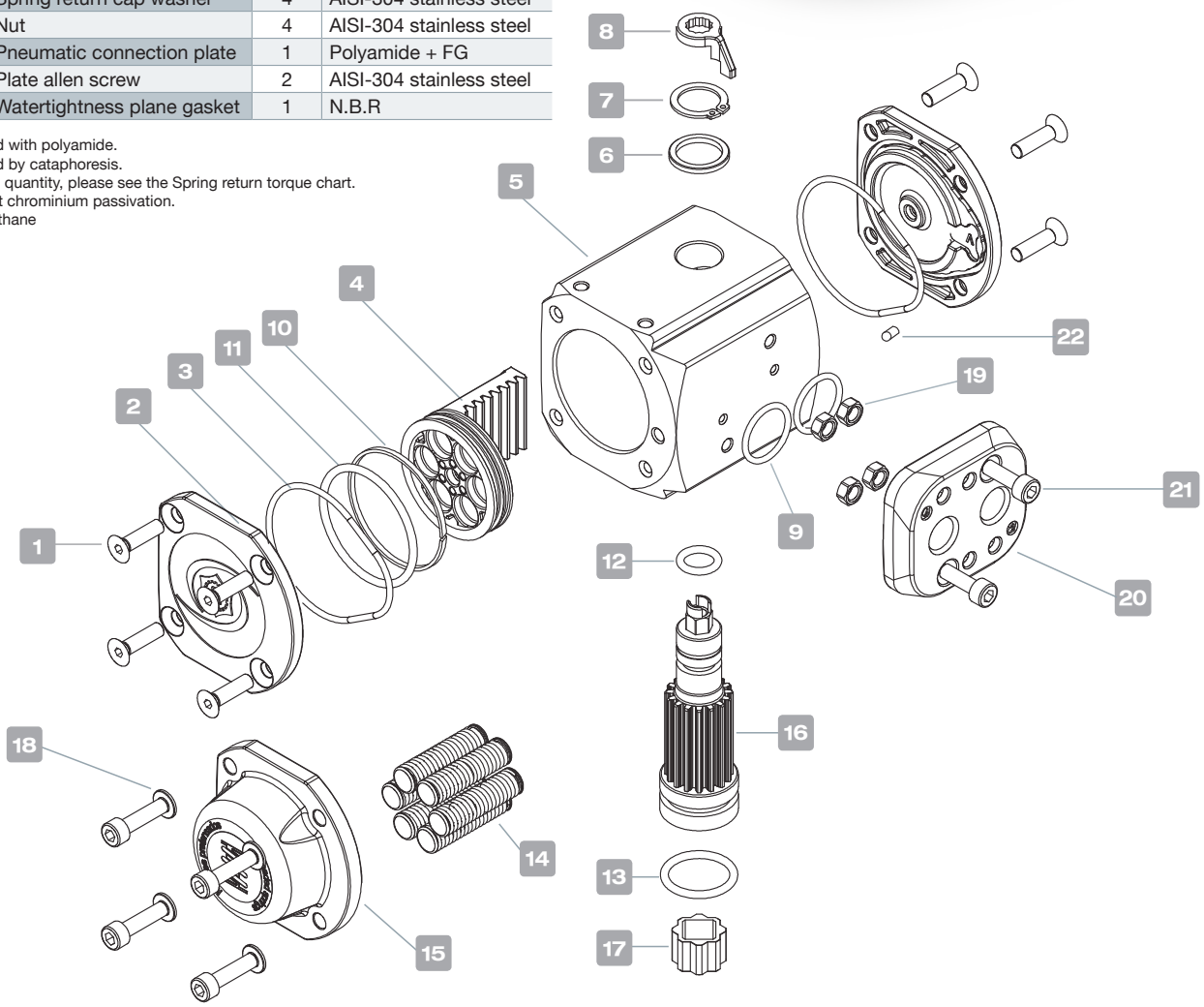

Model	Cycle time in (sec)		Weight		Capacity in litres	
	To open	To close	Kg.	Lb.	To open	To close
A1	0,1	0,1	0,65	1.43	0,07	0,03
A1S	0,15	0,15	0.72	1.58	0,07	

Cycle time w/o resistant torque at 6 bar.
Dimensions in mm.

To calculate the consumption, multiply the above figures by the real working pressure.

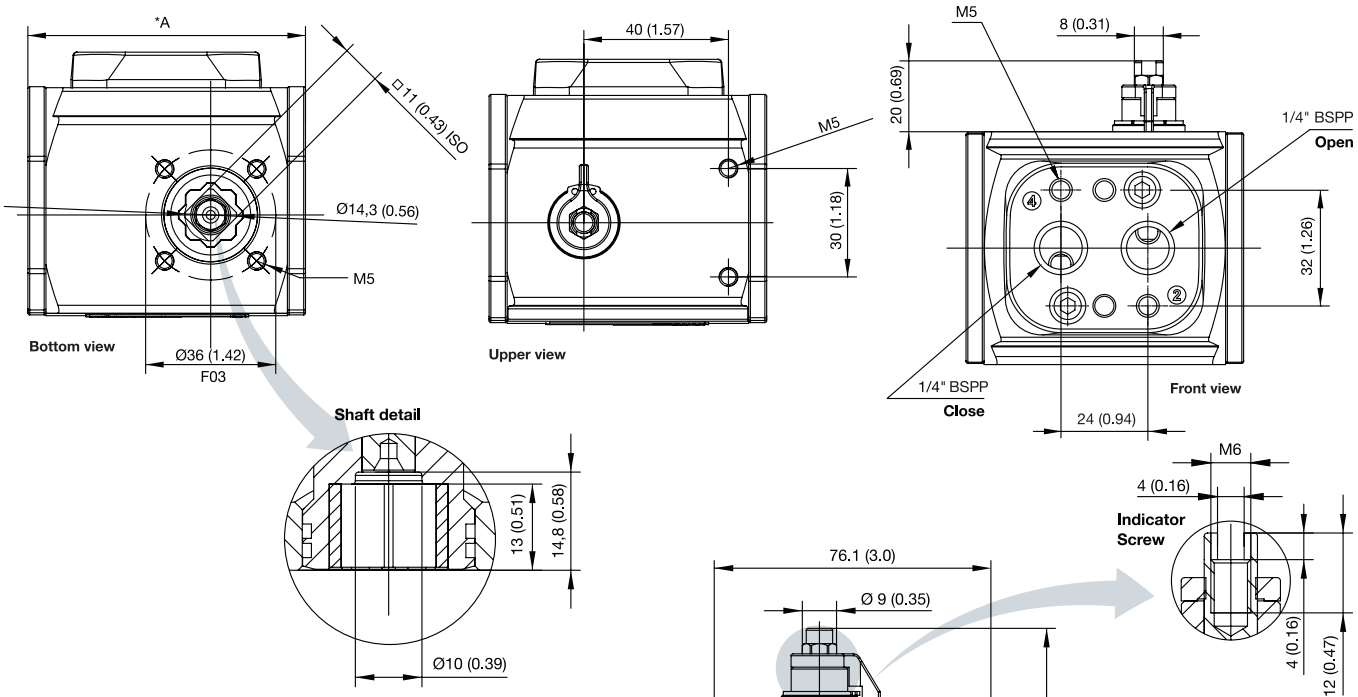

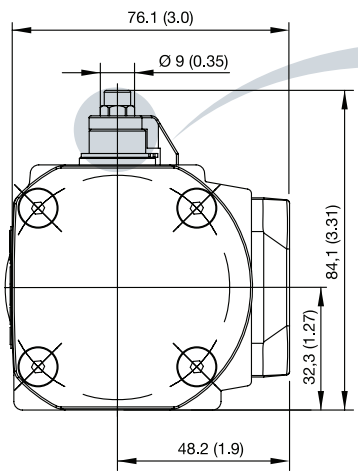

*For Spring Return Actuator: A = 96.5mm (3.8 inch)
For Double Acting Actuator: A = 76.8mm (3.02 inch)

DOUBLE ACTING TORQUES

A1	Air pressure						
Bar	3	4	5	5,5	6	7	8
PSI	43,5	58	72,5	79,8	87	101,5	116
Nm	4.0	5.5	7.0	7.7	8.5	9.8	11.2
Lb.in	35.4	48.7	62.0	68.2	75.2	86.7	99.1

SPRING RETURN TORQUES

A1S	Spring Torques		Air torque at indicated pressure														
			3		4		5		5,5		6		7		8		bar
			43,5		58		72,5		79,8		87		101,5		116		p.s.i
N	Initial	End	Initial	End	Initial	End	Initial	End	Initial	End	Initial	End	Initial	End	Initial	End	
6*	5.8	4					3	1.2	3.7	1.9	4.5	2.7	5.8	4	7.2	5.4	Nm
	51.3	35.6					26.4	10.6	32.6	16.8	39.7	23.9	51.2	35.4	63.5	47.8	Lb.in
5	4.9	3.4			2.1	0.6	3.6	2.1	4.3	2.8	5.1	3.6	6.4	4.9	7.8	6.3	Nm
	43.4	30.1			18.6	5.3	31.9	18.6	38.1	24.8	45.1	31.9	56.6	43.4	69	55.8	Lb.in
4	4	2.8			2.7	1.5	4.2	3	4.9	3.7	5.7	4.5	7	5.8	8.4	7.2	Nm
	35.6	24.4			24.3	13.1	37.5	26.3	43.7	32.5	50.8	39.6	62.3	51.1	74.7	63.5	Lb.in
3	3.2	2.1	1.9	0.8	3.4	2.3	4.9	3.8	5.6	4.5	6.4	5.3	7.7	6.6			Nm
	28	18.6	16.8	7.4	30.1	20.7	43.4	34	49.6	40.2	56.6	47.2	68.2	58.7			Lb.in
2	2.3	1.4	2.6	1.7	4.1	3.2	5.6	4.7	6.3	5.4	7.1	6.2					Nm
	20.4	12.4	23	15	36.3	28.3	49.6	41.6	55.8	47.8	62.8	54.9					Lb.in

N: Number of springs per side

* Standard number of springs

ALUMINUM PNEUMATIC ACTUATOR - TECHNICAL DATA

A2: DOUBLE ACTING

A2S: SPRING RETURN

DISASSEMBLY

No.	Description	QTY	Material
1	Cap allen screw	8	AISI-304 stainless steel
2	Double acting cap	2	Aluminum alloy (2)+(5)
3	Cap O-ring	2	N.B.R
4	Piston	2	Polyarilamide
5	Cylinder	1	Aluminum alloy (2)+(1)
6	Washer	1	Polyamide 6
7	Spring clip	1	Stainless steel
8	Position indicator	1	Polyacetal
9	Plate O-ring	2	N.B.R.
10	Guide ring	2	Polyacetal + mb
11	Piston O-ring	2	N.B.R.
12	Shaft O-ring	2	N.B.R.
13	Shaft O-ring	2	N.B.R.
14	Preloaded springs	12	DIN-17223-c (3) (4)
15	Base plate (iso-5211)	1	Polyamide + FG
16	Shaft	1	Polyamide + S.S.Insert
17	Drive adapter	1	AISI-316 stainless steel
18	Cap washer	8	AISI-304 stainless steel
19	Allen screw	2	AISI-304 stainless steel
20	Nut	4	AISI-304 stainless steel
21	Nut	4	AISI-304 stainless steel
22	Pneumatic connection plate	1	Polyamide + FG
23	Plate allen screw	2	AISI-304 stainless steel
24	Spring returen cap	2	Aluminum alloy (2)+(5)

1. Covered with polyamide.
2. Covered by cataphoresis.
3. Variable quantity, please see the Spring return torque chart.
4. Trivalent chromium passivation.
5. Polyurethane

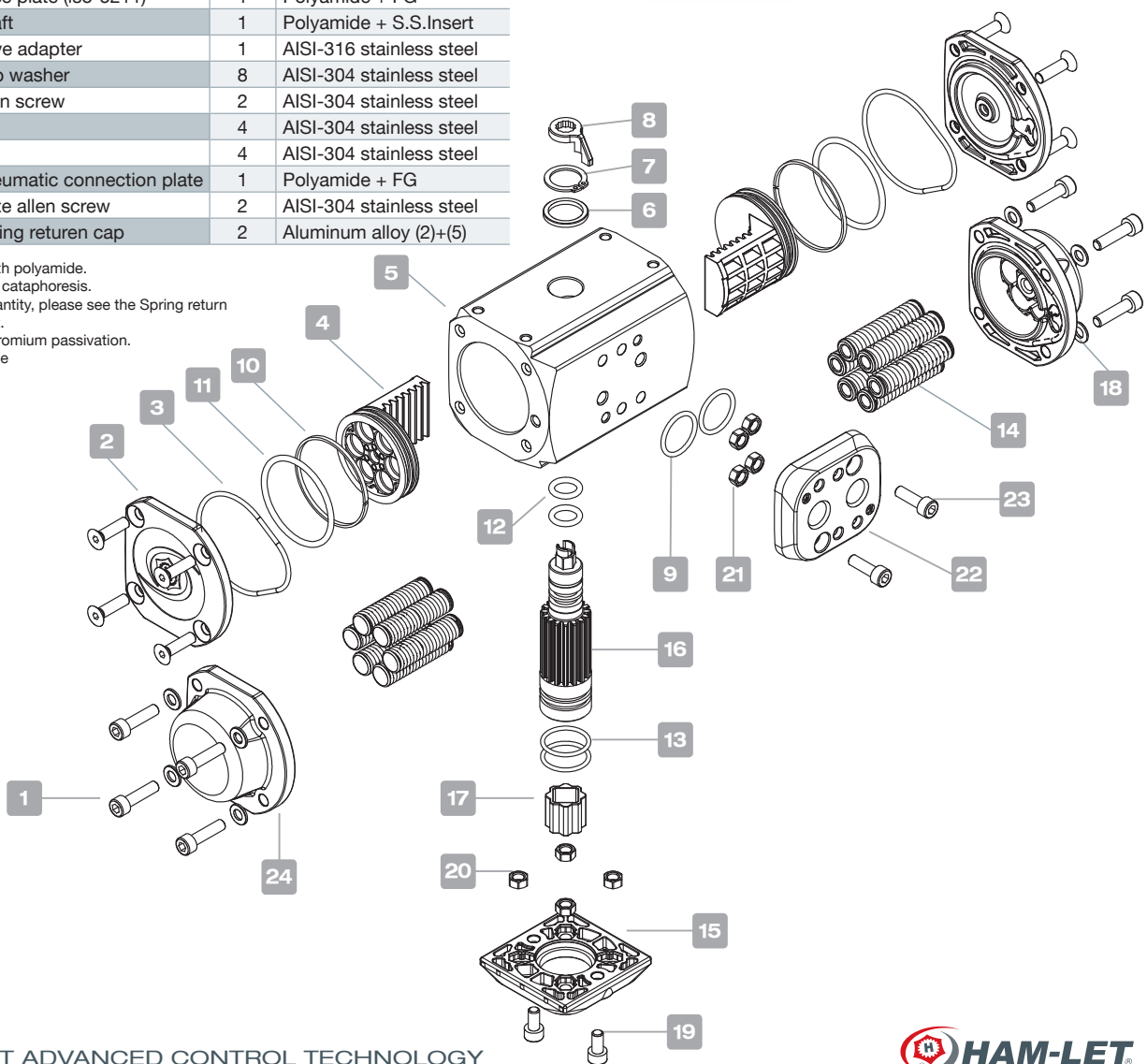

Model	Cycle time in (sec)		Weight		Capacity in litres	
	To open	To close	Kg.	Lb.	To open	To close
A2	0,1	0,1	0,92	2,02	0,075	0,11
A2S	0,15	0,15	1	2,20	0,075	

Cycle time w/o resistant torque at 6 bar.
Dimensions in mm.

To calculate the consumption, multiply the above figures by the real working pressure.

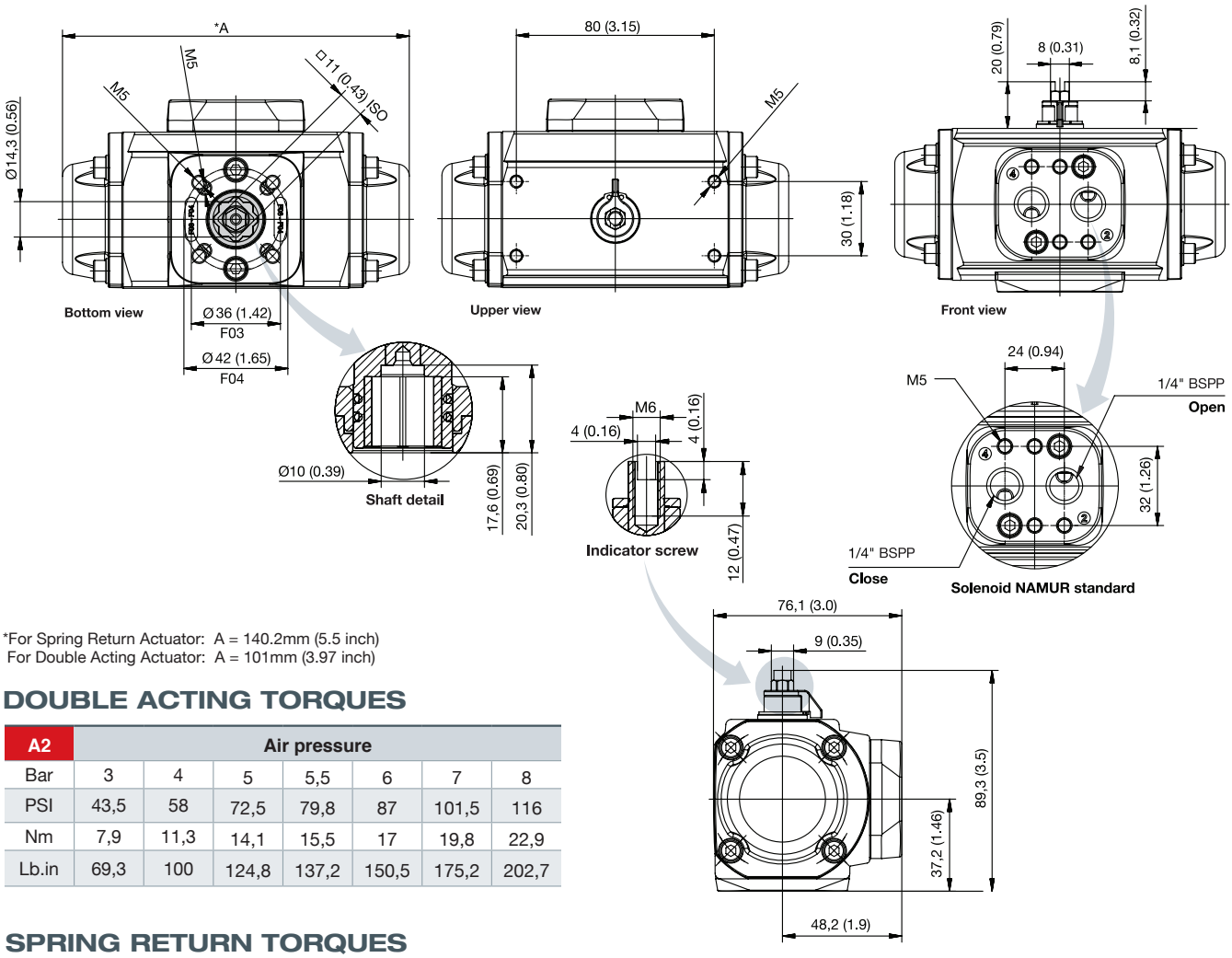

*For Spring Return Actuator: A = 140.2mm (5.5 inch)
For Double Acting Actuator: A = 101mm (3.97 inch)

DOUBLE ACTING TORQUES

A2	Air pressure						
Bar	3	4	5	5,5	6	7	8
PSI	43,5	58	72,5	79,8	87	101,5	116
Nm	7,9	11,3	14,1	15,5	17	19,8	22,9
Lb.in	69,3	100	124,8	137,2	150,5	175,2	202,7

SPRING RETURN TORQUES

A2S	Spring Torques		Air torque at indicated pressure														
			3		4		5		5,5		6		7		8		bar
			43,5		58		72,5		79,8		87		101,5		116		p.s.i
N	Initial	End	Initial	End	Initial	End	Initial	End	Initial	End	Initial	End	Initial	End	Initial	End	
6*	10	6,7					7,4	4,1	8,8	5,5	10,3	7	13,1	9,8	16,2	12,9	Nm
	88,5	59,3					65,5	36,3	77,9	48,7	91,2	62	115,9	86,7	143,4	114,2	Lb.in
5	8,5	5,8			5,5	2,8	8,3	5,6	9,7	7	11,2	8,5	14	11,3	17,1	14,4	Nm
	75,2	51,3			48,7	24,8	73,5	49,6	85,9	62	99,1	75,2	123,9	100	151,3	127,5	Lb.in
4	7	4,6	3,3	0,9	6,7	4,3	9,5	7,1	10,9	8,5	12,4	10	15,2	12,8	18,3	15,9	Nm
	62	40,7	29,2	8	59,3	38,1	84,1	62,8	96,5	75,2	109,7	88,5	134,5	113,3	162	140,7	Lb.in
3	5,5	3,6	4,3	2,4	7,7	5,8	10,5	8,6	11,9	10	13,4	11,5	16,2	14,3			Nm
	48,7	31,9	38,1	21,2	68,2	51,3	92,9	76,1	105,3	88,5	118,6	101,8	143,4	126,6			Lb.in
2	4	2,4	5,5	3,9	8,9	7,3	11,7	10,1	13,1	11,5	14,6	13					Nm
	35,4	21,2	48,7	34,5	78,8	64,6	103,6	89,4	115,9	101,8	129,2	115,1					Lb.in

N: Number of springs per side

* Standard number of springs

ALUMINUM PNEUMATIC ACTUATOR - TECHNICAL DATA

A3: DOUBLE ACTING | **A3S:** SPRING RETURN

DISASSEMBLY

No.	Description	Qty	Material
1	Cap allen screw	8	AISI-304 stainless steel
2	Cap	2	Aluminum alloy (2) + (6)
3	Cap-O-ring	2	N.B.R.
4	Piston	2	Aluminum alloy (2)
5	Cylinder	1	Aluminum alloy (2) + (1)
6	Washer	1	Polyamide 6
7	Spring clip	1	Steel (3)
8	Position indicator	1	Polyamide
9	Piston guide	2	Polyacetal
10	Guide ring	2	Polyacetal
11	Piston O-ring	2	N.B.R.
12	Shaft O-ring	2	N.B.R.
13	Shaft O-ring	2	N.B.R.
14	Preloaded springs	12	DIN-17223-c (5) (4)
15	Base plate (iso-5211)	1	Polyamide + FG
16	Shaft	1	Steel (2)
17	Cam	1	Steel (2)
18	Cap washer	8	AISI-304 stainless steel
19	Allen screw	2	AISI-304 stainless steel
20	Nut	4	AISI-304 stainless steel
21	Plate O-ring	2	N.B.R
22	Nut	4	AISI-304 stainless steel
23	Pneumatic connection plate	1	Polyamide + FG
24	Plate allen screw	2	AISI-304 stainless steel
25	Exagonal screw	2	AISI-304 stainless steel
26	Nut	2	AISI-304 stainless steel
27	Bushing	2	AISI-303 stainless steel
28	O-ring	2	N.B.R

1. Covered with polyamide.
2. Covered by cataphoresis.
3. Covered by nickel - PTFE.
4. Variable quantity, please see the Spring return torque chart.
5. Trivalent chromium passivation.
6. Covered with polyurethane.

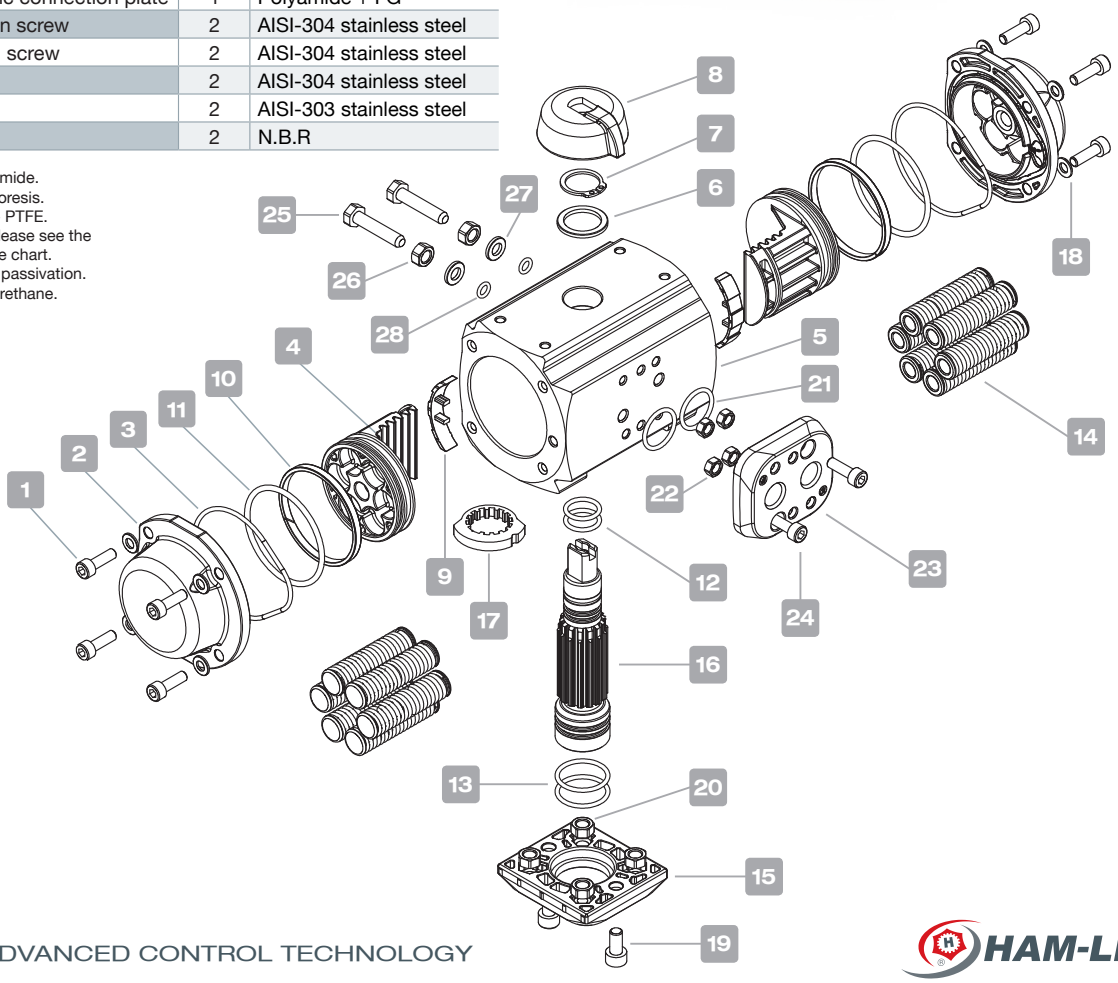

Model	Cycle time in (sec)		Weight		Capacity in litres	
	To open	To close	Kg.	Lb.	To open	To close
A3	0,15	0,15	1.40	3.09	0,15	0,18
A3S	0,2	0,2	1.625	3.58	0,15	

Cycle time w/o resistant torque at 6 bar.
Dimensions in mm.

To calculate the consumption, multiply the above figures by the real working pressure.

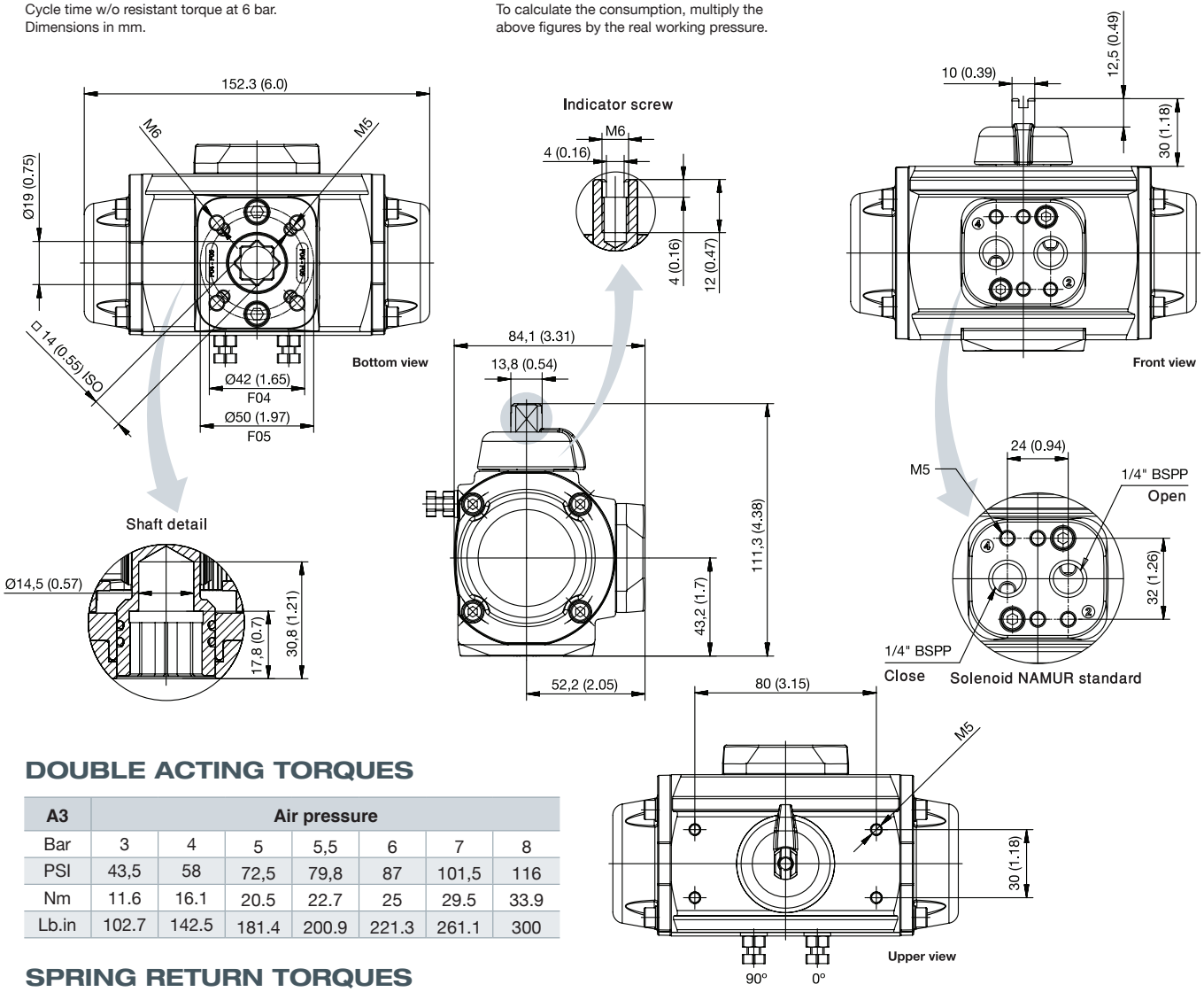

DOUBLE ACTING TORQUES

A3	Air pressure						
Bar	3	4	5	5,5	6	7	8
PSI	43,5	58	72,5	79,8	87	101,5	116
Nm	11.6	16.1	20.5	22.7	25	29.5	33.9
Lb.in	102.7	142.5	181.4	200.9	221.3	261.1	300

SPRING RETURN TORQUES

A3S	Spring Torques		Air torque at indicated pressure														
			3		4		5		5,5		6		7		8		bar
			43,5		58		72,5		79,8		87		101,5		116		p.s.i
N	Initial	End	Initial	End	Initial	End	Initial	End	Initial	End	Initial	End	Initial	End	Initial	End	
6*	16,5	11,1					9,4	4	11,6	6,2	13,9	8,5	18,4	13	22,8	17,4	17,4Nm
	146	98,2					83,2	35,4	102,7	54,9	123	75,2	162,9	115,1	201,8	154	Lb.in
5	13,8	9,4			6,7	2,3	11,1	6,7	13,3	8,9	15,6	11,2	20,1	15,7	24,5	20,1	Nm
	122,1	83,2			59,3	20,4	98,2	59,3	117,7	78,8	138,1	99,1	177,9	139	216,8	177,9	Lb.in
4	11,1	7,6			8,5	5	12,9	9,4	15,1	11,6	17,4	13,9	21,9	18,4	26,3	22,8	Nm
	98,2	67,3			75,2	44,3	114,2	83,2	133,6	102,7	154	123	177,9	162,9	232,8	201,8	Lb.in
3	8,5	5,8	5,8	3,1	10,3	7,6	14,7	12	16,9	14,2	19,2	16,5	23,7	21			Nm
	75,2	51,3	51,3	27,4	91,2	67,3	130,1	106,2	149,6	125,7	169,9	146	209,8	185,9			Lb.in
2	5,8	3,6	8	5,8	12,5	10,3	16,9	14,7	19,1	16,9	21,4	19,2					Nm
	51,3	31,9	70,8	51,3	110,6	91,2	149,6	130,1	169	149,6	189,4	169,9					Lb.in

N: Number of springs per side

* Standard number of springs

A4: DOUBLE ACTING

A4S: SPRING RETURN

DISASSEMBLY

No.	Description	Qty	Material
1	Cap allen screw	8	AISI-304 stainless steel
2	Cap	2	Aluminum alloy (2) + (6)
3	Cap-O-ring	2	N.B.R.
4	Piston	2	Aluminum alloy (2)
5	Cylinder	1	Aluminum alloy (2) + (1)
6	Washer	1	Polyamide 6
7	Spring clip	1	Steel (3)
8	Position indicator	1	Polyamide
9	Piston guide	2	Polyacetal
10	Guide ring	2	Polyacetal
11	Piston O-ring	2	N.B.R.
12	Shaft O-ring	2	N.B.R.
13	Shaft O-ring	2	N.B.R.
14	Preloaded springs	12	DIN-17223-c (5) (4)
15	Cam	1	Steel (2)
16	Shaft	1	Steel (2)
17	Plate O-ring	2	N.B.R.
18	Cap washer	8	AISI-304 stainless steel
19	Nut	4	AISI-304 stainless steel
20	Pneumatic connection plate	1	Polyamide + FG
21	Plate allen screw	2	AISI-304 stainless steel
22	Exagonal Screw	2	AISI-304 stainless steel
23	Nut	2	AISI-304 stainless steel
24	Bushing	2	AISI-304 stainless steel
25	O-ring	2	N.B.R.

1. Covered with polyamide.
2. Covered by cataphoresis.
3. Covered by nickel - PTFE
4. Variable quantity, please see the Spring return torque chart.
5. Trivalent chromium passivation.
6. Covered with polyurethane.

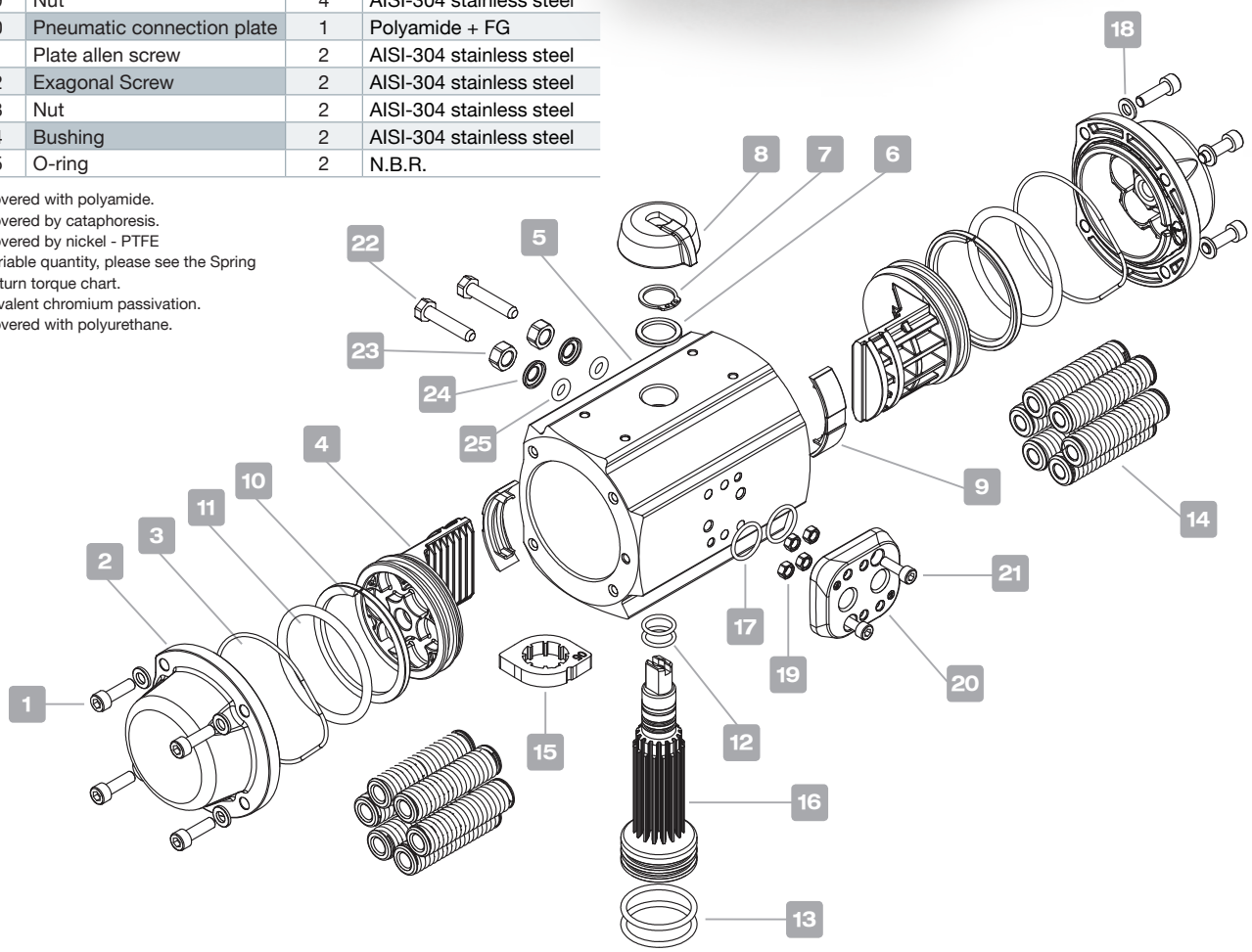

Model	Cycle time in (sec)		Weight		Capacity in litres	
	To open	To close	Kg.	Lb.	To open	To close
A4	0.2	0,2	2.57	5.67	0,28	0.37
A4S	0,25	0,25	2.94	6.49	0,28	

Cycle time w/o resistant torque at 6 bar.
Dimensions in mm.

To calculate the consumption, multiply the above figures by the real working pressure.

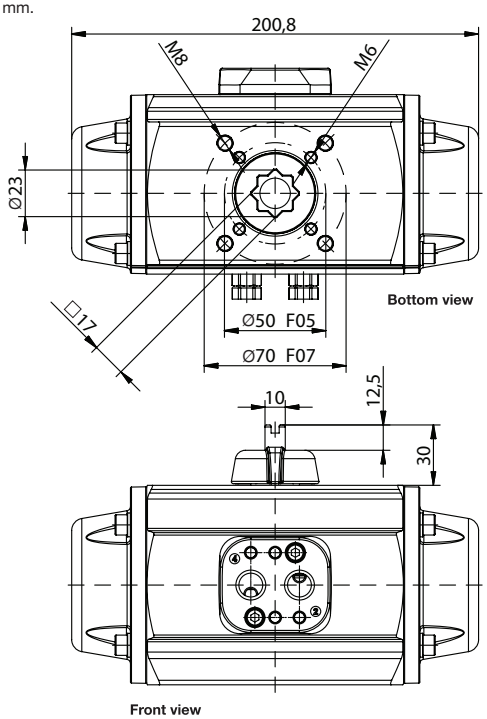

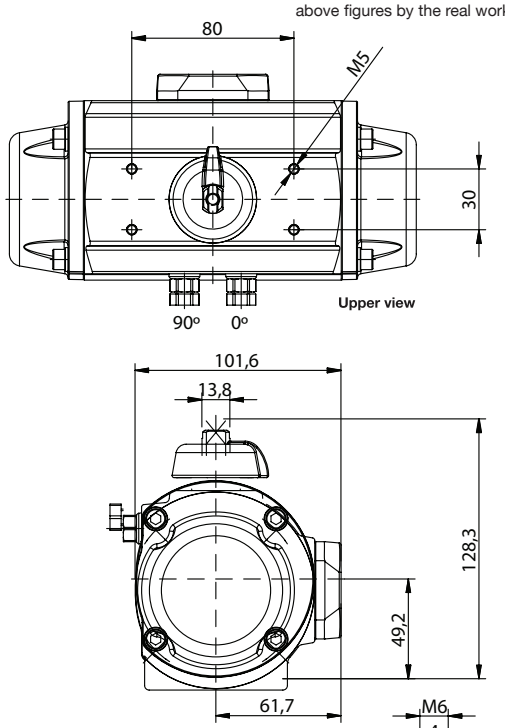

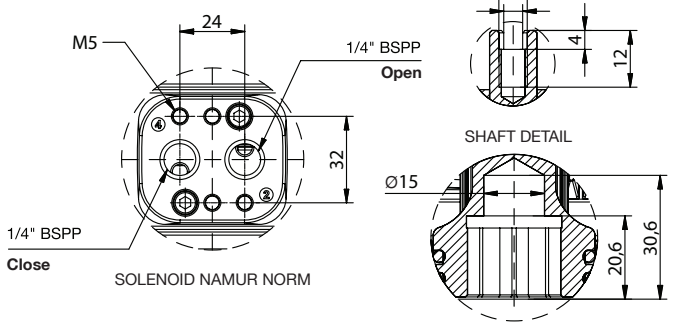

DOUBLE ACTING TORQUES

A4	Air pressure						
Bar	3	4	5	5,5	6	7	8
PSI	43,5	58	72,5	79,8	87	101,5	116
Nm	23.5	32.3	41.0	45.3	49.7	58.4	67.1
Lb.in	280	286	363	401	440	517	594

SPRING RETURN TORQUES

A4S	Spring Torques		Air torque at indicated pressure														
			3		4		5		5,5		6		7		8		bar
			43,5		58		72,5		79,8		87		101,5		116		p.s.i
N	Initial	End	Initial	End	Initial	End	Initial	End	Initial	19,4	Initial	End	Initial	End	Initial	End	
6*	31.4	20.9					20.1	9.6	24.4	13.9	28.8	18.3	37.5	27.0	46.2	35.7	Nm
	277.9	185					177.9	85.0	216	123	254.9	162	331.9	239	408.9	316	Lb.in
5	27	17.4			14.9	5.3	23.6	14	27.9	18.36	32.3	22.7	41	31.4	49.7	41	Nm
	239	154			131.9	46.9	208.9	123.9	246.9	162	285.9	200.9	362.9	277.9	439.9	354.9	Lb.in
4	21.8	13.9	9.6	1.7	18.4	10.5	27.1	19.2	31.4	23.5	35.8	27.9	44.5	36.6	53.2	54.3	Nm
	192.9	123	85	15	162.9	92.9	239.9	169.9	277.9	208	316.9	246.9	393.9	323.9	470.9	400.9	Lb.in
3	18.3	11.3	12.2	5.2	21	14	29.7	22.7	34	27	38.4	31.4	47.1	40.1			Nm
	162	100	108	46	185.9	123.9	262.9	200.9	300.9	239	339.9	277.9	416.9	354.9			Lb.in
2	12.2	7.8	15.7	11.3	24.5	20.1	33.2	28.8	37.5	33.1	41.9	37.5					Nm
	108	69	139	100	216.8	177.9	293.8	254.9	331.9	293	370.8	331.9					Lb.in

N: Number of springs per side

* Standard number of springs

180° PNEUMATIC ACTUATOR - TECHNICAL DATA

DISASSEMBLY

No.	Description	Qty	Material
1	Cap screw	8	AISI-304 stainless steel
2	Duabel acting cap	2	Aluminium alloy (2) + (4)
3	Cap O-ring	2	N.B.R.
4	Piston	2	Aluminium alloy (2)
5	Cylinder	1	Aluminium alloy (2) + (1)
6	Washer	1	Polyamide 6
7	Spring clip	1	Stainless Steel (3)
8	Position indicator	1	Polyacetal
9	Piston guide	2	Polyacetal
10	Guide ring	2	Polyacetal + Mb
11	Piston O-ring	2	N.B.R.
12	Shaft O-ring	2	N.B.R.
13	Shaft O-ring	2	N.B.R.
14	Springs set	2	DIN-17223-c (2) (3)
15	Base plate (ISO-5211)	1	Polyamide + FG
16	Shaft	1	Polyamide + S.S. Insert
17	Drive adapter	1	AISI-316 stainless steel
18	Cap washer	8	AISI-304 stainless steel
19	Allen screw	2	AISI-304 stainless steel
20	Nut	4	AISI-304 stainless steel
21	Nut	4	AISI-304 stainless steel
22	Pneumatic connection plate	1	Polyamide + FG
23	Plate allen screw	2	AISI-304 stainless steel
24	Plate O-ring	2	N.B.R
25	Spring return cap	2	Aluminium alloy (2) + (4)

A2T: DOUBLE ACTING

A2ST: SPRING RETURN

(1) Covered with polyamide.
(2) Covered by Cataphoresis.
(3) Variable quantity, please see the Spring return torque chart.
(4) Covered with polyurethane.

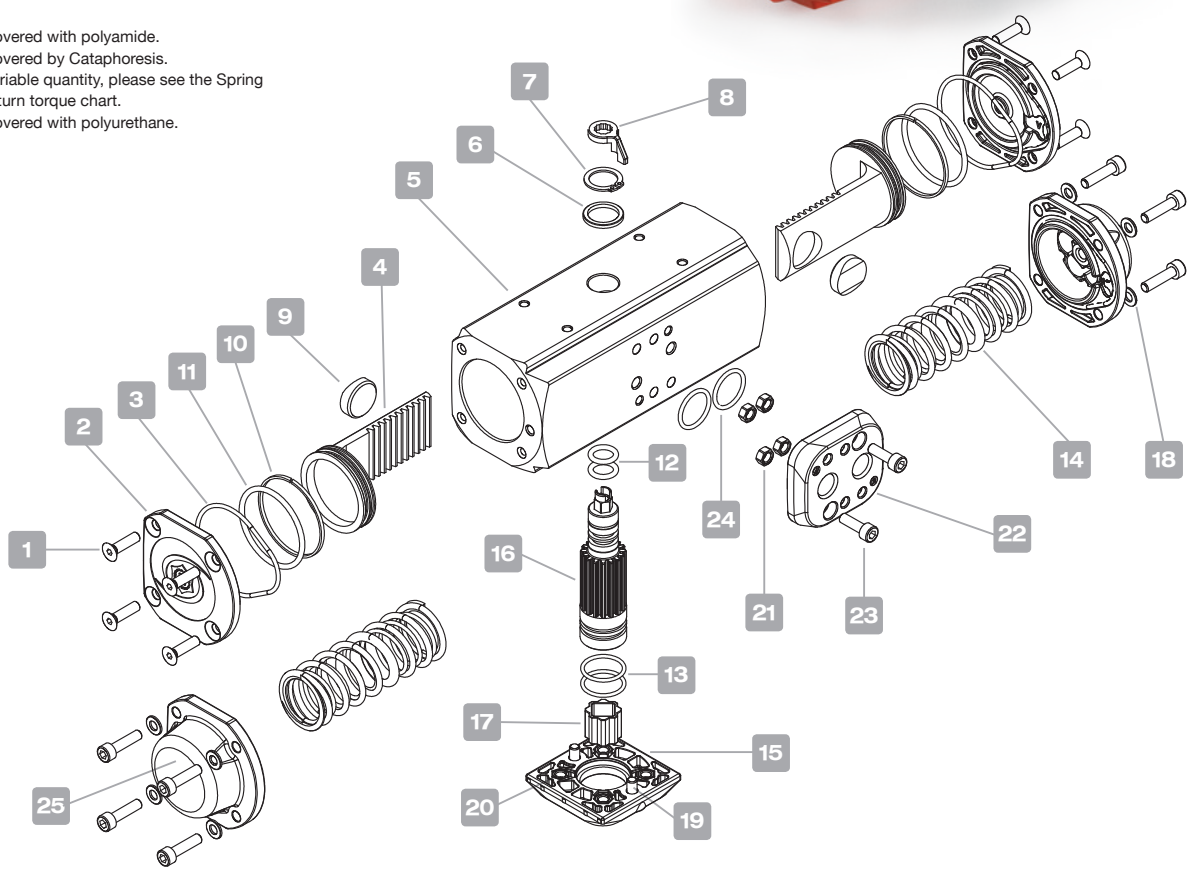

Model	Cycle time in (sec)		Weight		Capacity in litres	
	To open	To close	Kg.	Lb.	To open	To close
A2T	0.13	0.13	1.3	2.76	0.123	0.158
A2ST	0.20	0.20	1.5	3.31	0.123	

Cycle time w/o resistant torque at 6 bar.
Dimensions in mm.

To calculate the consumption, multiply the above figures by the real working pressure.

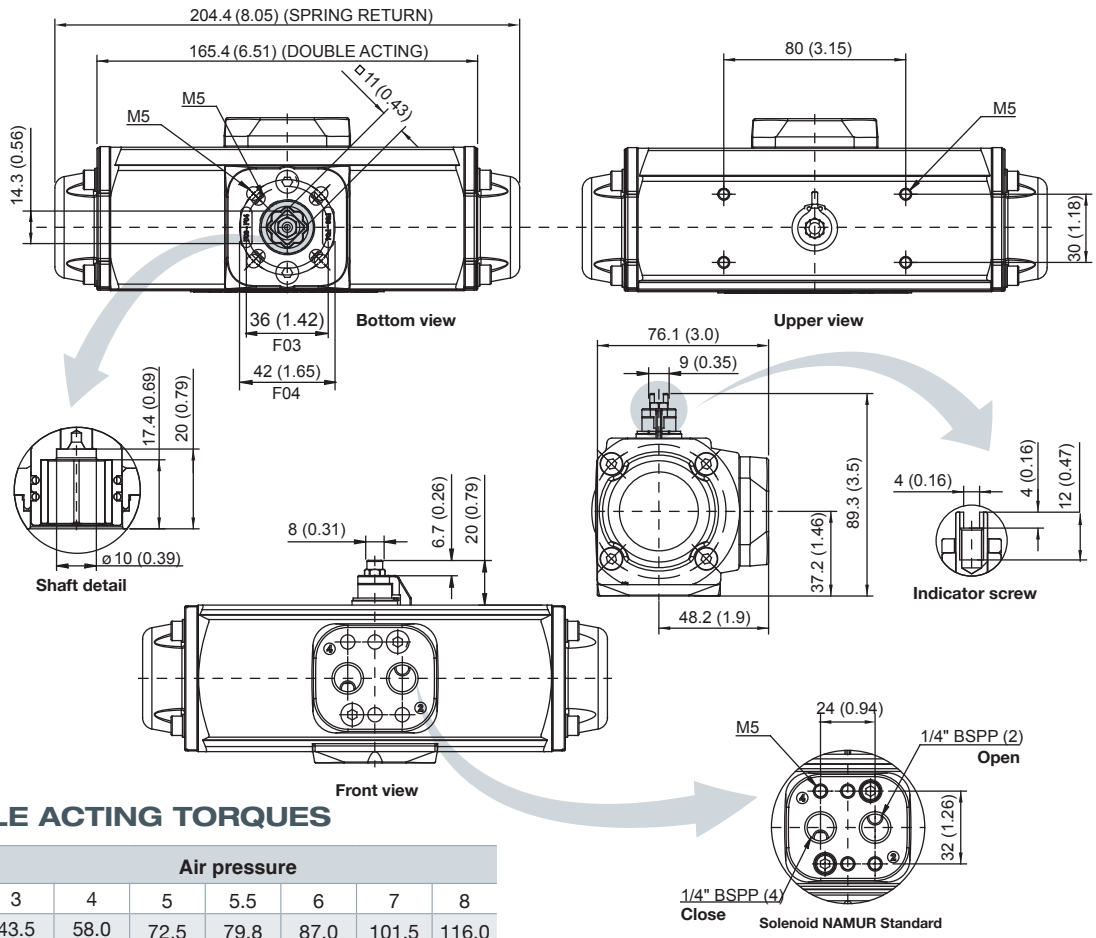

DOUBLE ACTING TORQUES

A2T	Air pressure						
Bar	3	4	5	5.5	6	7	8
PSI	43.5	58.0	72.5	79.8	87.0	101.5	116.0
Nm	7.9	11.3	14.1	15.5	17.0	19.8	22.9
Lb.in	69.9	100	124.8	137.2	150.5	175.2	202.7

SPRING RETURN TORQUES

A2ST	Spring Torques		Air torque at indicated pressure														
			3		4		5		5.5		6		7		8		bar
			43.5		58		72.5		79.8		87		101.5		116		p.s.i
N	Initial	End	Initial	End	Initial	End	Initial	End	Initial	End	Initial	End	Initial	End	Initial	End	
4*	9.7	6.1					8	4.4	9.4	5.8	10.9	7.3	13.7	10.1	16.8	13.2	Nm
	86.1	53.8					71	38.7	83.4	51.1	96.6	64.3	121.4	89.1	148.9	116.6	Lb.in
3	8.8	5.5			5.8	2.5	8.6	5.3	10	6.7	11.5	8.2	14.3	11	17.4	14.1	Nm
	78.1	48.4			51.6	21.9	76.4	46.7	88.8	59.1	102	72.4	126.8	97.2	154.3	124.6	Lb.in
2	6.7	4.3	3.6	1.2	7	4.6	9.8	7.4	11.2	8.8	12.7	10.3	15.5	13.1			Nm
	59	37.7	32.2	10.7	62.3	40.8	87.1	65.6	99.5	78	112.8	91.3	137.5	116			Lb.in
1	4.3	2.4	5.5	3.6	8.9	7	11.7	9.8	13.1	11.2	14.6	12.7					Nm
	37.7	21.5	48.4	32.2	78.5	62.3	103.3	87.1	115.7	99.5	129	112.8					Lb.in

N: Number of springs per side

* Standard number of springs

ACCESSORIES KITS

Standard 90 degrees. Aluminum pneumatic actuator, Operating Pressure: max. 8 bar (116 PSI). Standard working temperature -32°C to 90°C (-25.6°F to 194°F)

Inductive limit switch for visual and electric indication of actuator position voltage: 8V DC, Enclosure IP67

Solenoid valve, attached to the actuator to create an electro pneumatically actuated ball valve. DC 24V, 2.5W 4/2 Way for double acting and spring return. Enclosure IP65
Option for: 110VAC, 50HZ.
Option for: 3/2, 5/2 Way.

For more information please contact your local representative.

Electric actuator has been designed to control valve with 90 deg rotation 15W, IP66.
Option 1: 90-240V, 50/60HZ, 90-350V DC,
Option 2: 15-30V, 50/60HZ, 12-48V DC

ATEX mechanical limit switch for use in hazardous locations zone 2, temp range (-20°C to 60°C) (-4°F to 140°F)

Electro Mechanical limit switch for visual and electric indication of actuator position. Enclosure IP67,
voltage: AC: 250V 16A, 125V 16A
DC: 250V 0.3A, 125V 0.6A, 30V 10V

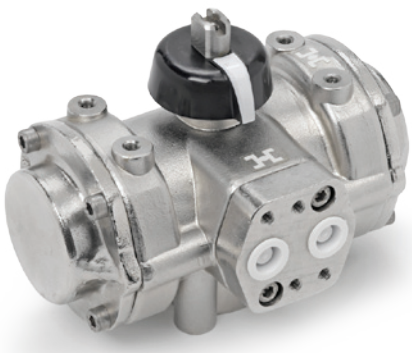

90 degree Stainless Steel pneumatic actuator, operating pressure max. 8 bar (116 PSI). Standard working temperature -32°C to 90°C (-25.6°F to 194°F)

Ordering information for Factory Assembled Accessories

Valve Type - A1 HT LS SV

Actuator Type	
Per Tables (1,2,3)	Aluminum Actuator
6S1	St.St. Actuator*
E1 E1D	Electric Actuator*

* Please contact your Local Representative to fit Actuator to Valve.

Temp Range °C (°F)	
Blank	Standatd Actuator
HT	High Temperature Actuator
LT	Low Temperature Actuator

Limit Switch Type	
Blank	No Limit Switch
LSM	Electromechanical Limit Swith
LSI	Inductive Limit Switch
LSMAX	Electromechanical Limit Switch ATEX
LSIAX	Inductive Limit Switch ATEX

Solenoid Valve	
Blank	No Solenoid Valve
SVA SVD	Solenoid Valve (AC/DC)

Mounting Kits for field assembly of Limit Switches:

Actuator Type	Mounting Kit Description
A1 /A1S	Z-LS-MK-A1
A2 /A2S	Z-LS-MK-A2
A3 /A3S	Z-LS-MK-A3

- If special cleaning is required, LF / OC will be added in the end, and will refer to the Valve Only.
  For example: **H - 800S-SS - L- 1/4 - A1LSM - OC**
- In case of request for Actuated valve with LS and Solenoid Valve, The order is as follows: Valve, Actuator, LS, Solenoid
  For example: **H - 800S-SS - L- 1/4 - A1LSMSV**
- For double mounting actuators, please contact your local representative.

Ordering Information for Accessories Kits for field assembly

Aluminum actuators for filed assembly	Electro Mechnical Limit Switch	Inductive Limit Switch	Electro Mechnical / Inductive Limit Switch ATEX	Stainless Steel Actuator*	Electric Actuator*	Solenoid Valve 4/2 Way Option: 5/2, 3/2 Way
See Tables (1,2,3)	**Z - LSM**	**Z - LSI**	**Z - LSMAX Z - LSIAX**	**Z - 6S1**	**Z - E1A (AC) Z-E1D (DC)**	**Z - SVA (AC) Z - SVD (DC)**

* For Stainless Steel Actuator or Electric Actuator Please contact your local representative.

Warning! For your safety

The system designer and user have the sole responsibility for selecting products suitable for their special application requirements, ensuring their safe and trouble-free installation, operation, and maintenance. Application details, material compatibility and product ratings should all be considered for each selected product. Improper selection, installation or use of products can cause property damage or personal injury.

Ham-Let HPA catalog Rev_04 July 2011

HAM-LET ASTAVA

LINE OF MANIFOLDS

2|3|5

WAY MANIFOLD

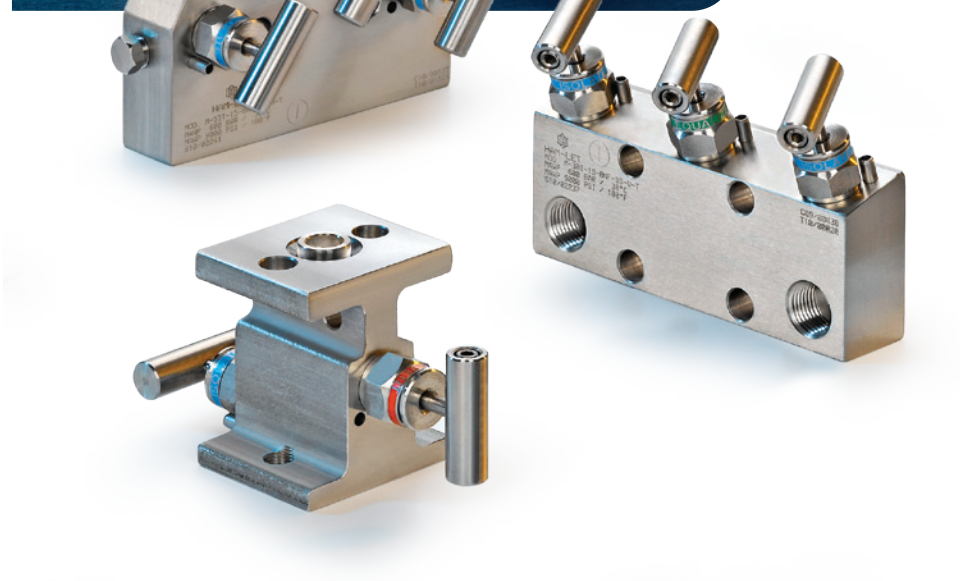

HAM-LET®
ADVANCED CONTROL TECHNOLOGY

FEATURES

- All 316 stainless steel construction with packing or O-ring concept.
- Direct mount flange design per IEC 61518-A.
- NACE MR-01-075 as standard.
- Working pressure range up to 10,000 psig as an option.
- Temperature range up to 550°C (1022°F) with Grafoil® packing.
- Blowout-proof stem.
- Safety back seat stem-tip.
- Safety stop pin.
- Stem seals below stem threads.
- Stem material 316 TI with chromium carbide diffusion coating.
- A choice of O-ring materials.
- Full traceability of all construction materials.

GENERAL

The HAM-LET ASTAVA Line of Instrument Manifolds consists of a full range of 2, 3 and 5-way instrument manifolds, which are fully compatible with the requirements of the Oil, Gas and Petro-chemical industries, and meet the requirements of most pressure, differential level and flow applications.

PRESSURE AND TEMPERATURE RATING

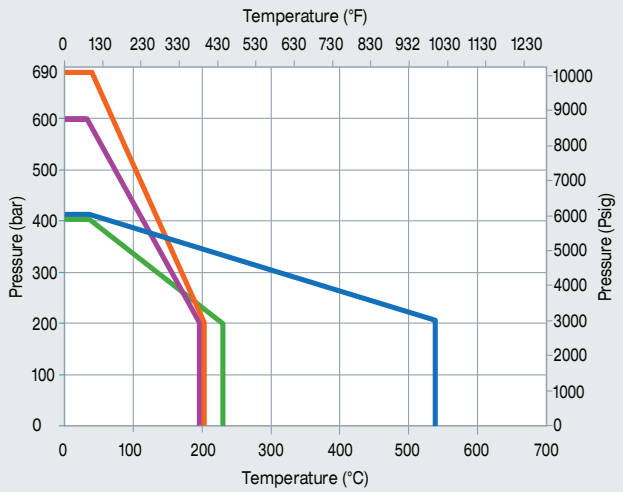

Packing Material	Grafoil®	Down to -50°C (-58°F)
	PTFE	Down to -50°C (-58°F)
O-Ring Material	Viton®	Down to -20°C (-4°F)
	NBR	Down to -34°C (-29°F)
	Perfluor	Down to -40°C (-40°F)
	EPDM	Down to -45°C (-49°F)
	10,000 psi (690 bar)	Available upon request

THE VALVE BONNETS HAVE COLOR CODED RING LABELS FOR SERVICE IDENTIFICATION:

Red:
Vent Valves

Blue:
Isolate Valves

Green:
Equalize Valves

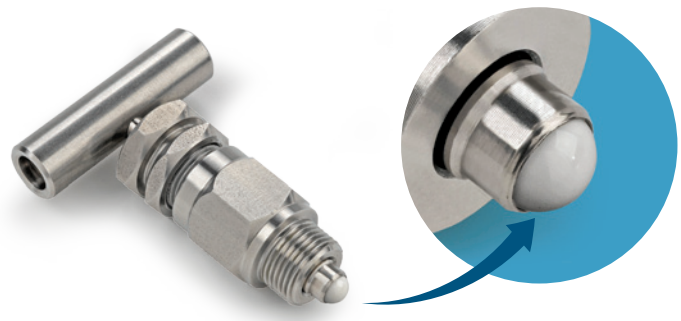

CERAMIC STEM BALL TIP AL2O3 :
Superior hardness prevents deformation of the sealing tip and wear, significantly increasing the life time of the product for isolation purposes.

Handle Options

The standard handle of the HAM-LET ASTAVA Line of Instrument Manifolds is a stainless steel T-bar. For high pressure applications of 10,000 psi (690 bar) an extended T-bar or hand wheel can be applied. Anti-tamper bonnet and key lock options assure that the manifold is operated by qualified personnel only.

CLEANING

All HAM-LET instrument manifolds are cleaned in accordance with ASTAVA cleaning procedure WIQ-016 Oxygen clean is available in accordance with ASTM G-93.

TESTING

All HAM-LET instrument manifolds are factory tested with Nitrogen at 800 psig (55 bar) based on MSS-99. Seats have a maximum allowable leak rate of 0.1 std cm3 /min.
Hydrostatic and Helium leak test is available upon request.

MATERIAL OF CONSTRUCTION

Packing Bonnet

O-ring Bonnet

Metal-to-Metal Bonnet

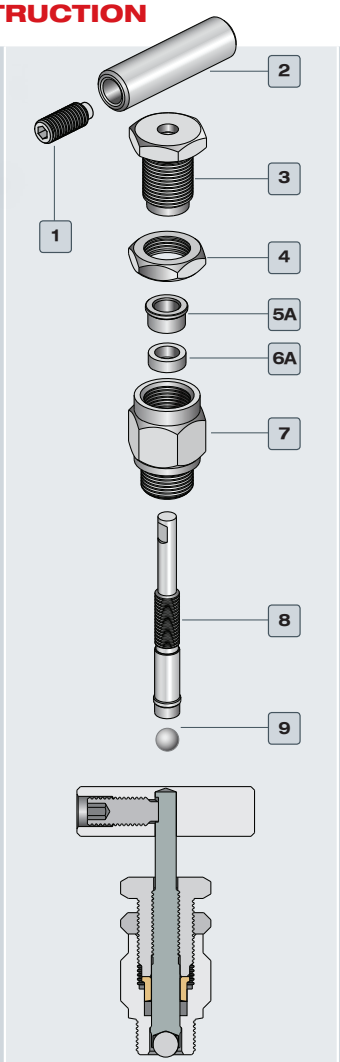

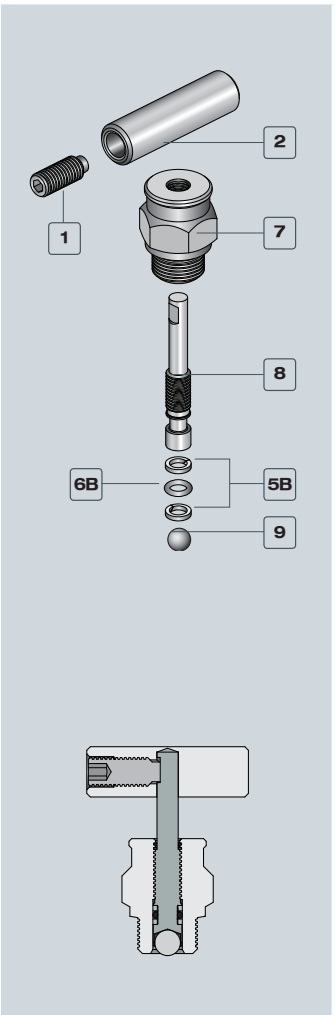

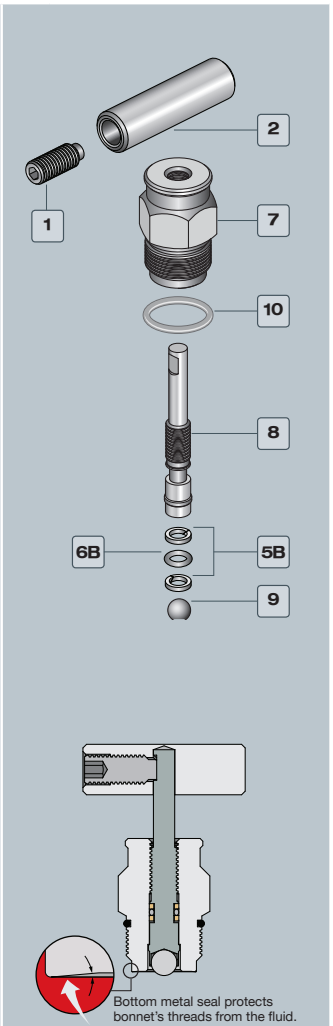

		Packing Bonnet		O-ring Bonnet		Metal-to-Metal Bonnet	
No	Part	Qty.	Material	Qty.	Material	Qty.	Material
1	Set Screw	1	St.St. 304	1	St.St. 304	1	St.St. 304
2	Bar Handle	1	St.St. 316L	1	St.St. 316L	1	St.St. 316L
3	Gland	1	St.St. 316L	-	-	-	-
4	Locking Nut	1	St.St. 316L	-	-	-	-
5A	Pressure ring	1	St.St. 316L	-	-	-	-
5B	Back-up ring	-	-	2	Virgin PTFE	2	Virgin PTFE
6A	Stem Packing	1	Virgin PTFE	-	-	-	-
6B	Stem O-ring	-	-	1	Viton® (Fluorocarbon FKM)	1	Viton® (Fluorocarbon FKM)
7	Bonnet	1	St.St. 316L	1	St.St. 316L	1	St.St. 316L
8	Stem	1	St.St. 316Ti Chrome-Carbide diffusion coated	1	St.St. 316Ti Chrome-Carbide diffusion coated	1	St.St. 316Ti Chrome-Carbide diffusion coated
9	Ball	1	Ceramic (AL2-O3)	1	Ceramic (AL2-O3)	1	Ceramic (AL2-O3)
10	Dust Protector	-	-	-	-	1	Viton® (Fluorocarbon FKM)

STANDARD CONFIGURATION DIMENSIONS
2 WAY DIRECT MOUNT

Instrument Mount Type	End Connection			Ham-Let Ordering Description	Dimensions											
					A		B		C		D		E		F	
	Process	Instrument	Vent / Bleed		mm	in	mm	in	mm	in	mm	in	mm	in	mm	in
Direct Mount	1/2" Female NPT	*Flange	1/4" Female NPT	M-20S-15-8NF-SS-V-T	85	3.35	x	x	65.0	2.56	182	7.17	32.0	1.26	5.0	0.20
	*Flange	*Flange	1/4" Female NPT	M-20H-90-FF-SS-V-T	153	6.02	x	x	56.0	2.20	78	3.07	65.0	2.56	20.0	0.79

* Flange Standard per IEC 61518-A

M-20S-15-8NF-SS-V-T

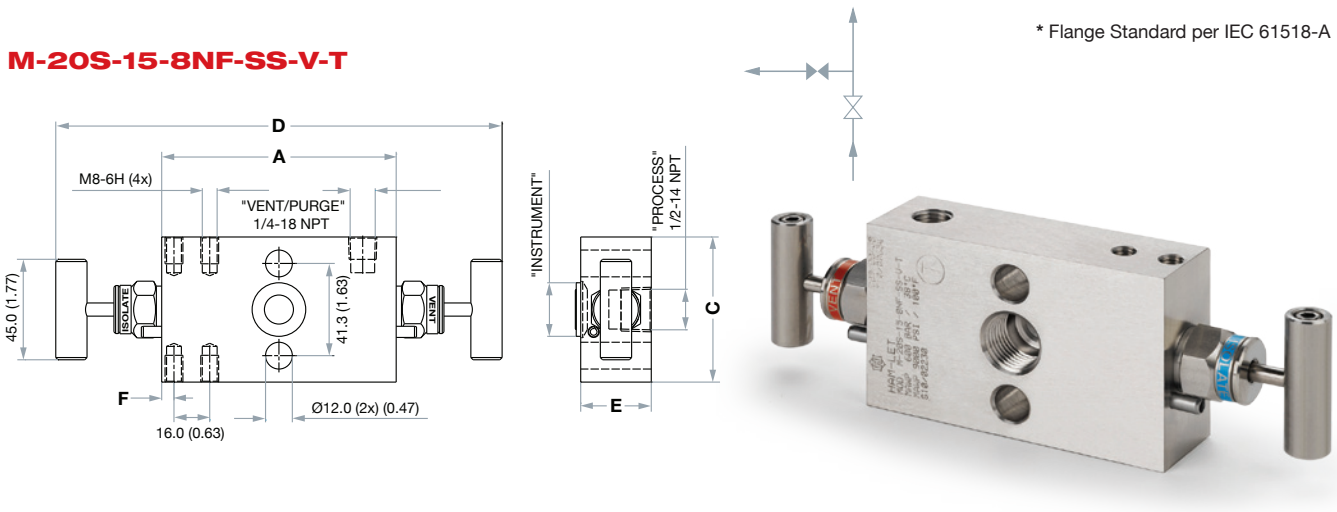

M-20H-90-FF-SS-V-T

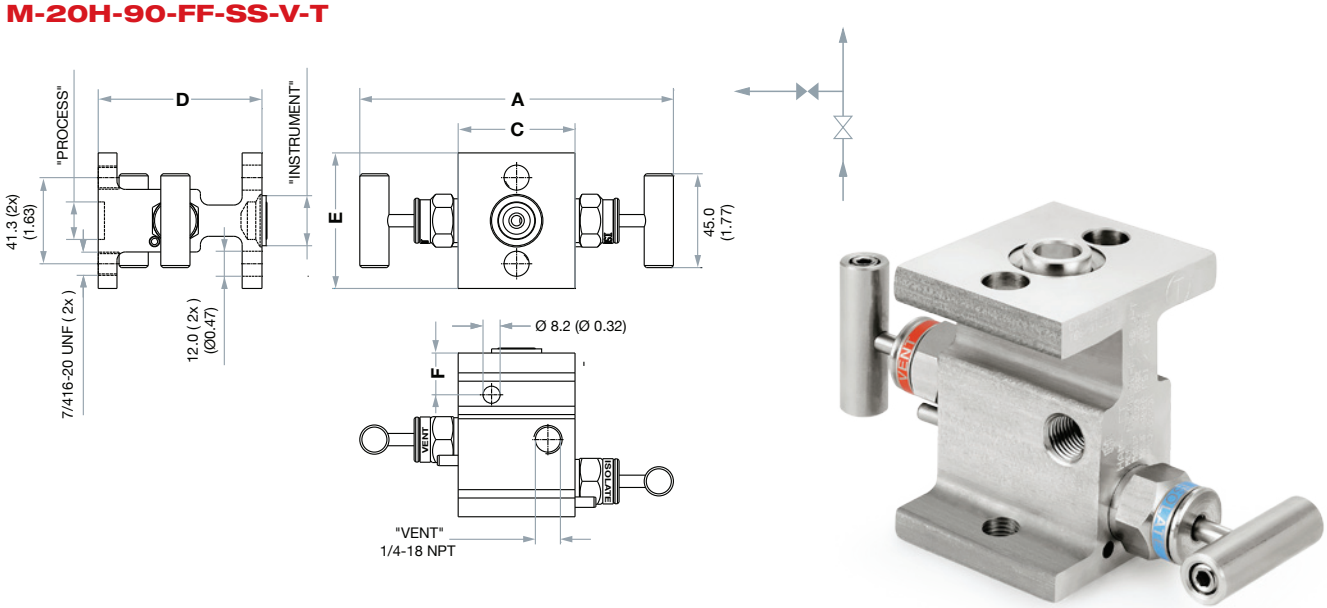

STANDARD CONFIGURATION DIMENSIONS
2 WAY REMOTE MOUNT

Instrument Mount Type	End Connection			Ham-Let Ordering Description	Dimensions											
					A		B		C		D		E		F	
	Process	Instrument	Vent / Bleed		mm	in	mm	in	mm	in	mm	in	mm	in	mm	in
Remote Mount	1/2” Female NPT	1/2” Female NPT	1/4” female NPT	M-20M-10-8N-SS-V-T	79	3.11	79.0	3.11	32.0	1.26	92.0	3.62	32	1.26	26	1.02
	1/2” Female NPT	1/2” Female NPT	1/4” female NPT	M-21A-10-8N-SS-V-T	107	4.21	79.4	3.13	65.0	2.56	65.0	2.56	32	1.26	35	1.38
	1/2” Female NPT	1/2” Female NPT	1/4” female NPT	M-21S-10-8N-SS-V-T	156	6.14	-	-	65.0	2.56	59.0	2.32	32	1.26	18	0.71

M-20M-10-8N-SS-V-T

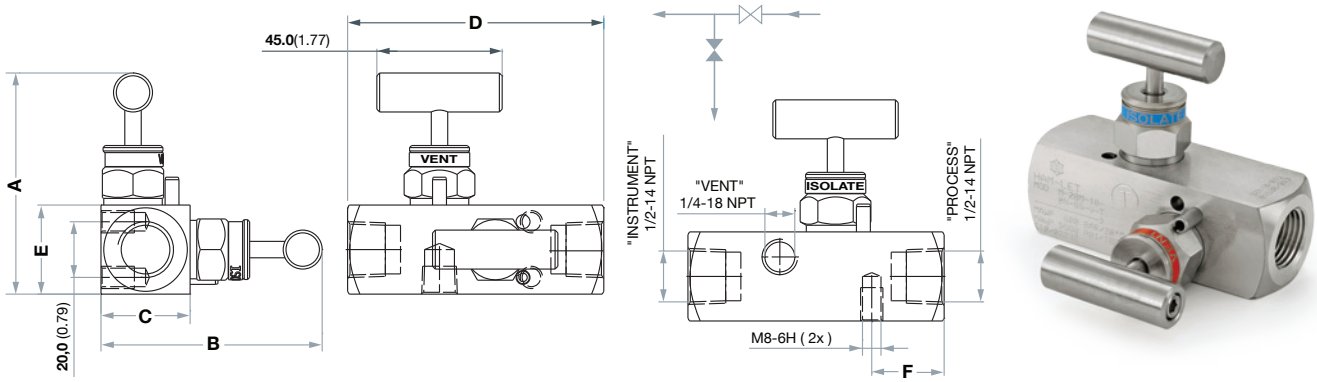

M-21A-10-8N-SS-V-T

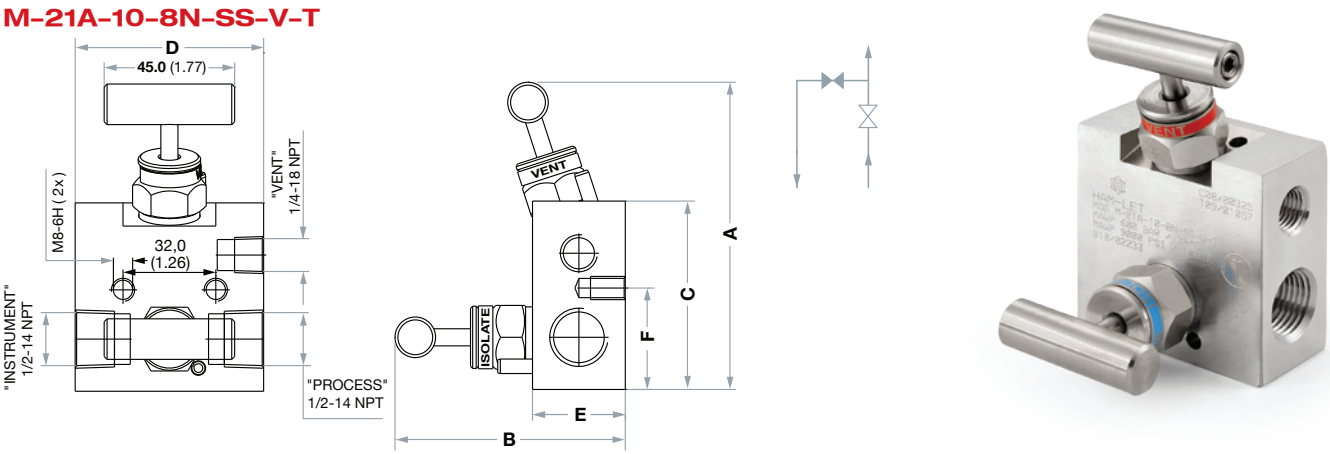

M-21S-10-8N-SS-V-T

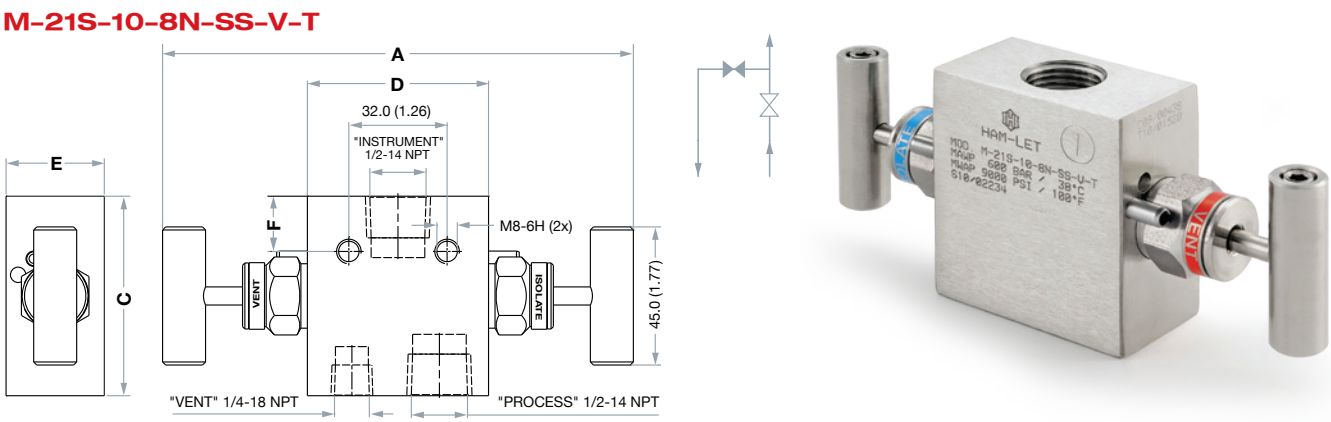

ORDERING INFORMATION FOR 2-WAY MANIFOLDS

M-2 1 A - 10 - 8 N - SS - T - LD - OC

Family

M-2	2 Way Manifold

Flow Scheme

0	(See table A)
1	

Valves Position

A	Angle Flat
S	Straight
M	Angle Square
H	H- Type

(See table A)

End Connection

00	Female integral Let-Lok
10	Female to Female
80	Male to Male
85	Male to Female
15	Female to Flange
90	Flange to Flange

Size

8	1/2”
4	1/4”
6	3/8”

Type End Connection

FF	Flange*
N	NPT
G	BSPP
R	BSPT
NF	NPT to Flange*
RF	BSPT to Flange*
GF	BSPP to Flange*
L	Female integral Let-Lok

* Flange Standard per IEC 61518-A

Body Material

SS	SS 316
M	Monel 400
D	Duplex 1.4462
HC	Alloy C-276
T	Titanium
SD	SuperDuplex

Packing

T	PTFE
G	Grafoil®
V	Viton®
EP	EPDM
BU	NBR
KL	Kalrez®

Handle

T	T bar
AT	Anti Tamper
LD	Locking device

Option

OC	Oxygen Clean
K	10,000 psi (690 bar)
V	Vent port 1/2”
B	Bleed valve
P	Blind plug

TABLE A: FLOW SCHEMATIC AND VALVE POSITION

Designator	Flow Schematic	Valves Position	Sketch
0	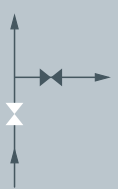	M	
		H	
		S	
1	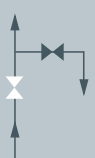	S	
		A	

Warning! For your safety
The system designer and user have the sole responsibility for selecting products suitable for their special application requirements, ensuring their safe and trouble-free installation, operation, and maintenance. Application details, material compatibility and product ratings should all be considered for each selected product. Improper selection, installation or use of products can cause property damage or personal injury.

STANDARD CONFIGURATION DIMENSIONS
3 WAY DIRECT MOUNT

Instrument Mount Type	End Connection			Ham-Let Ordering Description	Dimensions											
					A		B		C		D		E		F	
	Process	Instrument	Vent / Bleed		mm	in	mm	in	mm	in	mm	in	mm	in	mm	in
Direct mount	1/2" Female NPT	*Flange	-	M-30H-15-8NF-SS-V-T	181.0	7.13	95.0	3.74	86.0	3.39	79.0	3.11	66.0	2.60	20.0	0.79
	1/2" Female NPT	*Flange	-	M-30I-15-8NF-SS-V-T	161.0	6.34	107.0	4.21	65.0	2.56	150.0	5.91	32.0	1.26	16.0	0.63

* Flange Standard per IEC 61518-A

M-30H-15-8NF-SS-V-T

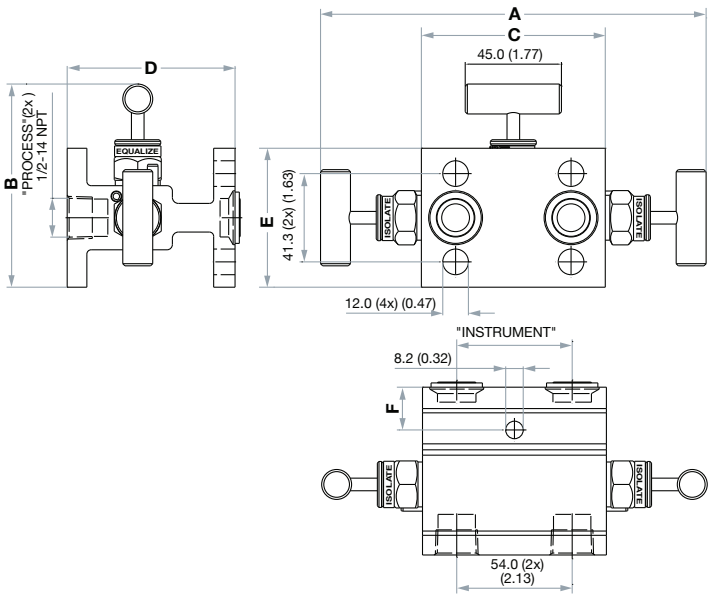

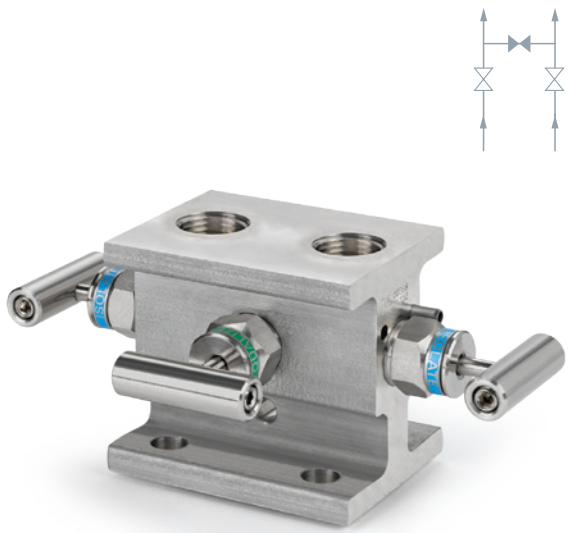

M-30I-15-8NF-SS-V-T

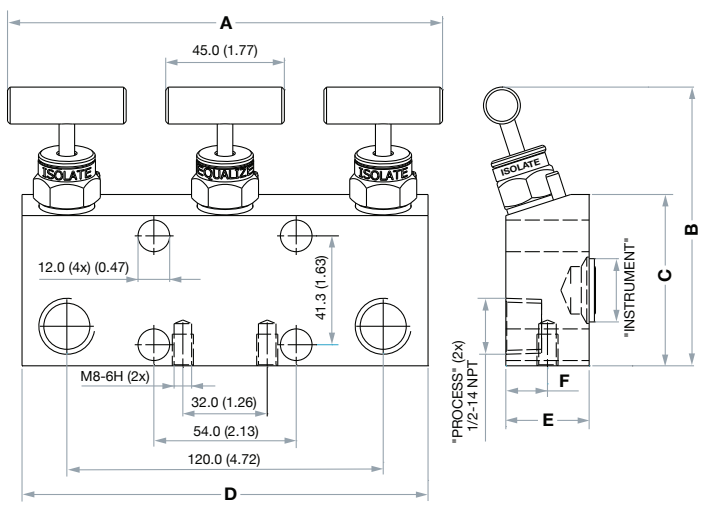

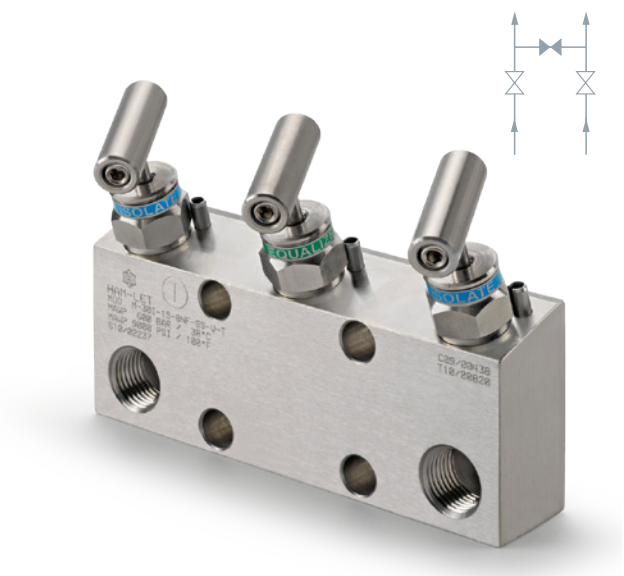

STANDARD CONFIGURATION DIMENSIONS
3 WAY DIRECT MOUNT

Instrument Mount Type	End Connection			Ham-Let Ordering Description	Dimensions											
					A		B		C		D		E		F	
	Process	Instrument	Vent / Bleed		mm	in	mm	in	mm	in	mm	in	mm	in	mm	in
Direct mount	1/2" Female NPT	*Flange	-	M-30A-15-8NF-SS-V-T	210.0	8.27	106.0	4.17	65.0	2.56	115.0	4.53	32.0	1.26	16.0	0.63
	*Flange	*Flange	-	M-30H-90-FF-SS-V-T	181.0	7.13	95.0	3.74	86.0	3.39	79.0	3.11	66.0	2.60	-	-

* Flange Standard per IEC 61518-A

M-30A-15-8NF-SS-V-T

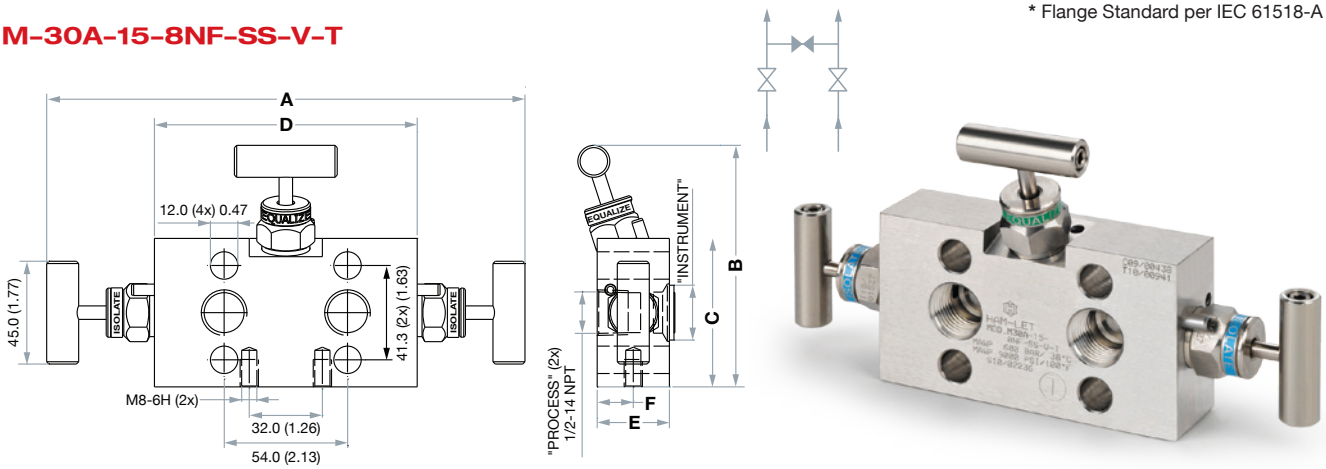

M-30H-90-FF-SS-V-T

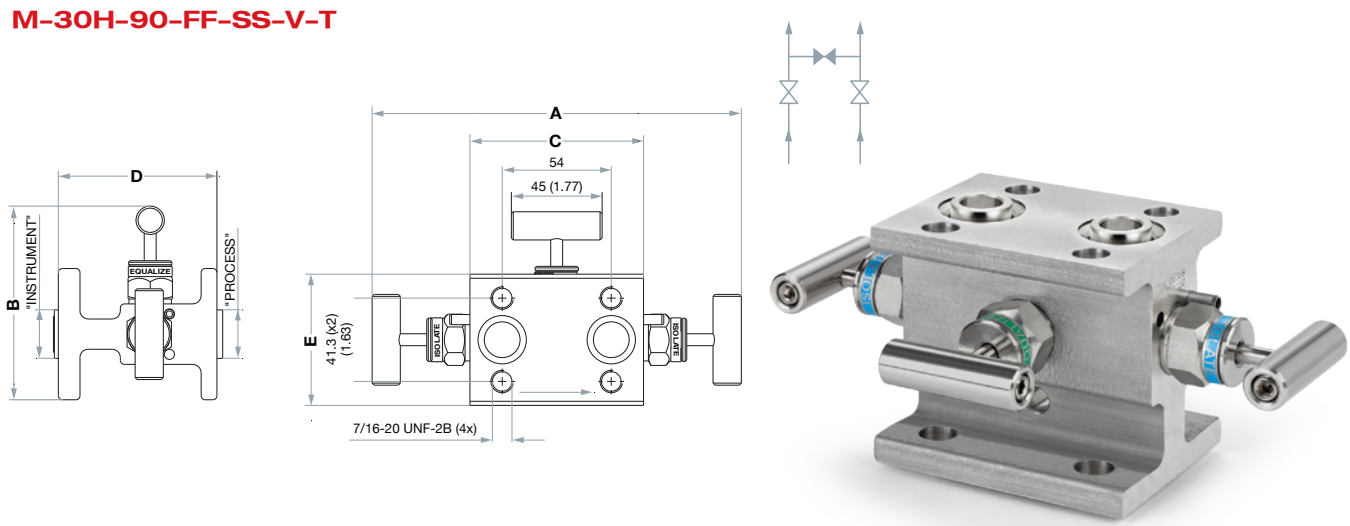

STANDARD CONFIGURATION DIMENSIONS
3 WAY REMOTE MOUNT

Instrument Mount Type	End Connection			Ham-Let Ordering Description	Dimensions											
					A		B		C		D		E		F	
	Process	Instrument	Vent / Bleed		mm	in	mm	in	mm	in	mm	in	mm	in	mm	in
Remote mount	1/2" Female NPT	1/2" Female NPT	-	M30S-10-8N-SS-V-T	185.0	7.28	79.0	3.11	65.0	2.56	90.0	3.54	32.0	1.26	17.0	0.67
	1/2" Male NPT	1/2"Female NPT	1/4" Female NPT	M32M-85-8N-SS-V-T	135.0	5.31	87.0	3.43	40.0	1.57	112.0	4.41	40.0	1.57	-	-

M-30S-10-8N-SS-V-T

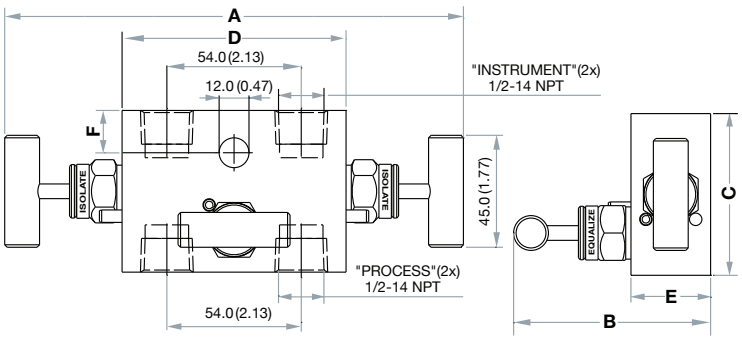

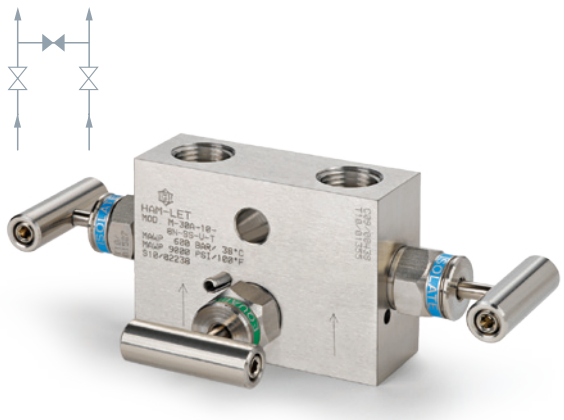

M-32M-85-8N-SS-V-T

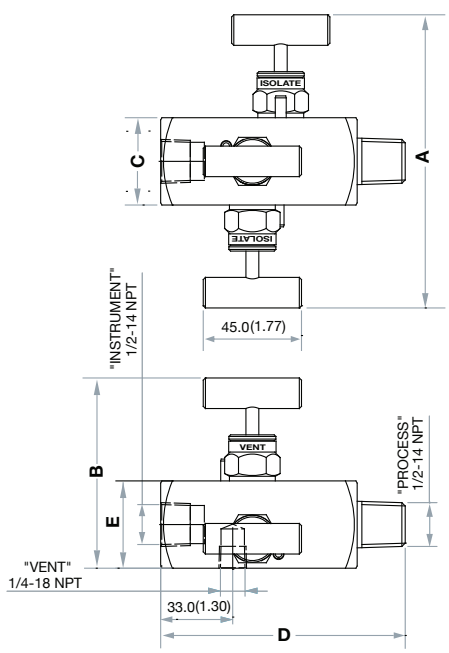

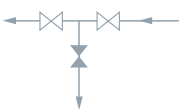

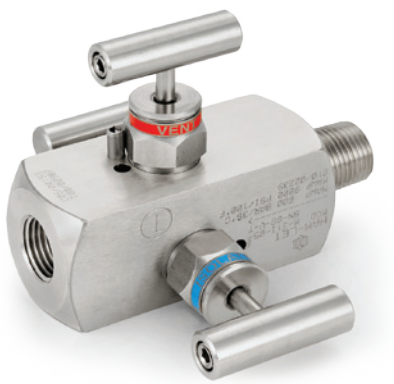

ORDERING INFORMATION FOR 3 WAY MANIFOLDS

M-3 1 A - 10 - 8 N - SS - T - LD - OC

Family

M-3	3 Way Manifold

Flow Scheme

0	(See table A)
1	
2	

Valves Position

A	Angle Flat
S	Straight
M	Angle Square
H	H- Type
I	In - line

(See table A)

End Connection

00	Female integral Let-Lok
10	Female to Female
80	Male to Male
85	Male to Female
15	Female to Flange
90	Flange to Flange

Size

8	1/2”
4	1/4”
6	3/8”

Type End Connection

FF	Flange*
N	NPT
G	BSPP
R	BSPT
NF	NPT to Flange*
RF	BSPT to Flange*
GF	BSPP to Flange*
L	Female integral Let-Lok

* Flange Standard per IEC 61518-A

Body Material

SS	SS 316
M	Monel 400
D	Duplex 1.4462
HC	Alloy C-276
T	Titanium
SD	SuperDuplex

Packing

T	PTFE
G	Grafoil®
V	Viton®
EP	EPDM
BU	NBR
KL	Kalrez®

Handle

T	T bar
AT	Anti Tamper
LD	Locking device

Option

OC	Oxygen Clean
K	10,000 psi (690 bar)
V	Vent port 1/2”

TABLE A: FLOW SCHEMATIC AND VALVE POSITION

Designator	Flow Schematic	Valves Position	Sketch
0	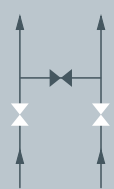	S	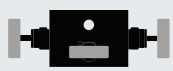
		H	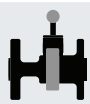
		I	
		A	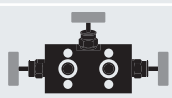
1	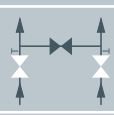	I	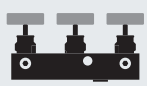
2	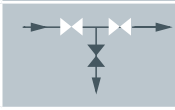	M	

Warning! For your safety
The system designer and user have the sole responsibility for selecting products suitable for their special application requirements, ensuring their safe and trouble-free installation, operation, and maintenance. Application details, material compatibility and product ratings should all be considered for each selected product. Improper selection, installation or use of products can cause property damage or personal injury.

STANDARD CONFIGURATION DIMENSIONS
5 WAY DIRECT MOUNT

Instrument Mount Type	End Connection			Ham-Let Ordering Description	Dimensions											
					A		B		C		D		E		F	
	Process	Instrument	Vent / Bleed		mm	in	mm	in	mm	in	mm	in	mm	in	mm	in
Direct mount	1/2" Female NPT	*Flange	1/4" Female NPT	M-50A-15-8NF-SS-V-T	265.0	10.43	41.0	1.61	106.0	4.17	170.0	6.69	32.0	1.26	16.0	0.63
	1/2" Female NPT	*Flange	1/4" Female NPT	M-53T-15-8NF-SS-V-T	220.0	8.66	79.0	3.11	122.0	4.80	140.0	5.51	32.0	1.26	16.0	0.63

* Flange Standard per IEC 61518-A

M-50A-15-8NF-SS-V-T

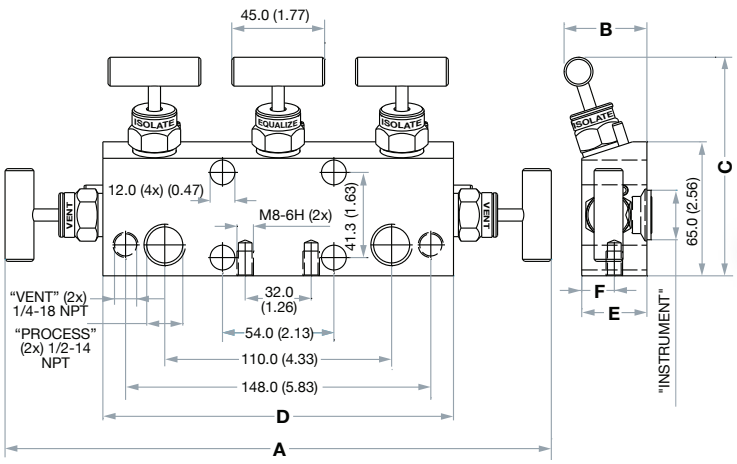

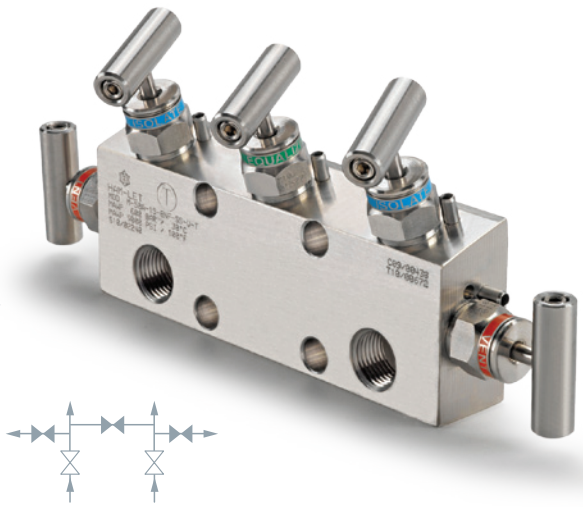

M-53T-15-8NF-SS-V-T

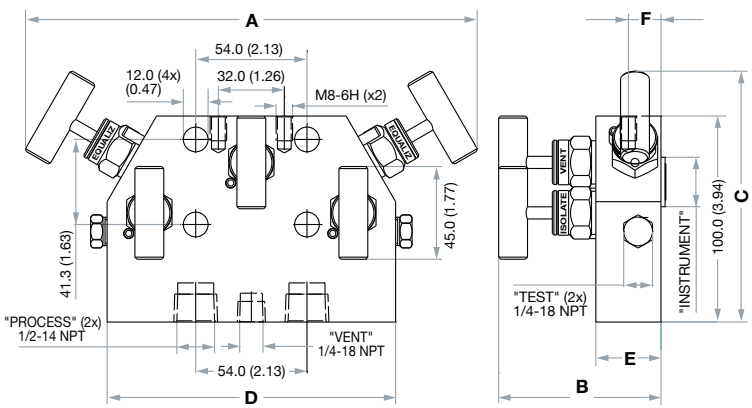

STANDARD CONFIGURATION DIMENSIONS
5 WAY DIRECT MOUNT

Instrument Mount Type	End Connection			Ham-Let Ordering Description	Dimensions											
					A		B		C		D		E		F	
	Process	Instrument	Vent / Bleed		mm	in	mm	in	mm	in	mm	in	mm	in	mm	in
Direct mount	*Flange	*Flange	1/4” Female NPT	M-54H-90-FF-SS-V-T	210.0	8.27	108.0	4.25	105.0	4.13	115.0	4.53	60.0	2.36	12.5	049

* Flange Standard per IEC 61518-A

M-54H-90-FF-SS-V-T

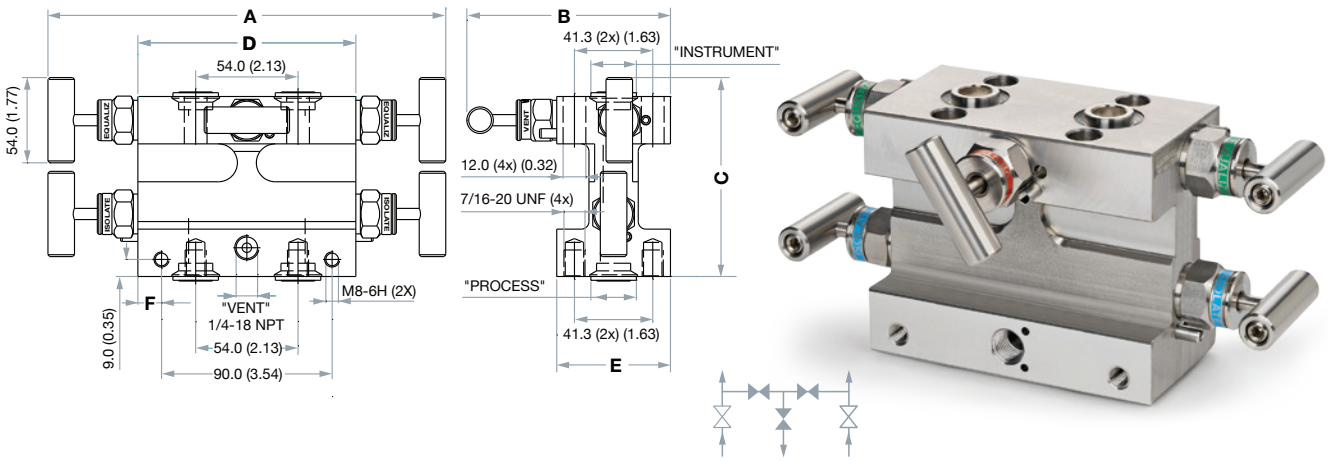

STANDARD CONFIGURATION DIMENSIONS
5 WAY REMOTE MOUNT

Instrument Mount Type	End Connection			Ham-Let Ordering Description	Dimensions											
					A		B		C		D		E		F	
	Process	Instrument	Vent / Bleed		mm	in	mm	in	mm	in	mm	in	mm	in	mm	in
Remote mount	1/2” Female NPT	1/2” Female NPT	1/4” Female NPT	M-53S-10-8N-SS-V-T	210.0	8.27	80.0	3.15	113.0	4.45	115.0	4.53	32.0	1.26	45.0	1.77
	1/2” Female NPT	1/2” Female NPT	1/4” Female NPT	M-50A-10-8N-SS-V-T	265.0	10.43	41.0	1.61	106.0	4.17	170.0	6.69	32.0	1.26	16.0	0.63

M-53S-10-8N-SS-V-T

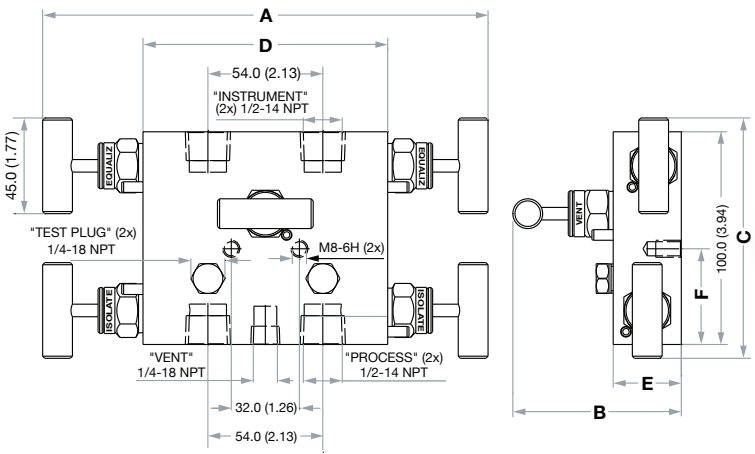

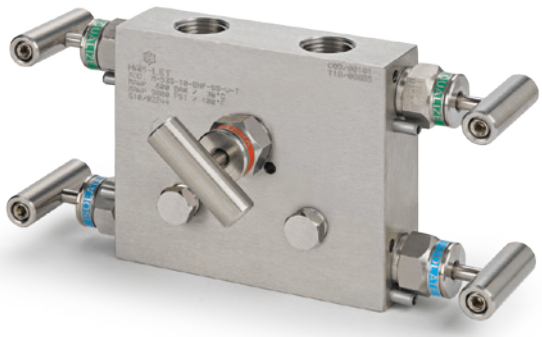

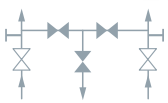

M-50A-10-8N-SS-V-T

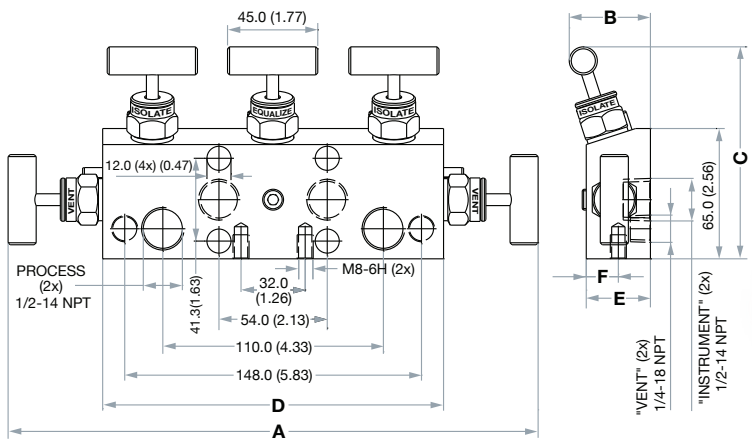

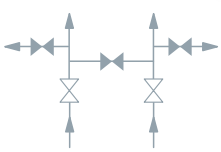

ORDERING INFORMATION FOR 5-WAY MANIFOLDS:

M-5 0 A - 10 - 8 N - SS - T - LD - OC

Family

M-5	5 Way Manifold

Flow Scheme

0	(See table A)
1	
2	
3	
4	

Valves Position

A	Angle Flat
S	Straight
T	Taper
H	H- Type

(See table A)

End Connection

00	Female integral Let-Lok
10	Female to Female
15	Female to Flange
90	Flange to Flange

Size

8	1/2”
4	1/4”
6	3/8”

Type End Connection

FF	Flange*
N	NPT
G	BSPP
R	BSPT
NF	NPT to Flange*
RF	BSPT to Flange*
GF	BSPP to Flange*
L	Female integral Let-Lok

* Flange Standard per IEC 61518-A

Body Material

SS	SS 316
M	Monel 400
D	Duplex 1.4462
HC	Alloy C-276
T	Titanium
SD	SuperDuplex

Packing

T	PTFE
G	Grafoil®
V	Viton®
EP	EPDM
BU	NBR
KL	Kalrez®

Option

OC	Oxygen Clean
LF	Lubricant Free
K	10,000 psi (690 bar)
V	Vent port 1/2”

Handle

T	T bar
AT	Anti Tamper
LD	Locking device

TABLE A: FLOW SCHEMATIC AND VALVE POSITION

Designator	Flow Schematic	Valves Position	Sketch
0	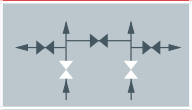	A	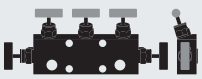
1	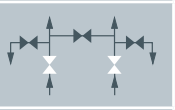	A	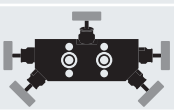
2	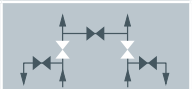	T	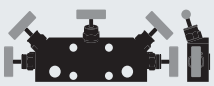
3	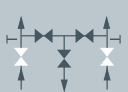	T	
		S	
4	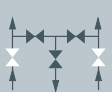	H	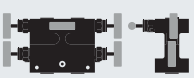
		A	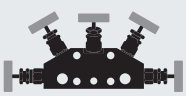
		I	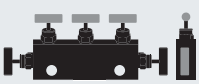

Warning! For your safety
The system designer and user have the sole responsibility for selecting products suitable for their special application requirements, ensuring their safe and trouble-free installation, operation, and maintenance. Application details, material compatibility and product ratings should all be considered for each selected product. Improper selection, installation or use of products can cause property damage or personal injury.

Astava Manifolds, Rev.02,September 2011

T–TYPE & IN–LINE FILTER

H-600R & H-600 SERIES

HAM-LET®
ADVANCED CONTROL TECHNOLOGY

H-600R FEATURES

- Bar Stock 316 St.St. or Brass Construction
- On-line Maintenance
- High-Pressure Characteristics (6000 psi in 316St.St. and 2000 psi in brass)
- HAM-LET Let-Lok® Ends, Male & Female NPT, and HTC® Face Seal
- Replaceable sintered filtration elements are available in 0.5, 2, 7, 15, 40, 60, 90, µm.
- Replaceable strainer filtration elements are available in 140, 230, 440µm

GENERAL

The H-600R Series is a T- type filtration device, which will protect system components from fluid particles and contaminants.
The H-600R provides easy on-line maintenance without disassembling it from the system.

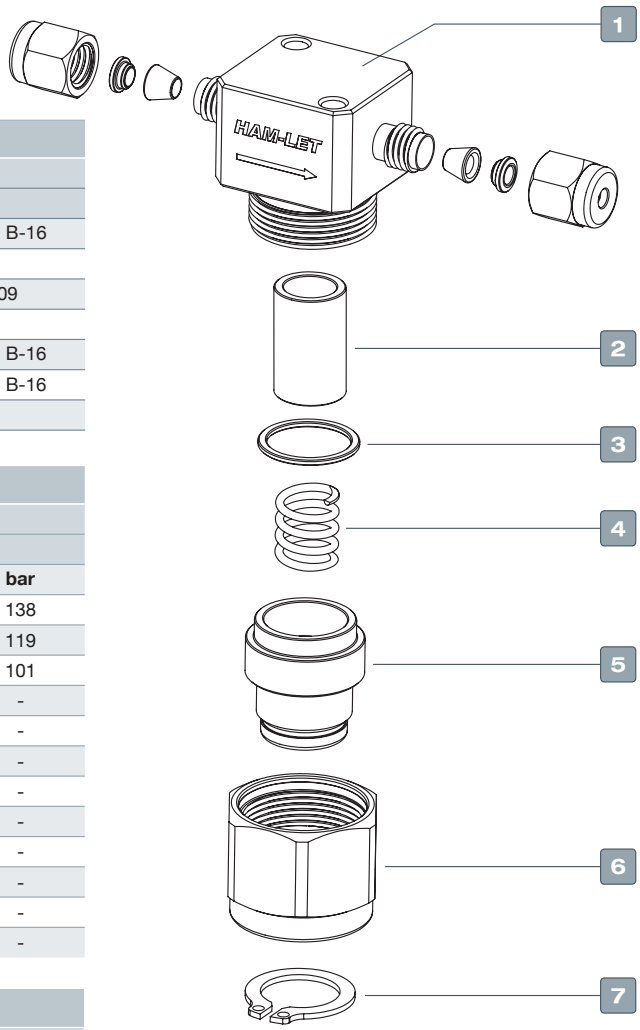

T-TYPE FILTERS MATERIALS OF CONSTRUCTION

No.	Components	Qty	Material	
			316 St. St.	Brass
1	Body	1	St.St.ASTM A-276	Brass ASTM B-16
2	Filtration Element	1	316 St.St. (Sintered) / Streiner	
3	Gasket Ring	1	316St.St. (Silver Plated)	Aluminum / B 209
4	Spring	1	St.St. 302	
5	Insert	1	St.St.ASTM A-276	Brass ASTM B-16
6	Nut	1	316St.St.(Silver Plated)	Brass ASTM B-16
7	Locking Ring	1	St.St 304	

T-TYPE FILTERS PRESSURE TEMPERATURE RATING

Temperature °F (°C)		All 316 St.St.		All Brass	
		Allowed Working Pressure, psig / bar			
Min.	Max.	psig	bar	psig	bar
-20 (-28)	100 (37)	6000	414	2000	138
	200 (93)	5160	356	1730	119
	300 (148)	4660	321	1470	101
	400 (204)	4280	295	-	-
	500 (260)	3980	274	-	-
	600 (315)	3760	259	-	-
	650 (343)	3700	255	-	-
	700 (371)	2600	248	-	-
	750 (398)	3520	243	-	-
	800 (426)	3460	239	-	-
	850 (454)	3380	233	-	-
	900 (482)	3280	223	-	-

T-TYPE FILTERS FILTRATION AREA

	Connection Size	Sintered element	Strainer element
		in² (mm²)	in² (mm²)
T-type Filters	1/8, 1/4, 3mm ,6mm	1.3 (830)	1.0 (640)
	3/8, 1/2, 8-12mm	2 (1280)	1.7 (1090)

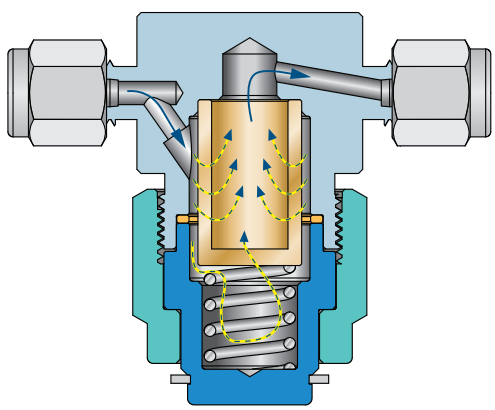

CLEANING & PACKAGING

Packaging (Procedure 8075).
HAM-LET Filters with face-seal end connections are treated with Oxygen Cleaning and Packaging (Procedure 8055).
Oxygen Cleaning and Packaging for other end connections are available as an option.

TESTING

The H-600 and H-600R series designs have been tested for Proof and Burst.
Each HAM-LET filter is Nitrogen tested for leakage at 1000 psi.

T-TYPE FILTERS, PRESSURE DROP

Nominal Element Pore Size *µm*	Inlet Pressure, psig (bar)						Pressure Drop, psig (bar)					
	5 (0.34)		10 (0.68)		15 (1.0)		10 (0.86)		50 (3.4)		100 (6.8)	
	Air flow						Water flow					
	std ft3/min	std L/min	std ft3/min	std L/min	std ft3/min	std L/min	US gal/min	L/min	US gal/min	L/min	US gal/min	L/min
Connection Size: 1/8", 3MM							**Connection Size: 1/8", 3MM**					
0.5	0.04	1.1	0.06	1.7	0.12	3.4	0.004	0.15	0.17	0.6	0.29	1.1
2	0.2	5.7	0.4	11.3	0.6	17.0	0.008	0.3	0.24	0.9	0.4	1.5
7	0.5	14.2	0.9	25.5	1.2	34.0	0.1	0.4	0.3	1.1	0.48	1.8
15	0.8	22.7	1.3	36.8	1.5	42.5	0.12	0.5	0.36	1.4	0.58	2.2
40	1.6	45.3	2.0	56.6	2.2	62.3	0.14	0.53	0.4	1.5	0.6	2.3
60	1.7	48.1	2.2	62.3	2.4	68.0	0.15	0.6	0.5	1.9	0.6	2.3
90	1.8	51.0	2.2	62.3	2.6	73.6	0.2	0.8	0.5	1.9	0.6	2.3
140, 230, 440	1.8	51.0	2.3	65.1	2.6	73.6	0.2	0.8	0.5	1.9	0.7	2.6
Connection Size: 1/4", 6MM							**Connection Size: 1/4", 6MM**					
0.5	0.12	3.4	0.26	7.4	0.48	13.6	0.004	0.15	0.17	0.6	0.29	1.1
2	0.6	17.0	1.14	39.6	2.3	65.1	0.24	0.9	0.86	3.3	1.3	4.9
7	1.4	39.6	2.9	82.1	4.7	133.1	0.4	1.5	1.3	4.9	2	7.6
15	1.2	34.0	2.9	82.1	4.7	133.1	0.5	1.9	1.3	4.9	2.1	7.9
40	2.3	65.0	4.7	133	7.4	210	0.65	2.45	2.0	7.6	3.1	11.8
60	3.1	87.8	5.9	167.1	8.5	240.7	0.8	3.0	2.7	10.2	3.9	14.8
90	4.1	116.1	7.5	212.4	10	283.2	1.1	4.2	3.4	12.9	4.9	18.5
140, 230, 440	4.7	133.1	8.8	249.2	12	339.8	1.2	4.5	4.2	15.9	5.6	21.2
Connection Size: 3/8", 1/2", 8-12MM							**Connection Size: 3/8", 1/2", 8-12MM**					
0.5	0.36	10.2	0.86	24.4	1.6	45.3	0.09	0.3	0.4	1.5	0.76	2.9
2	1.4	39.6	2.8	79.3	4	113.3	0.26	1.0	1.1	4.2	1.6	6.1
7	1.8	51.0	4.2	118.9	6.8	192.6	0.64	2.4	2.2	8.3	3.5	13.2
15	1.8	51.0	4.9	138.8	7.9	223.7	0.84	3.2	2.6	9.8	4.1	15.5
40	4.2	119	9.1	257.5	14	396	1.3	4.9	4.2	15.9	5.9	22.3
60	5.1	144.4	10	283.2	15	424.8	1.5	5.7	4.8	18.2	6.7	25.4
90	6.1	172.7	11	311.5	16	453.1	1.7	6.4	5.5	20.8	7.6	28.8
140, 230, 440	7.2	203.9	14	396.4	20	566.3	2.4	9.1	7.2	27.3	10	37.9

Outlet is open to atmosphere.

H-600R T-TYPE

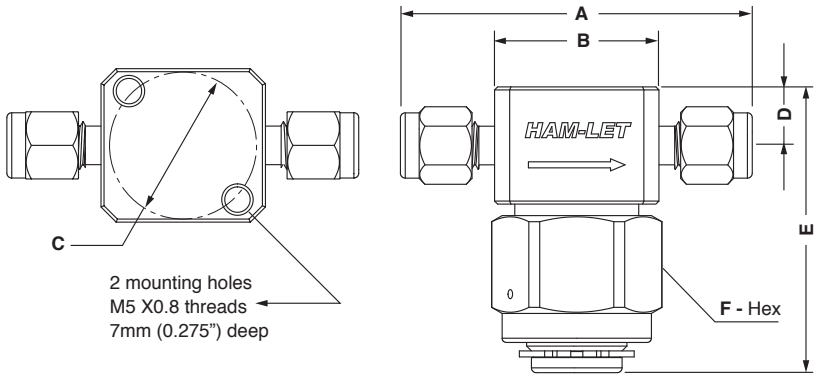

T-TYPE STANDARD CONFIGURATION DIMENSIONS

Orifice		Connection Size		A		B		C		D		E		F	
mm	inch	Inlet	Outlet	mm	in	mm	in	mm	in	mm	in	mm	in	mm	in
2.39	0.094	1/8'' LET-LOK®	1/8'' LET-LOK®	57.6	2.27	27.1	1.07	25.4	1.00	9.80	0.39	47.4	1.87	25.4	1.00
4.41	0.174	1/4'' LET-LOK®	1/4'' LET-LOK®	62.8	2.47	26.8	1.06	25.4	1.00	9.80	0.39	47.4	1.87	25.4	1.00
5.41	0.213	3/8'' LET-LOK®	3/8'' LET-LOK®	72.2	2.84	33.6	1.32	28.8	1.13	11.6	0.46	56.0	2.20	28.6	1 1/8
6.35	0.250	1/2'' LET-LOK®	1/2'' LET-LOK®	77.3	3.04	33.4	1.31	28.8	1.13	11.6	0.46	56.0	2.20	28.6	1 1/8
4.41	0.174	6MM LET-LOK®	6MM LET-LOK®	62.4	2.46	26.8	1.06	25.4	1.00	9.80	0.39	47.6	1.87	25.4	1.00
5.41	0.213	8MM LET-LOK®	8MM LET-LOK®	72.2	2.84	35.2	1.39	28.8	1.13	11.6	0.46	56.0	2.20	28.6	1 1/8
6.35	0.250	10MM LET-LOK®	10MM LET-LOK®	72.5	2.85	33.6	1.32	28.8	1.13	11.6	0.46	56.0	2.20	28.6	1 1/8
6.35	0.250	12MM LET-LOK®	12MM LET-LOK®	77.3	3.04	33.4	1.31	28.8	1.13	11.6	0.46	56.0	2.20	28.6	1 1/8
4.41	0.174	1/8'' Female NPT	1/8'' Female NPT	50.7	2.00	25.4	1.00	25.4	1.00	9.80	0.39	47.6	1.87	25.4	1.00
4.41	0.174	1/4'' Female NPT	1/4'' Female NPT	54.2	2.13	25.4	1.00	25.4	1.00	9.80	0.39	47.6	1.87	25.4	1.00
4.41	0.174	1/4'' Male NPT	1/4'' Male NPT	54.2	2.13	25.4	1.00	25.4	1.00	9.80	0.39	47.6	1.87	25.4	1.00
6.35	0.250	3/8'' Male NPT	3/8'' Male NPT	60.4	2.38	31.7	1.25	28.8	1.13	11.6	0.46	56.0	2.20	28.6	1 1/8
6.35	0.250	1/2'' Male NPT	1/2'' Male NPT	70.0	2.76	31.7	1.25	28.8	1.13	11.6	0.46	56.0	2.20	28.6	1 1/8
4.41	0.174	1/4'' Male Face Seal	1/4" Male Face Seal	58.8	2.31	27.2	1.07	25.4	1.00	9.80	0.39	47.6	1.87	25.4	1.00

Dimensions are for reference only, and are subject to change without notice.

H-600R SERIES BY-PASS/PURGE

(Please see ordering information)

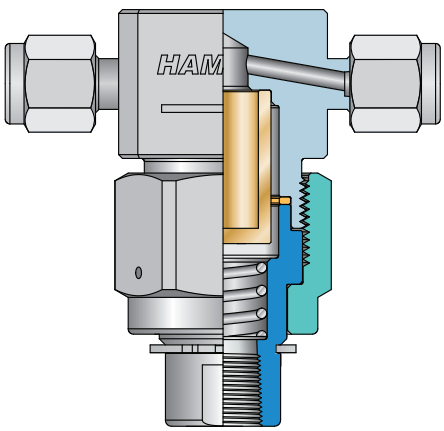

H-600 FEATURES

- Bar Stock 316St.St. or Brass Construction
- Moderate Pressure Characteristics (3000 psi in 316 St.St. and 1000 psi in Brass)
- HAM-LET LET-LOK® Ends, Male & Female NPT, and HTC® Face-Seal Bead
- Replaceable sintered filtration elements are available in 0.5, 2, 7, 15, 40, 60, 90, µm.
- Replaceable strainer filtration elements are available in 140, 230, 440µm.

GENERAL

The H-600 Series is an In-Line filtration device. It will be installed in a system to protect the system components from fluid particles and contaminants.

IN-LINE FILTER MATERIALS OF CONSTRUCTION

No.	Qty	Qty	Material	
			316 St. St.	Brass
1	Body	1	St.St.ASTM A-276	Brass ASTM B-16
2	Filtration Element	1	316 St.St.	
3	Spring	1	316 St.St.	
4	Gasket Ring	1	316St.St. (Silver Plated)	Aluminum / B 209
5	End	1	St.St.ASTM A-276	Brass ASTM B-16
6	Front Ferulle	2	St.St.ASTM A-276	Brass ASTM B-16
7	Back Ferulle	2	St.St.ASTM A-276	Brass ASTM B-16
8	Nut	2	St.St.ASTM A-276	Brass ASTM B-16

IN-LINE FILTER PRESSURE TEMPERATURE RATING

Connection Size		1/8", 1/4", 3mm, 6mm		3/8", 1/2", 8-12mm		All	
Material Temp. °F (°C)		316St.St.		316St.St.		Brass	
		Allowed Working Pressure, psig / bar					
Min.	Max.	psig	bar	psig	bar	psig	bar
-20 (-28)	100 (37)	3000	207	2500	172	1000	69
	200 (93)	2580	178	2150	148	780	54
	300 (148)	2330	161	1940	134	680	47
	400 (204)	2140	148	1780	123	-	-
	500 (260)	1990	137	1660	114	-	-
	600 (315)	1880	130	1560	108	-	-
	650 (343)	1845	127	1540	106	-	-
	700 (371)	1800	124	1500	103	-	-
	750 (398)	1760	121	1460	101	-	-
	800 (426)	1725	119	1440	99	-	-
	850 (454)	1690	117	1410	97	-	-
	900 (482)	1640	113	1360	94	-	-

IN-LINE FILTRATION AREA

	Connection Size	Sintered element	Strainer element
		in² (mm²)	in² (mm²)
In-Line Filters	1/8, 3mm	0.55 (350)	-
	1/4, 6mm	1.3 (830)	1.0 (640)
	3/8, 1/2, 8-12mm	2 (1280)	1.7 (1090)

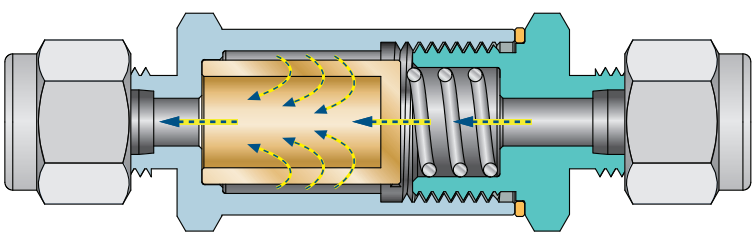

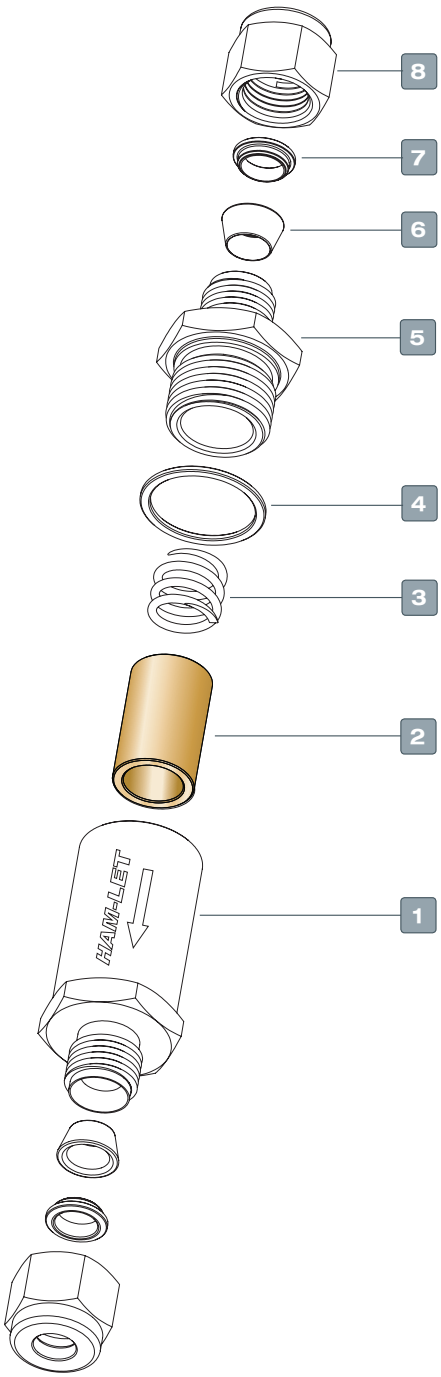

H-600 IN-LINE

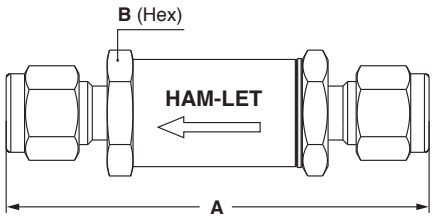

IN-LINE FILTER STANDARD CONFIGURATION DIMENSIONS

Orifice		Conection Size		A		B (Hex)	
mm	inch	Inlet	Outlet	mm	inch	mm	inch
2.39	0.094	1/8'' LET-LOK®	1/8'' LET-LOK®	57.5	2.26	14.4	9/16
4.75	0.187	1/4'' LET-LOK®	1/4'' LET-LOK®	74.7	2.94	19.05	3/4
7.14	0.281	3/8'' LET-LOK®	3/8'' LET-LOK®	81.4	3.20	25.4	1
10.30	0.406	1/2'' LET-LOK®	1/2'' LET-LOK®	88.5	3.48	25.4	1
2.39	0.094	3MM LET-LOK®	3MM LET-LOK®	57.5	2.26	14.4	9/16
4.75	0.187	6MM LET-LOK®	6MM LET-LOK®	74.9	2.95	19.05	3/4
6.40	0.252	8MM LET-LOK®	8MM LET-LOK®	80.1	3.15	25.4	1
7.90	0.311	10MM LET-LOK®	10MM LET-LOK®	81.9	3.22	25.4	1
2.39	0.094	1/8'' Female NPT	1/8'' Female NPT	55.0	2.17	14.4	9/16
4.75	0.187	1/4'' Female NPT	1/4'' Female NPT	73.0	2.87	19.05	3/4
10.30	0.406	1/2” Female NPT	1/2” Female NPT	85.5	3.36	26.69	1 1/16
4.75	0.187	1/4'' Male NPT	1/4'' Male NPT	68.2	2.69	19.05	3/4
9.50	0.374	3/8” Male NPT	3/8” Male NPT	71.1	2.8	25.4	1
4.75	0.187	1/4'' Male Face Seal	1/4'' Male Face Seal	71.5	2.81	19.05	3/4
10.3	0.406	1/2'' Male Face Seal	1/2'' Male Face Seal	78.4	3.08	25.4	1

IN-LINE FILTER PRESSURE DROP

Nominal Element Pore Size *µm*	Inlet Pressure, psig (bar)						Pressure Drop, psig (bar)					
	5 (0.34)		10 (0.68)		15 (1.0)		10 (0.86)		50 (3.4)		100 (6.8)	
	Air flow						water flow					
	std ft3/min	std L/min	std ft3/min	std L/min	std ft3/min	std L/min	US gal/min	L/min	US gal/min	L/min	US gal/min	L/min
Connection Size: 1/8”, 3MM							**Connection Size: 1/8”, 3MM**					
0.5	0.04	1.1	0.06	1.7	0.12	3.4	0.01	0.03	0.04	0.15	0.12	0.5
2	0.2	5.7	0.4	11.3	0.6	17.0	0.08	0.3	0.24	0.9	0.4	1.5
7	0.5	14.2	0.9	25.5	1.2	34.0	0.1	0.4	0.3	1.1	0.48	1.8
15	0.8	22.7	1.3	36.8	1.5	42.5	0.12	0.5	0.36	1.4	0.58	2.2
60	1.7	48.1	2.2	62.3	2.4	68.0	0.15	0.6	0.5	1.9	0.6	2.3
90	1.8	51.0	2.2	62.3	2.6	73.6	0.2	0.8	0.5	1.9	0.7	2.6
Connection Size: 1/4”, 6MM							**Connection Size: 1/4”, 6MM**					
0.5	0.12	3.4	0.26	7.4	0.48	13.6	0.04	0.2	0.17	0.17	0.29	1.1
2	0.6	17.0	1.4	39.6	2.3	65.1	0.24	0.9	0.86	0.86	1.3	4.9
7	1.2	34.0	2.9	82.1	4.7	133.1	0.4	1.5	1.3	1.3	2	7.6
15	1.4	39.6	2.9	82.1	4.7	133.1	0.5	1.9	1.3	1.3	2.1	7.9
40	2.2	62.3	4.7	133	7.3	206.5	0.75	2.8	2.6	2.6	4.1	15.5
60	3.1	87.8	5.9	167.1	8.5	240.7	0.9	3.4	3.3	3.3	4.6	17.4
90	4.1	116.1	7.5	212.4	10	283.2	1.2	4.5	4.2	4.2	6.1	23.1
140, 230, 440	4.7	133.1	8.8	249.2	12	339.8	1.7	6.4	5.6	5.6	7.8	29.5
Connection Size: 3/8”, 1/2”, 8-12MM							**Connection Size: 3/8”, 1/2”, 8-12MM**					
0.5	0.36	10.2	0.86	24.4	1.6	45.3	0.09	0.34	0.4	1.5	0.76	2.9
2	1.4	39.6	2.8	79.3	4	113.3	0.26	1.0	1.1	4.1	1.6	6.1
7	1.8	51.0	4.2	118.9	6.8	192.6	0.64	2.4	2.2	8.3	3.5	13.2
15	1.8	51.0	4.9	138.8	7.9	223.7	0.84	3.2	2.6	9.8	4.1	15.5
40	4.2	119	9.1	257.5	14	396	1.5	5.67	5.9	22.3	9.1	34.4
60	5.1	144.4	10	283.3	15	424.8	2	7.5	6.7	25	10	37.9
90	6.1	172.7	11	311.5	16	453.1	2.3	8.7	7.6	28	11	41.6
40, 140, 200	7.2	203.9	14	396.4	20	566.3	4.8	18	15	56	19	71.9

Outlet is open to atmosphere.

H-600 IN-LINE FILTER & H-600R T-TYPE FILTER ORDERING INFORMATION

H-6 00 R - SS - L - 1/4 - 2 - OPTIONAL

Fillter Series

Valve Type (Inlet-Outlet)

00	- LET-LOK® End
10	- Female End
80	- Male End

* For other Filter types, please consult HAM-LET representative

Body Type

BLANK	In Line
R	T Type

Body and Ends Material

SS	- St.St. 316
B	- Brass

End Connection Type

L	- LET-LOK® End
N	- Threaded NPT
G	- ISO Parallel
R	- ISO Tapered
GL	- Metal Gasket Face seal
HO	- Male O-ring Face seal

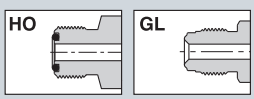

Other end connections are available upon request.

End Connection Size

1/8	**3** MM
1/4	6 MM
	8 MM
3/8	10 MM
1/2	12 MM

Filtration Level (Micron)

0.1
0.5
2
7
15
40
60
90
140
230
440
LE

LE - Less Element

Treatment

BLANK	- Standard Cleaning & Passivation
OC	- Oxygen Clean
LF	- Lubricant Free

Purge Options

BLANK Standard - No bypass

BYPASS DESIGNATOR - See table 1

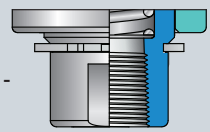

SPARE KIT

Gasket
Kit includes gasket ring, disassembly and reassembly instructions.

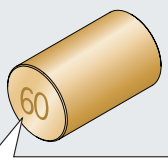

Filtration Element
Kit includes element, disassembly and reassembly instructions.

Filtration Level is marked on the element (µm)

Series	End connection size	Filtration Element Kit Ordering Number	Gasket Ring Kit Ordering Number	
		Stainless & Brass Filters	Stainless Filters	Brass Filters
H-600	1/8", 3MM	Z-600-FK-1/8-XX	Z-600-GK-1/8	Z-600-GK-1/8-B
	1/4", 6MM	Z-600-FK-1/4-XX	Z-600-GK-1/4	Z-600-GK-1/4-B
	3/8", 1/2" 8MM, 10MM, 12MM	Z-600-FK-1/2-XX	Z-600-GK-1/2	Z-600-GK-1/2-B
H-600R	1/8", 1/4", 3MM, 6MM	Z-600-FK-1/4-XX	Z-600R-GK-1/4	Z-600R-GK-1/4-B
	3/8", 1/2" 8MM, 10MM, 12MM	Z-600-FK-1/2-XX	Z-600R-GK-1/2	Z-600R-GK-1/2-B

XX - Means filtration level.
Filtration kit ordering example: 2micron Filtration Element Kit for H-600R 3mm : Z-600-FK-1/4-2
Gasket kit ordering example: Gasket Kit for H-600 3mm : Z-600-GK-1/8
For Oxygen and Lubricant free service, add OC designator to the end of the kit ordering number

Table 1:

H600-R T-TYPE SERIES BYPASS/PURGE

Port enables sampling or purging

Series	Valve End Connection Size	Bypass/purge port end connection	Overall Height in (mm)	Desig.
H-600R	1/8",1/4", 3mm, 6mm	1/8'' LET-LOK®	2.36 (60.0)	B1
		1/8'' Female NPT	2.08 (53.0)	B2
		1/4'' LET-LOK®	2.81 (71.5)	B3
	3/8", 1/2", 8mm, 10mm, 12mm	1/8'' Female NPT	2.46 (62.5)	B4
		1/4'' LET-LOK®	3.15 (80.0)	B5
		3/8'' LET-LOK®	3.19 (81.0)	B6
		1/2'' LET-LOK®	3.42 (87.0)	B7

Warning! For your safety

The system designer and user have the sole responsibility for selecting products suitable for their special application requirements, ensuring their safe and trouble-free installation, operation, and maintenance. Application details, material compatibility and product ratings should all be considered for each selected product. Improper selection, installation or use of products can cause property damage or personal injury.

H-600 & h600R, Rev.09, July 2011

VENT PROTECTOR FITTINGS
VEP

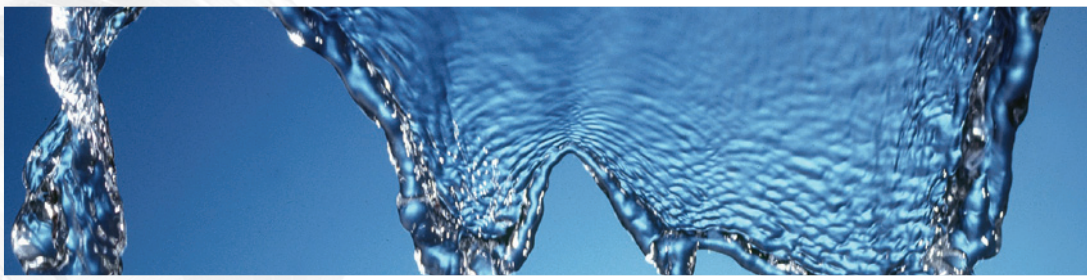

HAM-LET®
ADVANCED CONTROL TECHNOLOGY

DESCRIPTION

The Vent Protector Fitting (VEP) is used to protect tubes that are exposed to atmospheric pressure, instruments that are open to atmospheric pressure and every tube outlet that is open to atmospheric pressure.

CLEANING AND PACKAGING:

HAM-LET VEP are treated with Passivation, Cleaning and Packaging (Procedure 8075). HAM-LET VEP with Face-Seal End Connections are treated with Oxygen Cleaning and Packaging.

TESTING

The VEP designs have been tested for Proof, Burst and Leakage. Every VEP is factory tested for proper assembly.

MATERIALS OF CONSTRUCTION

No.	Components	Qty	Material
1	Vent Fitting Filter Body	1	St.St. 316
2	Vent Fitting Filter Grid 40 Mesh	1	St.St. 316
3	Spring clip 20 DIN472	1	St.St.

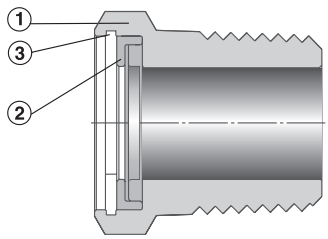

METHOD OF OPERATION

The end of the fitting has a filter screen of 40 mesh, made of 316 st.st. This screen prevents foreign objects such as insects, from entering the system and causing damage.

This fitting is available in 316 st.st and in brass, in sizes from 1/8" to 1".

The threads are NPT, BSPT or others, according to request.

STANDARD CONFIGURATION DIMENSIONS

Description	T Thread	L		L1		D Min Opening		F	
		in	mm	in	mm	in	mm	in	mm
VEP-SS-N-1/8	1/8	0.56	14.22	0.38	9.65	0.19	4.82	1/2	12.7
VEP-SS-N-1/4	1/4	0.78	19.81	0.56	14.22	0.28	7.11	9/16	14.3
VEP-SS-N-1/2	1/2	1.03	26.16	0.75	19.05	0.50	12.7	7/8	22.2
VEP-SS-N-3/8	3/8	0.81	20.57	0.56	14.22	0.41	10.41	11/16	17.5
VEP-SS-N-3/4	3/4	1.06	26.92	0.75	19.05	0.72	18.28	11/16	17.5
VEP-SS-N-1"	1	1.34	34.03	0.94	23.87	0.88	22.35	1.3/8	34.9

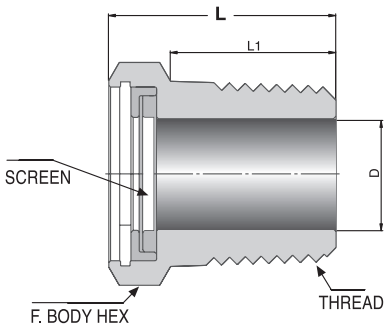

ORDERING INFORMATION

VEP – **SS** – **N** – **1/4**

Vent Protector Fitting

Material

SS	- St.St. 316
B	- Brass

End Connection

N	- NPT
R	- BSPT

End Connection Size

1/8 inch
1/4 inch
3/8 inch
1/2 inch
3/4 inch
1 inch

Warning! For your safety

The system designer and user have the sole responsibility for selecting products suitable for their special application requirements, ensuring their safe and trouble-free installation, operation, and maintenance. Application details, material compatibility and product ratings should all be considered for each selected product. Improper selection, installation or use of products can cause property damage or personal injury.

VEP, Rev06. Jaly 2011

QCLOK®

INSTRUMENTATION QUICK CONNECTORS

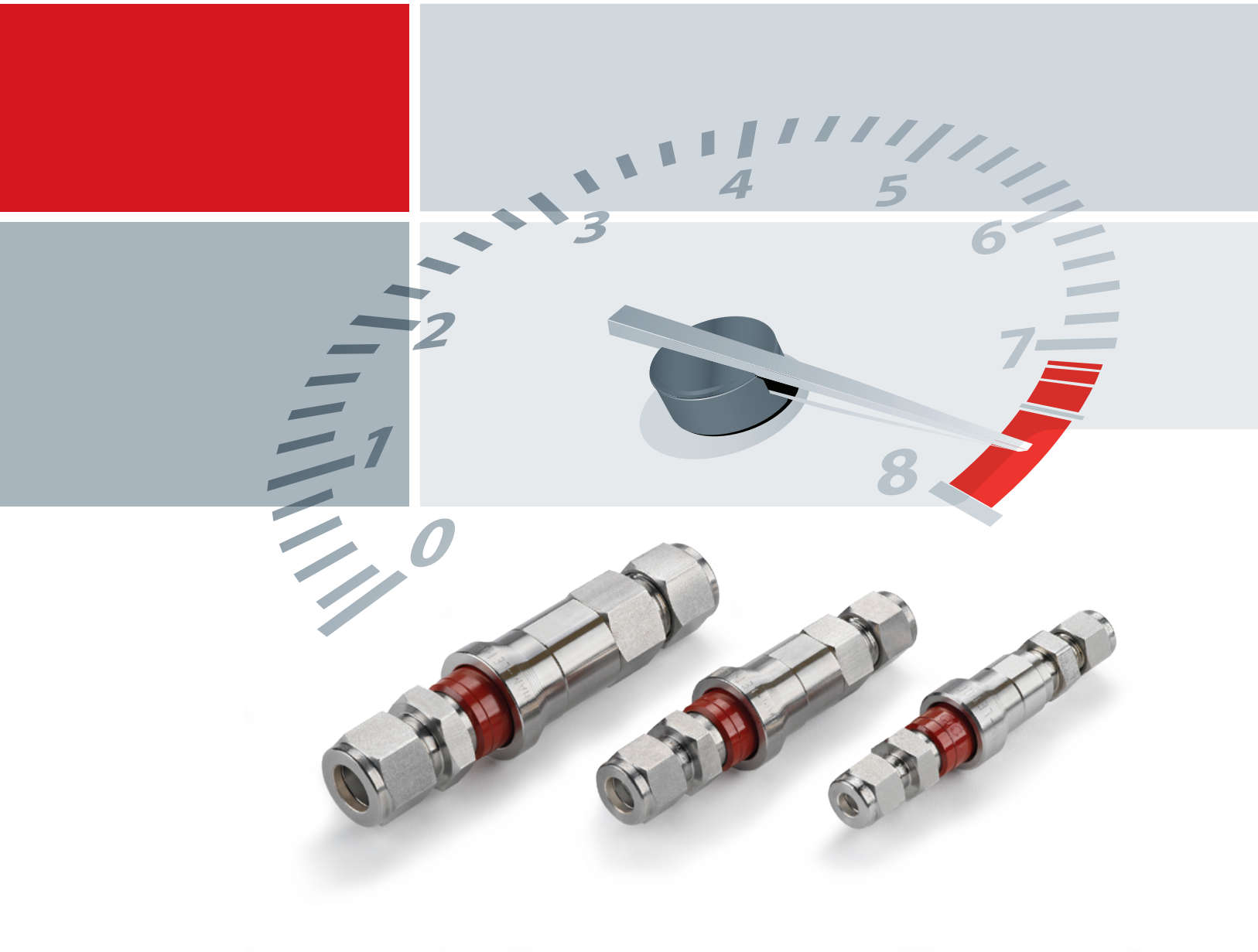

HAM-LET®
ADVANCED CONTROL TECHNOLOGY

FEATURES

- Valved and non-valved stems available.
- Working pressure rating: up to 3,000psig (206bar).
- Interchangeable and intermixable with major manufacturers' Instrumentation Quick Connectors.
- Viton® O-Rings as standard, other O-rings are available per request.
- Smooth and safe connection between the QC-LOK® Connector valves is reached by a simple pushing operation due to a smart heavy duty locking mechanism.
- The QC-LOK® Instrumentation Quick Connectors validation tests are based on ANSI/B93.51M – 1980.

GENERAL

The HAM-LET QC-LOK® Instrumentation Quick Connectors are designed for service in a large variety of applications, with MAWP up to 3,000psig (206 bar).

Single and Double End Shutoff Stems

Single-end shutoff (SESO) - Stems have no valve and remain open when uncoupled.
Double-end shutoff (DESO) - Stems have valve and shut off when uncoupled.

MATERIALS OF CONSTRUCTION

		Components	Material
Valved and Non-Valved Stems	1	Body	316SS
	2	Sleeve	316SS
	3	Stem	316SS
	4	Stem nut	316SS
	5	Extender	316SS
Body	6	End connection	316SS
	7	Poppet	316SS
	8	Body	316SS
	9A*	Locking Balls	302SS
	9B**	Locking Dogs	316SS
	10	Sleeve	316SS
	11	Internal body	316SS

		Components	Material
O-Rings	12	Poppet seal	Viton
	13	End connection seal	Viton
	14A*	Body seal	Viton
	15	Stem seal	Viton
	16	Stem Internal seal	Viton
Springs	17	Poppet spring	316SS
	18	Body sleeve spring	316SS
	19	Stem sleeve spring	316SS
	20	Stem spring	316SS
	21	Stem sleeve locking ring	316SS
	22	Body sleeve locking ring	316SS

***A** - QC4 Only ****B** - QC6 and QC8 Only

QC4 CROSS SECTION

DESO

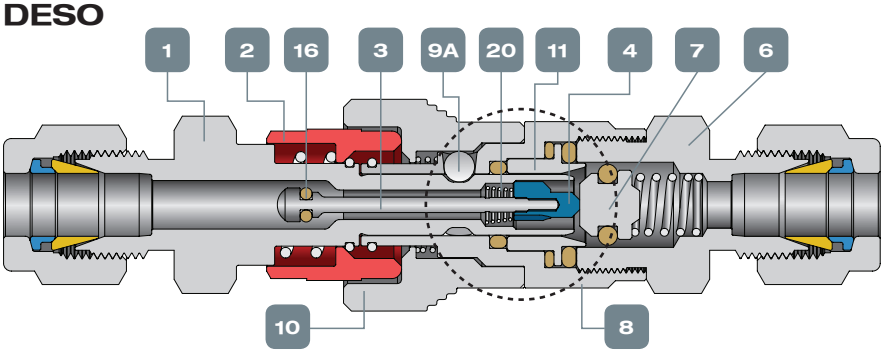

FLOW DIRECTION

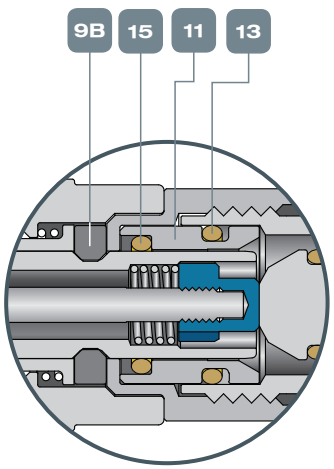

Detailed view
QC6 and QC8

SESO

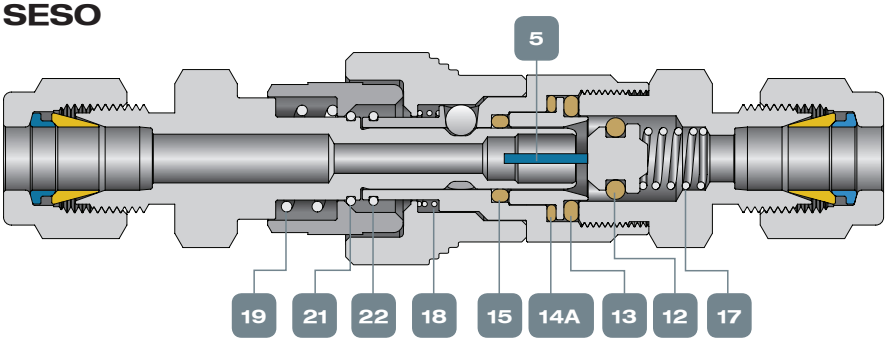

CLEANING & PACKAGING

HAM-LET Quick Connectors are treated with HAM-LET Passivation, Cleaning and Packaging (Procedure 8075).
Oxygen Cleaning and Packaging for Quick Connectors are available as an option (Procedure 8055).

TESTING

The Quick Connectors designs have been tested for Proof and Burst. Every Quick Connector is factory tested for proper assembly by leakage detection at 1000 psig (68 bar) or its maximum working pressure if less than 1000 psig (68 bar). The maximum allowable leakage is 0.1 std cc/min.

QC-LOK SERIES DIMENSIONS - STEM

Let-Lok Stem

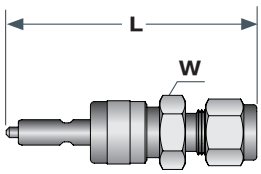

Fitting Size	Basic Ordering Numbers		Series	Flow Coefficient (Cv)		Dimensions		
	SESO	DESO		SESO	DESO	L SESO	L DESO	W
						Dimensions, in. (mm)		
1/8"	QC4-SS-S-L-1/8	NA	QC4	-	-	2.27 (57.8)		5/8
1/4"	QC4-SS-S-L-1/4	QC4-SS-D-L-1/4	QC4	0.3	0.2	2.36 (59.9)	2.42 (61.5)	5/8
3/8"	QC6-SS-S-L-3/8	QC6-SS-D-L-3/8	QC6	1.0	0.5	2.52 (64.0)	2.64 (67.1)	3/4
1/2"	QC8-SS-S-L-1/2	QC8-SS-D-L-1/2	QC8	2.4	1.5	2.96 (75.2)	3.16 (80.3)	15/16
						Dimensions, mm (in.)		
6	QC4-SS-S-L-6MM	QC4-SS-D-L-6MM	QC4	0.3	0.2	59.9 (2.36)	61.5 (2.42)	16
10	QC6-SS-S-L-10MM	QC6-SS-D-L-10MM	QC6	1.0	0.5	67.3 (2.65)	70.4 (2.77)	22
12	QC8-SS-S-L-12MM	QC8-SS-D-L-12MM	QC8	2.4	1.5	75.2 (2.96)	80.3 (3.16)	24

Male Pipe Thread Stem

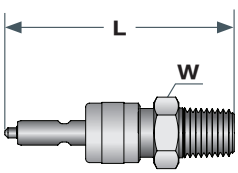

Fitting Size	Basic Ordering Numbers		Series	Flow Coefficient (Cv)		Dimensions, in. (mm)		
	SESO	DESO		SESO	DESO	L SESO	L DESO	W inch
NPT (ISO Tapered, BSPT*)								
1/8"	QC4-SS-S-MN-1/8	QC4-SS-D-MN-1/8	QC4	0.3	0.2	2.07 (52.6)	2.13 (54.1)	5/8
1/4"	QC4-SS-S-MN-1/4	QC4-SS-D-MN-1/4	QC4	0.3	0.2	2.22 (56.4)	2.28 (57.9)	5/8
3/8"	QC6-SS-S-MN-3/8	QC6-SS-D-MN-3/8	QC6	0.8	0.5	2.35 (59.7)	2.47 (62.7)	3/4
1/2"	QC8-SS-S-MN-1/2	QC8-SS-D-MN-1/2	QC8	2.0	1.3	2.84 (72.1)	3.04 (77.2)	15/16
ISO Parallel, BSPP								
1/8"	QC4-SS-S-MG-1/8	QC4-SS-D-MG-1/8	QC4	0.3	0.2	2.07 (52.6)	2.13 (54.1)	5/8
1/4"	QC4-SS-S-MG-1/4	QC4-SS-D-MG-1/4	QC4	0.3	0.2	2.22 (56.4)	2.28 (57.9)	5/8
3/8"	QC6-SS-S-MG-3/8	QC6-SS-D-MG-3/8	QC6	0.8	0.5	2.35 (59.7)	2.47 (62.7)	3/4
1/2"	QC8-SS-S-MG-1/2	QC8-SS-D-MG-1/2	QC8	2.0	1.3	2.84 (72.1)	3.04 (77.2)	15/16

* For ISO Tapered (BSPT) change MN to MR

Female Pipe Thread Stem

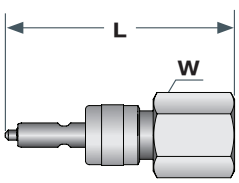

Fitting Size	Basic Ordering Numbers		Series	Flow Coefficient (Cv)		Dimensions, in. (mm)		
	SESO	DESO		SESO	DESO	L SESO	L DESO	W inch
NPT (ISO Tapered, BSPT*)								
1/8"	QC4-SS-S-FN-1/8	QC4-SS-D-FN-1/8	QC4	0.3	0.2	2.01 (51.1)	2.07 (52.6)	5/8
1/4"	QC4-SS-S-FN-1/4	QC4-SS-D-FN-1/4	QC4	0.3	0.2	2.26 (57.4)	2.32 (58.9)	3/4
3/8"	QC6-SS-S-FN-3/8	QC6-SS-D-FN-3/8	QC6	0.8	0.5	2.35 (59.7)	2.47 (62.7)	7/8
1/2"	QC8-SS-S-FN-1/2	QC8-SS-D-FN-1/2	QC8	2.0	1.3	2.82 (71.6)	3.02 (76.7)	1 1/16
ISO Parallel, BSPP								
1/8"	QC4-SS-S-FG-1/8	QC4-SS-D-FG-1/8	QC4	0.3	0.2	2.01 (51.1)	2.07 (52.6)	5/8
1/4"	QC4-SS-S-FG-1/4	QC4-SS-D-FG-1/4	QC4	0.3	0.2	2.26 (57.4)	2.32 (58.9)	3/4
3/8"	QC6-SS-S-FG-3/8	QC6-SS-D-FG-3/8	QC6	0.8	0.5	2.35 (59.7)	2.47 (62.7)	7/8
1/2"	QC8-SS-S-FG-1/2	QC8-SS-D-FG-1/2	QC8	2.0	1.3	2.82 (71.6)	3.02 (76.7)	1 1/16

* For ISO Tapered (BSPT) change FN to FR

QC-LOK SERIES DIMENSIONS - STEM

Let-Lok Bulkhead Stem

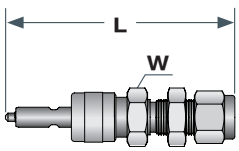

Fitting Size	Basic Ordering Numbers		Series	Dimensions				
				L		W	Max Panel Thickness	Min Panel Hole Dia
	SESO	DESO		SESO	DESO			
				Dimensions, in. (mm)				
1/4"	QC4-SS-S-LB-1/4	QC4-SS-D-LB-1/4	QC4	2.74 (69.6)	2.80 (71.1)	5/8	0.25 (6.4)	15/32 (11.9)
3/8"	QC6-SS-S-LB-3/8	QC6-SS-D-LB-3/8	QC6	3.21 (81.5)	3.33 (84.6)	3/4	0.44 (11.17)	0.59 (15.1)
1/2"	QC8-SS-S-LB-1/2	QC8-SS-D-LB-1/2	QC8	3.75 (95.2)	3.94 (100)	15/16	0.50 (12.7)	0.78 (19.8)
				Dimensions, mm (in.)				
6	QC4-SS-S-LB-6MM	QC4-SS-D-LB-6MM	QC4	69.6 (2.74)	71.1 (2.80)	16	6.4 (0.25)	11.9 (15/32)
10	QC6-SS-S-LB-10MM	QC6-SS-D-LB-10MM	QC6	81.7 (3.22)	84.8 (3.34)	22	11.2 (0.44)	16.6 (0.65)
12	QC8-SS-S-LB-12MM	QC8-SS-D-LB-12MM	QC8	95.3 (3.75)	100.1 (3.98)	24	12.7 (0.50)	19.8 (0.78)

QC-LOK SERIES DIMENSIONS - BODY

Let-Lok Body

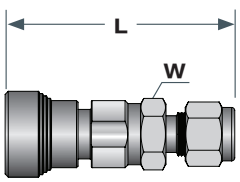

Fitting Size	Basic Ordering Number	Series	Dimensions	
			L	W
			Dimensions, in. (mm)	
1/8"	QC4-SS-B-L-1/8	QC4	2.26 (57.4)	5/8
1/4"	QC4-SS-B-L-1/4	QC4	2.30 (58.4)	5/8
3/8"	QC6-SS-B-L-3/8	QC6	2.58 (65.5)	3/4
1/2"	QC8-SS-B-L-1/2	QC8	3.09 (78.5)	15/16
			Dimensions, mm (in.)	
6	QC4-SS-B-L-6MM	QC4	58.4 (2.30)	16
10	QC6-SS-B-L-10MM	QC6	68.1 (2.68)	22
12	QC8-SS-B-L-12MM	QC8	78.5 (3.09)	24

Male Pipe Thread Body

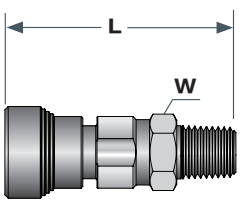

Fitting Size	Basic Ordering Number	Series	Dimensions, in. (mm)	
			L	W
	NPT (ISO Tapered, BSPT*)			
1/8"	QC4-SS-B-MN-1/8	QC4	2.01 (51.1)	5/8
1/4"	QC4-SS-B-MN-1/4	QC4	2.16 (54.9)	5/8
3/8"	QC6-SS-B-MN-3/8	QC6	2.38 (60.5)	3/4
1/2"	QC8-SS-B-MN-1/2	QC8	2.97 (75.4)	15/16
	ISO Parallel, BSPP			
1/8"	QC4-SS-B-MG-1/8	QC4	2.01 (51.1)	5/8
1/4"	QC4-SS-B-MG-1/4	QC4	2.16 (54.9)	5/8
3/8"	QC6-SS-B-MG-3/8	QC6	2.38 (60.5)	3/4
1/2"	QC8-SS-B-MG-1/2	QC8	2.97 (75.4)	15/16

* For ISO Tapered (BSPT) change MN to MR

QC-LOK SERIES DIMENSIONS - BODY

Female Pipe Thread Body

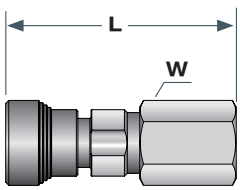

Fitting Size	Basic Ordering Number	Series	Dimensions, in. (mm)	
			L	W
NPT (ISO Tapered, BSPT*)				
1/8"	QC4-SS-B-FN-1/8	QC4	2.16 (54.9)	5/8
1/4"	QC4-SS-B-FN-1/4	QC4	2.42 (61.5)	3/4
3/8"	QC6-SS-B-FN-3/8	QC6	2.57 (65.3)	7/8
1/2"	QC8-SS-B-FN-1/2	QC8	3.22 (81.8)	1 1/16
ISO Parallel, BSPP				
1/8"	QC4-SS-B-FG-1/8	QC4	2.16 (54.9)	5/8
1/4"	QC4-SS-B-FG-1/4	QC4	2.42 (61.5)	3/4
3/8"	QC6-SS-B-FG-3/8	QC6	2.57 (65.3)	7/8
1/2"	QC8-SS-B-FG -1/2	QC8	3.22 (81.8)	1 1/16

* For ISO Tapered (BSPT) change FN to FR

Let-Lok Bulkhead Body

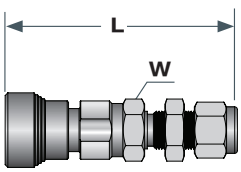

Fitting Size	Basic Ordering Number	Series	Dimensions	
			L	W
			Dimensions, in. (mm)	
1/4"	QC4-SS-B-LB-1/4	QC4	2.67 (67.8)	5/8
3/8"	QC6-SS-B-LB-3/8	QC6	3.28 (83.2)	3/4
1/2"	QC8-SS-B-LB-1/2	QC8	3.87 (98.2)	15/16
			Dimensions, mm (in.)	
6	QC4-SS-B-LB-6MM	QC4	67.8 (2.67)	16
10	QC6-SS-B-LB-10MM	QC6	83.4 (3.28)	22
12	QC8-SS-B-LB-12MM	QC8	98.1 (3.86)	24

Overall Length Calculation for QC Series

To calculate overall length in the coupled position, subtract the insertion depth from any overall Stem and Body combination length

SESO 1/4" : 28.6 mm (0.89 inch)
DESO 1/4" :30.2 mm (0.95 inch)
SESO 3/8" : 30.0 mm (1.18 inch)
DESO 3/8" :33.0 mm (1.3 inch)
SESO 1/2" : 37.6 mm (1.48 inch)
DESO 1/2" : 42.7 mm (1.68 inch)

Dimensions are for reference only, and are subject to change without notice

RECOMMENDATIONS

- It is recommended to install a filter ahead of the QC-LOK.
- Hanging hoses or other accessories should be supported in order to prevent side loads.
- The QC-LOK should be coupled or uncoupled at room temperature, and while the bodies and stems are aligned.
- Stem seal O-Rings should be lubricated from time to time.

Pressure–Temperature Ratings	
Coupled	***MAWP QC4** 3000 psig (206 bar) @ 70°F (21°C)
	***MAWP QC6** 1500 psig (103 bar) @ 70°F (21°C)
	***MAWP QC8** 750 psig (51.7 bar) @ 70°F (21°C)
	***MAWT** 400°F (204°C) @ 250 psig (17.2 bar)
Uncoupled and When Coupling and Uncoupling	***MAWP** 250 psig (17.2 bar) @ 70°F (21°C)

*MAWP - Maximum Allowable Working Pressure
*MAWT - Maximum Allowable Working Temperature

Note:
Uncoupled QC-LOK is rated up to 70°F (21°C)
Pressure & Temperature ratings are for stainless steel construction and Viton Seals

Spillage and Air Inclusion		
Size	**Spillage CM^3**	**Air Inclusion CM^3**
1/4"	0.3	0.3
3/8"	1.0	1.0
1/2"	3.0	3.0

Definitions:

Spillage: Volume of flowing media that will be released from the system while disconnecting the DESO (only) Quick Connector.

Air Inclusion: Volume of air that will be entered to the system while connecting the DESO (only) Quick Connector.

Maximum Flow Rate	
Size	Water Flow U.S. gal/min (L/min) at 70°F (20°C)
QC4	4 (15)
QC6	6 (22)
QC8	10 (37)

O–RINGS

Different materials are available for special applications

O–Ring Material	Temperature Raiting °F (°C)
Buna N	-35 to 250 (-37 to 121)
Ethylene Propylene (EPDM)	-70 to 250 (-57 to 121)
Viton (Fluorocarbon)	-15 to 400 (-26 to 204)
Neoprene	-35 to 225 (-37 to 107)
Perfluoroelastomer	-15 to 500 (-26 to 260)

Warning

- Always take notice of pressure rating restrictions that apply to coupling or uncoupling.
- SESO should not be uncoupled under pressure.
- QC–LOK should not be rotated while coupled.

QC4 SERIES ORDERING INFORMATION

OPTIONAL

QC4 - SS - B - L - 1/4 - [ ] - [ ]

Series
QC4- 1/4” Body
QC6- 3/8” Body
QC8- 1/2” Body

Material
SS - 316

Connector Type	
B	- Body
S	- SESO Stem
D	- DESO Stem

End Connection	
L	- LET-LOK® (Tube)
LB	- LET-LOK® Bulkhead
NB	- NPT Bulkhead
MN	- Male NPT
FN	- Female NPT
MG	- Male ISO Parallel
FG	- Female ISO Parallel
MR	- Male ISO Tapered
FR	- Female ISO Tapered
H	- Hose Connector
HL	- ONE-LOK®

Size	
1/8	**6MM**
1/4	**6MM**
3/8	**10MM**
1/2	**12MM**

DESO Stems can't be made with 1/8" ends

O – Ring	
BLANK	- Viton®
BU	- BUNA N
EP	- EPDM
NE	- Neoprene
KZ	- Perfluoroelastomer

Treatment	
OC	- Oxygen Clean
LF	- Lubricant Free

High–Flow Quick Connectors

The full-flow option contains a full flow body and a SESO stem.
To order a full flow body please select the relevant letters and “HF”.
Example: QC4-SS-B-FN-1/4-HF

BODY AND STEM PROTECTORS

Body & stem protectors prevent entry of contaminants & damages caused upon uncoupling of the bodies and stems. The protectors do not contain pressure.

STEM PROTECTOR	BODY PROTECTOR
QC4-SS-SP | QC6-SS-SP | QC8-SS-SP	QC4-SS-BP | QC6-SS-BP | QC8-SS-BP

Warning! For your safety

The system designer and user have the sole responsibility for selecting products suitable for their special application requirements, ensuring their safe and trouble-free installation, operation, and maintenance. Application details, material compatibility and product ratings should all be considered for each selected product. Improper selection, installation or use of products can cause property damage or personal injury.

Viton® - TM DuPont

ULTRA–CLEAN DIAPHRAGM VALVES

UCV® SERIES

HAM-LET®
ADVANCED CONTROL TECHNOLOGY

INDEX

COMPACT MODEL 338
2LE

FLOW CONTROL 339
2LM

STANDARD MODEL 340
2LD

3/4" HIGH-FLOW 341
2LDS12

LOW-PRESSURE MODEL 342
EV

GENERAL PURPOSE 343
EVZ

HIGH-PRESSURE 344
2LH

HIGH PRESSURE HIGH-FLOW 345
2LS

STANDARD METAL SEAT MODEL 346
3LD

HIGH TEMP. METAL SEAT 347
3LT

HIGH PRESSURE HIGH FLOW METAL SEAT 348
3LS

HP GRADE HIGH PRESSURE VALVE 349
EVH

DIAPHRAGM VALVES INTRODUCTION 354
HM & HMS

DIAPHRAGM AIR-OPERATED VALVES 355
HM

SURFACE-MOUNT SERIES 360
HMS

COMPACT SURFACE-MOUNT SERIES 361
HMSC

COST EFFICIENT ULTRA CLEAN METAL DIAPHRAGM VALVE 364
FOR GENERAL PURPOSE
HMC

AIR OPERATED, MANUAL OVERRIDE 365
HYBRID

ECONOMIC DIAPHARGM VALVE 366
HD

HIGH PRESURE DIAPHARGM VALVE 368
HP

MULTI PORT MONOBLOCK VALVE 371
HMB

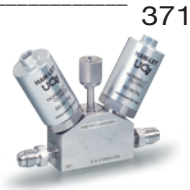

UCV MODEL SELECTION TABLE

Make the initial choice, taking the application parameters into account.

Pressure	Temperature	Gas	Seat Material	Cv	Valve Type	
					UHP Grade	HP Grade
Low-Pressure ≤ 2MPa 300 psi	-10~60°C (14~140°F)		PCTFE	~0.1	2LE 2LM	
				~0.3	2LD 2LC HM	EV ZD HD
				~0.7	2LD	EV ZD
				~2.5	2LDS12	
	-10~150°C (14~300°F)	Inert Gas	PI	~0.1	2LE 2LM	
				~0.3	2LD 2LC HM	EV
				~0.7	2LD	EV
				~0.3	HMS	
		Active Gas	METAL	~0.1	3LE	
				~0.3	3LD 3LN	
				~0.7	3LD	
	-10~250°C (14~480°F)		METAL	~0.7	3LT	
High-Pressure 2~21MPa (300~3060 psi)	-10~60°C (14~140°F)		PCTFE	~0.1	2LH	EVH
				~0.23	HP	
	-10~40°C (14~100°F)		PCTFE + 316L Stainless Steel	~0.3	2LS	
	-10~150°C (14~300°F)	Inert Gas	PI	~0.1	2LH	EVH
				~0.3	2LS	
		Active Gas	METAL	~0.1	3LH	
				~0.3	3LS	

(Maximum working pressure 16.2Mpa (2300 psi
(Option 21MPa (3060 psi
For EVH, 16.2Mpa (2300 psi) only

**HP - High Purity
*UHP - Ultra High Purity

BASIC UCV STRUCTURES, GRADES AND SPECIFICATIONS

- UCVs are metallic diaphragm-operated valves. The diaphragm is made of a Ni-Co Alloy.
- UCVs are available with the following valve structures to meet ultra-high purity (UHP) and high-purity (HP) grades:

A. All-metallic valves, the highest UHP grade.
These valves are designed to be the ultimate solution, with polymer materials eliminated from their gas contact areas. Ideally suited for use with high-reactivity gases and in applications requiring fast gas replacement. Also best suited for use as supply system valves for high-reactivity

B. Soft-seat valves, standard UHP grade/standard HP grade.
HAM-LET MOTOYAMA Japan's standard line of valves using PCTFE (polymonochlorotrifluoroethyle) in the standard valve seats. The seat holders minimize the dead volume on the seat bottom, designed for enhanced reliability.

C. Caulked-seat valves, general-purpose HP grade.
HP valves using PCFTE (polymonochlorotrifluoroethyle) seats. Minimized seat volumes ease the problems of outgassing and seat creeping in line with the traditional design philosophy of UCV's.

A. All-metallic valve

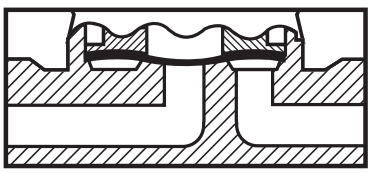

B. Soft-seat valve

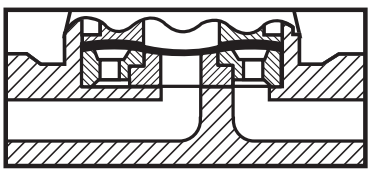

C. Caulked-seat valve

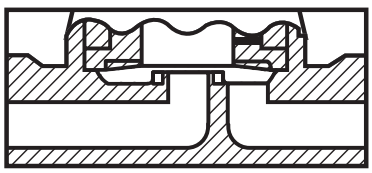

HIGHEST UHP** GRADE, 3L SERIES

Type	Size (inch)	Cv	Max. Working Pressure	Working Temp.	Application	Drive	Feature
3LD	1/4 - 1/2	0.25 - 0.7	1MPa/150psi	-10~150°c	On-Off	Manual and Pneumatic	Multiuse
3LS	1/4 - 1/2	0.23 - 0.25	16.2MPa/2300 psi OPTION 21MPa/3060 psi	-10~150°c	On-Off	Manual and Pneumatic	High-Pressure High Flow
3LT	1/2	0.7	1MPa/150 psi	-10~250°c	On-Off	Manual and Pneumatic	High-Temperature Use

STANDARD UHP** GRADE, 2L SERIES Polyimide(PI) seat is optionally selectable: working tmp.=-10 to 150°C

Type	Size (inch)	Cv	Max. Working Pressure	Working Temp.	Application	Drive	Feature
2LE	1/4	0.05 - 0.1	1MPa/150 psi	-10~60°c	On-Off	Manual and Pneumatic	Compact
2LM	1/4	0.05 - 0.1	1MPa/150 psi	-10~60°c	Flow Control	Graduated Manual	Compact
2LD	1/4 - 1/2, 3/4	0.3 - 0.7, 2.2	1MPa/150 psi	-10~60°c	On-Off	Manual and Pneumatic	Multiuse
2LH	1/4	0.05 - 0.1	16.2MPa/2300 psi OPTION 21MPa/3060 psi	-10~60°c	On-Off	Manual and Pneumatic	High-Pressure Use
3LS	1/4 - 1/2	0.23 - 0.25	16.2MPa/2300 psi OPTION 21MPa/3060 psi	-10~60°c	On-Off	Manual and Pneumatic	High-Pressure High Flow
HM	1/4	0.3	1MPa/150 psi & 2MPa/300 psi	-10~60°c	On-Off	Manual and Pneumatic	Multiuse
HMC	1/4	0.25	1MPa/150 psi	-10~60°c	On-Off	Manual and Pneumatic	Multiuse
HMS	1/4	0.3	1MPa/150 psi & 2MPa/300 psi	-10~60°c	On-Off	Manual and Pneumatic	Multiuse
HMSC	1/4	0.27	1MPa/150 psi	-10~60°c	On-Off	Pneumatic	Multiuse
2LN HB	1/4	0.3	1MPa/150 psi & 2MPa/300 psi	-10~60°c	On-Off	Manual and Pneumatic	Multiuse
HMB	1/4	0.3	1MPa/150 psi & 2MPa/300 psi	-10~60°c	On-Off	Manual and Pneumatic	Multiuse

STANDARD HP* GRADE, EV & EVZ SERIES Polyimide(PI) seat is optionally selectable: working tmp.=-10 to 150°C

Type	Size (inch)	Cv	Max. Working Pressure	Working Temp.	Application	Drive	Feature
EV	1/4 - 1/2	0.3 - 0.7	1MPa/150 psi	-10~60°c	On-Off	Manual and Pneumatic	Multiuse
EVH	1/4	0.1	16.2MPa/2300 psi	-10~60°c	On-Off	Manual and Pneumatic	High-Pressure Use
EVZ	1/4-1/2	0.27-0.65	1MPa/150 psi	-10~80°c	On-Off	Manual	Caulked Seat

NOTE: Choose your valve seat material from the Valve Seat Selection Table (p.280) in this catalog.
***HP** - High Purity
****UHP** - Ultra High Purity

2LE SERIES
COMPACT MODEL

Metal Diaphragm Valves
Compact models from the Ultra Clean Valve series are made to UHP specifications.
These models come with connection joints in 1/4", as standard.
These valves fit into applications to which a minimum footprint is required.

- Compact designs for minimum footprint.
- A large choice of fluid-specific seat materials is available as an option.

For details, please contact one of our field representatives.

STANDARD CONFIGURATION DIMENSIONS

Part Number/ep	Size	End Connection	A	B	C	D	E	F	G	I	J	K	L	M
2LES4Q-W	1/4	Extended Butt Weld	11	(52)	30	24.5	(4)	17	47			17	M5	
2LEA4R-BV	1/4	Male HTC®	11	(54)	30	24.5	(4)	17		26	45	17	M5	
2LES4C-FV	1/4	Swivel Female HTC®	11	(54)	32				66			17	M5	Rc1/8

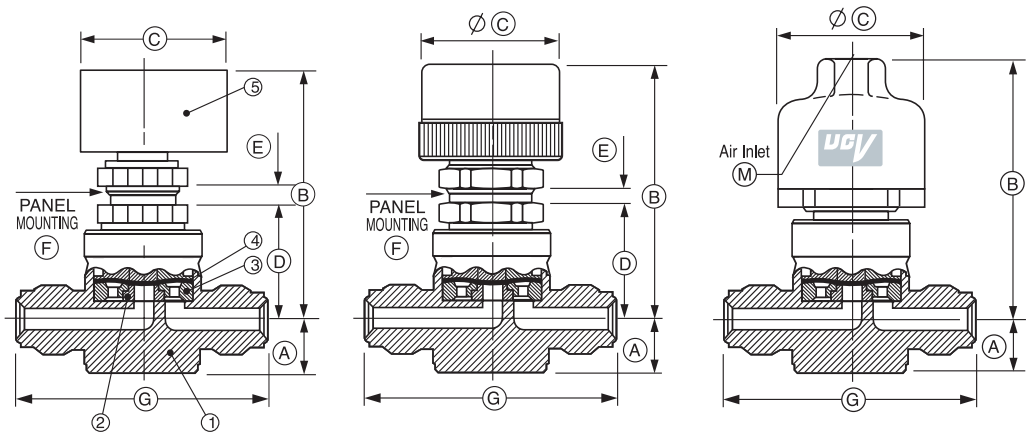

SPECIFICATIONS

Size	Pressure	Temp.	Cv	Leak Rates	
				Inboard	Across Seat
1/4	1MPa (150 psi)	-10 to 60°c (PCTFE) -10 to 150°c (PI)	0.1	$3X10^{-12}$ pa•m³/sec Helium	$3X10^{-10}$ pa•m³/sec Helium

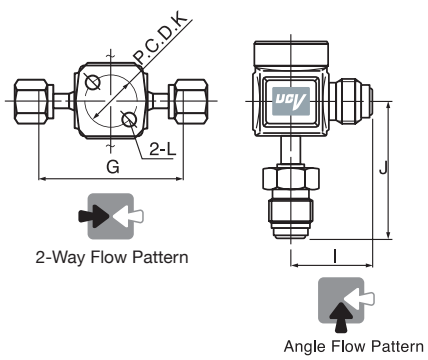

STRUCTURE

	Parts	Material
1	Body	316L Stainless Steel
2	Seat	PCTFE/PI (Vespel®)
3	Seat Holder	316L Stainless Steel
4	Diaphragm	Elgiloy
5	Handle/Act	Aluminum

Warning! For your safety

The system designer and user have the sole responsibility for selecting products suitable for their special application requirements, ensuring their safe and trouble-free installation, operation, and maintenance. Application details, material compatibility and product ratings should all be considered for each selected product. Improper selection, installation or use of products can cause property damage or personal injury.

ORDERING INFORMATION

For ordering, see page 350

2LM SERIES
FLOW CONTROL

Metal Diaphragm Valves

Flow control models from the Ultra-Clean Valve Series are made to UHP specifications. These models come with connection joints in 1/4", as standard. Each valve is furnished with a handle-lock set screw with a vernier scale.

- Broad flow-control range of six and a half turns of the handle.
- A handle-lock set screw on the handle side.

As these valves are designed to handle flow control tasks, valve seat is not fully closed even at the position of division 0 on the vernier scale. Do not operate the handle in the direction in which the valve seat is closed past the position of division 0 on the vernier scale.

STANDARD CONFIGURATION DIMENSIONS

Part Number/ep	Size	End Connection	A	B	C	D	E	F	G	I	J	K	L
2LMS4V-W	1/4	Extended Butt Weld	11	(98)	23	26	(2.5)	20	47			17	M5
2LMS4V-BW	1/4	Short Butt Weld	11	(98)	23	26	(2.5)	20	44.4			17	M5
2LMA4V-BV	1/4	Male HTC®	11	(98)	23	26	(2.5)	20		26	45	17	M5
2LMS4V-FV	1/4	Swivel Female HTC®	11	(98)	23	26	(2.5)	20	66			17	M5

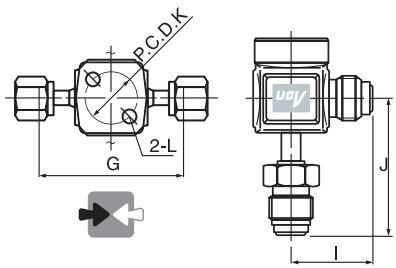

2-Way Flow Pattern

Angle Flow Pattern

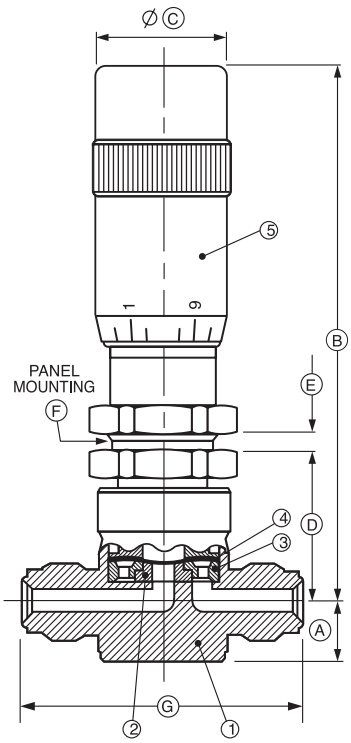

SPECIFICATIONS

Size	Pressure	Temp.	Cv	Leak Rates	
				Inboard	Across Seat
1/4	1MPa (150 psi)	-10 to 60°c (PCTFE) -10 to 150°c (PI)	0.1	$3X10^{-12}$ pa•m³/sec Helium	X

STRUCTURE

	Parts	Material
1	Body	316L Stainless Steel
2	Seat	PCTFE/PI (Vespel®)
3	Seat Holder	316L Stainless Steel
4	Diaphragm	Elgiloy
5	Handle/Act	Aluminum

ORDERING INFORMATION

For ordering, see page 350

Warning! For your safety

The system designer and user have the sole responsibility for selecting products suitable for their special application requirements, ensuring their safe and trouble-free installation, operation, and maintenance. Application details, material compatibility and product ratings should all be considered for each selected product. Improper selection, installation or use of products can cause property damage or personal injury.

2LD SERIES
STANDARD MODEL

Metal Diaphragm Valves

Standard models from the Ultra-Clean Valve Series are made to UHP specifications.
This model comes with connection joints in three sizes 1/4", 3/8" & 1/2" as standard.
This valve comfortably fits into high-flow applications.

- Unique seat structure offers superb leak performance.
- Compact designs for a minimum foot print.

STANDARD CONFIGURATION DIMENSIONS

Part Number/ep	Size	End Connection	A	B	C	D	E	F	G	H	I	J	K	M	L
2LDA4R-BV	1/4	Male HTC®	11	(63)	45	29	(4)	23	58	25	29	45	25		M5
2LDT4C-FV	1/4	Female HTC®	11	(65)	46				70.6	35.3			25	Rc1/8	M5
2LDS4C-W	1/4	Extended Butt Weld	11	(65)	46				89				25	Rc1/8	M5
2LDS4C-BW	1/4	Short Butt Weld	11	(65)	46				44.4				25	Rc1/8	M5
2LDS6R-W	3/8	Extended Butt Weld	17.5	(67.5)	45	32.5	(4)	23	105	38			28		M5
2LDT8R-BV	1/2	Male HTC®	17.5	(67.5)	45	32.5	(4)	23	76				28		M5
2LDS8C-FV	1/2	Female HTC®	17.5	(73.5)	56				100				28	Rc1/8	M5
2LDS8C-W	1/2	Extended Butt Weld	17.5	(73.5)	56				105				28	Rc1/8	M5

SPECIFICATIONS

Size	Pressure	Temp.	Cv	Leak Rates Inboard	Leak Rates Across Seat
1/4	1MPa (150 psi)	-10 to 60°c (PCTFE) -10 to 150°c (PI)	0.3	$3X10^{-12}$ pa•m³/sec Helium	$3X10^{-10}$ pa•m³/sec Helium
3/8			0.7		
1/2			0.7		

STRUCTURE

	Parts	Material
1	Body	316L Stainless Steel
2	Seat	PCTFE/PI (Vespel®)
3	Seat Holder	316L Stainless Steel
4	Diaphragm	Elgiloy
5	Handle/Act	Aluminum

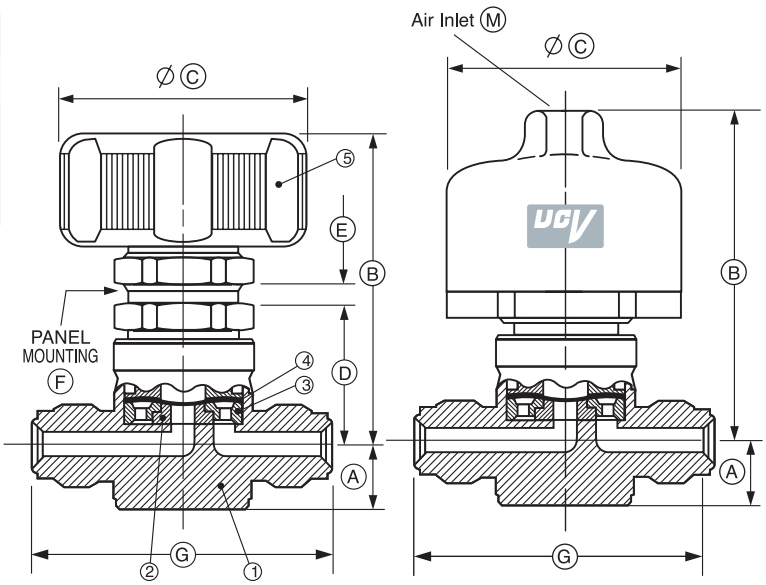

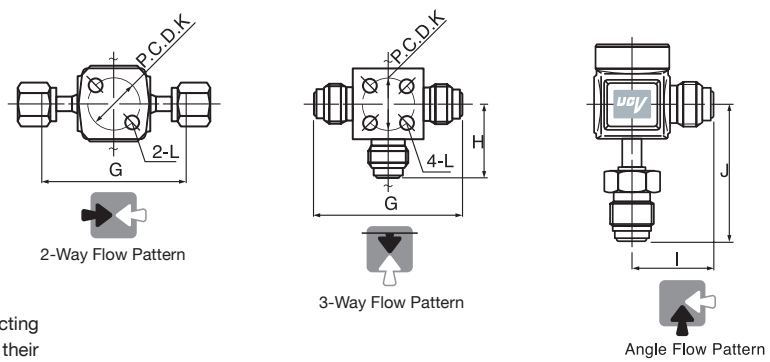

ORDERING INFORMATION

For ordering, see page 350

Warning! For your safety

The system designer and user have the sole responsibility for selecting products suitable for their special application requirements, ensuring their safe and trouble-free installation, operation, and maintenance. Application details, material compatibility and product ratings should all be considered for each selected product. Improper selection, installation or use of products can cause property damage or personal injury.

2LDS12 SERIES
3/4'' HIGH-FLOW

Metal Diaphragm Valves

Standard models from the Ultra-Clean Valve Series are made to UHP specifications. This model comes with connection joints in 3/4" as standard. This valve comfortably fits into high-flow applications.

- Unique seat structure offers superb leak performance.
- Compact designs for minimum foot print.

STANDARD CONFIGURATION DIMENSIONS

Part Number/ep	Size	End Connection	A	B	C	D	E	F	G	H	I
2LDS12R-BV	3/4	Male HTC®	23	109	45	86	97	46	45	35	
2LDS12R-FV	3/4	Swivel Female HTC®	23	109	45	86	146	46	45	35	
2LDS12R-W	3/4	Extended Butt Weld	23	109	45	86	146	46	45	35	
2LDS12C-BV	3/4	Male HTC®	23	118	56	95	97	46	45	35	Rc 1/8
2LDS12C-FV	3/4	Swivel Female HTC®	23	118	56	95	146	46	45	35	Rc 1/8
2LDS12C-W	3/4	Extended Butt Weld	23	118	56	95	146	46	45	35	Rc 1/8

SPECIFICATIONS

Size	Pressure	Temp.	Cv	Leak Rates	
				Inboard	Across Seat
3/4	1MPa (150 psi)	-10 to 60°c	2.2	$3X10^{-12}$ pa•m³/sec Helium	$3X10^{-9}$ pa•m³/sec Helium

STRUCTURE

	Parts	Material
1	Body	316L Stainless Steel
2	Seat	PCTFE/PI (Vespel®)
3	Diaphragm	Elgiloy
4	Handle/Act	Aluminum

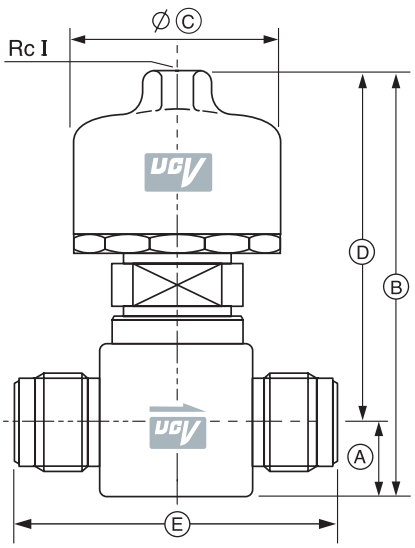

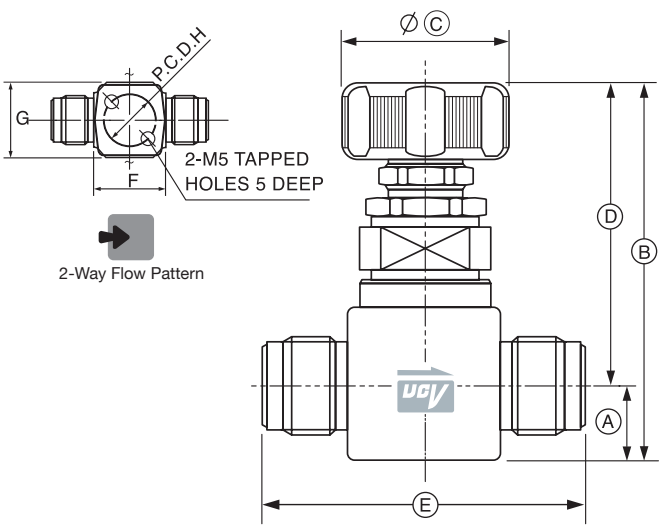

ORDERING INFORMATION

For ordering, see page 350

Warning! For your safety

The system designer and user have the sole responsibility for selecting products suitable for their special application requirements, ensuring their safe and trouble-free installation, operation, and maintenance. Application details, material compatibility and product ratings should all be considered for each selected product. Improper selection, installation or use of products can cause property damage or personal injury.

EV SERIES
LOW-PRESSURE MODEL

Metal Diaphragm Valves

The EV Series is a family of standard models from the Ultra Clean Valve Series, which are made to HP specifications. These models come with connection joints in three sizes, 1/4", 3/8" and 1/2", as standard. These valves implement the traditional UCV 2LD Series design concept of high reliability.

- Surface roughness of the gas contact area held to Ry ≤2.5 micro meter as standard.
- Operable over a wide range of flow rates up to 1 MPa/150 psi.

STANDARD CONFIGURATION DIMENSIONS

Part Number/ep	Size	End Connection	A	B	C	D	E	F	G
EV4-I	1/4	LET-LOK®	11	(63)	45	(63.5)	25	M5	
EV4C-FV	1/4	Swivel Female HTC®	11	(65)	46	70.6	25	M5	Rc1/8
EV4-BV	1/4	Male HTC®	11	(63)	45	58	25	M5	
EV6-I	3/8	LET-LOK®	17.5	(67.5)	45	(79.4)	28	M5	
EV8-I	1/2	LET-LOK®	17.5	(67.5)	45	(86)	28	M5	
EV8C-FV	1/2	Swivel Female HTC®	17.5	(73.5)	56	100	28	M5	Rc1/8
EV8-BV	1/2	Male HTC	17.5	(67.5)	45	76	28	M5	

SPECIFICATIONS

Size	Pressure	Temp.	Cv	Leak Rates Inboard	Leak Rates Across Seat
1/4	1MPa (150 psi)	-10 to 60°c	0.3	3 X 10^{-12} Pa m3/sec Helium	3 X 10^{-10} Pa m3/sec Helium
3/8			0.7		
1/2			0.7		

STRUCTURE

	Parts	Material
1	Body	316L Stainless Steel
2	Seat	PCTFE/PI (Vespel®)
3	Seat Holder	316L Stainless Steel
4	Diaphragm	Elgiloy
5	Handle/Act	Aluminum

ORDERING INFORMATION

For ordering, see page 350

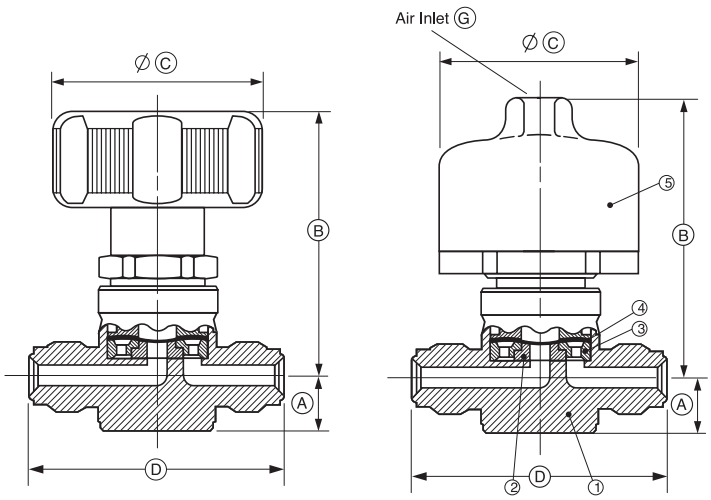

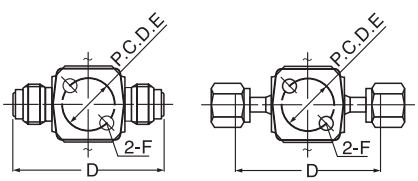

2-Way Flow Pattern

Warning! For your safety

The system designer and user have the sole responsibility for selecting products suitable for their special application requirements, ensuring their safe and trouble-free installation, operation, and maintenance. Application details, material compatibility and product ratings should all be considered for each selected product. Improper selection, installation or use of products can cause property damage or personal injury.

EVZ SERIES
GENERAL PURPOSE

Metal Diaphragm Valves

Economic implementations of Ultra-Clean Valves follow the traditions of HMJ UCV technologies

- Available in sizes from 1/4" to 1/2" to support a wide range of connections.
- Standard with a 270-degree rotary handle with an open/close indicator.
- Over 20,000 open/close cycles.
- Electropolished item standard (LET-LOK® joint unpolished).
- Aluminum handle for compact, lightweight geometry.

The open/close indicator works on a follow-up basis. When opening or closing the valve, operate the handle until the handle hits the stopper.

PART NUMBER / DIMENSIONS

Part Number/ep	Size	End Connection	A	B	C	D	E	F
EVZS4R-BV	1/4	Male HTC®	11	(53)	45	58	25	M5
EVZS4R-FV	1/4	Swivel Female HTC®	11	(53)	45	70.6	25	M5
EVZS4R-I	1/4	LET-LOK®	11	(53)	45	(63.5)	25	M5
EVZS6R-I	3/8	LET-LOK®	17.5	(58)	45	(79.5)	28	M5
EVZS4R-BV	1/2	Male HTC®	17.5	(58)	45	76	28	M5
EVZS8R-FV	1/2	Swivel Female HTC®	17.5	(58)	45	100	28	M5
EVZS8R-I	1/2	LET-LOK®	17.5	(58)	45	(86)	28	M5

SPECIFICATIONS

Size	Pressure	Temp.	Cv	Leak Rates	
				Inboard	Across Seat
1/4	1MPa (150 psi)	-10 to 80°c	0.27	$3X10^{-12}$ pa•m³/sec Helium	$3X10^{-10}$ pa•m³/sec Helium
3/8			0.65		
1/2					

STRUCTURE

	Parts	Material
1	Body	316L Stainless Steel
2	Seat	PCTFE
3	Diaphragm	Elgiloy
4	Bonnet	303 Stainless Steel
5	Handle/Act	Aluminum

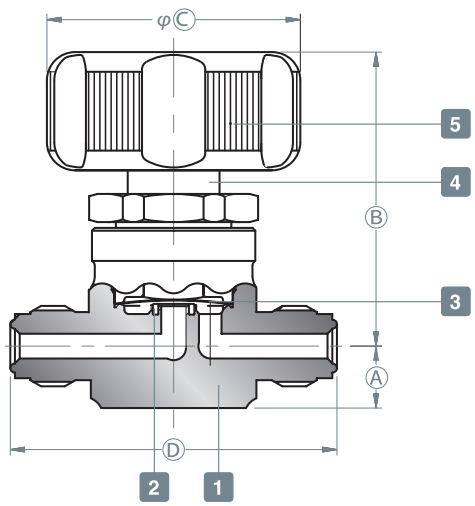

ORDERING INFORMATION

For ordering, see page 350

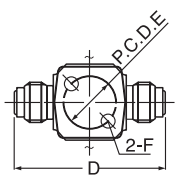

2-Way Flow Pattern

Warning! For your safety

The system designer and user have the sole responsibility for selecting products suitable for their special application requirements, ensuring their safe and trouble-free installation, operation, and maintenance. Application details, material compatibility and product ratings should all be considered for each selected product. Improper selection, installation or use of products can cause property damage or personal injury.

2LH SERIES
HIGH-PRESSURE

Metal Diaphragm Valves

High-pressure standard models from the Ultra-Clean Valve Series are made to UHP specifications. These models come with connection joints in 1/4", as standard. Features include a compact drive geometry and a highly reliable seat structure.

- Can be used as shutoff valves for high-pressure fluids at up to 16.2 MPa/2300 psi.
- Compact designs for minimum footprint.
- A large choice of fluid-specific seat materials available as options.
- Optionally ready for 21 MPa/3060 psi.

For more information, please contact one of our field representatives.

STANDARD CONFIGURATION DIMENSIONS

Part Number/ep	Size	End Connection	A	B	C	D	F	G	H	I	J	L
2LHS4R-W	1/4	Extended Butt Weld	11	(68)	45	47			17	M5		(2.5)
2LHS4R-BW	1/4	Short Butt Weld	11	(68)	45	44.4			17	M5		(2.5)
2LHA4R-BV	1/4	Male HTC®	11	(68)	45				17	M5		(2.5)
2LHS4C-FV	1/4	Swivel Female HTC®	11	(85)	40	66	26	45	17	M5	Rc1/8	

SPECIFICATIONS

Size	Pressure	Temp.	Cv	Leak Rates	
				Inboard	Across Seat
1/4	16.2MPa (2300 psi) OPTION: 21MPa/3060 psi	-10 to 60°c (PCTFE) -10 to 150°c (PI)	0.1	$3X10^{-12}$ pa•m³/sec Helium	$3X10^{-10}$ pa•m³/sec Helium

STRUCTURE

	Parts	Material
1	Body	316L Stainless Steel
2	Seat	PCTFE/PI (Vespel®)
3	Seat Holder	316L Stainless Steel
4	Diaphragm	Elgiloy
5	Handle/Act	Aluminum

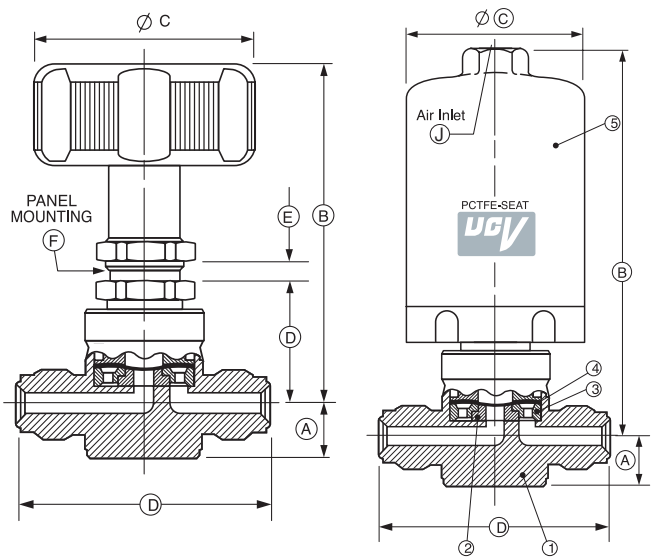

ORDERING INFORMATION

For ordering, see page 350

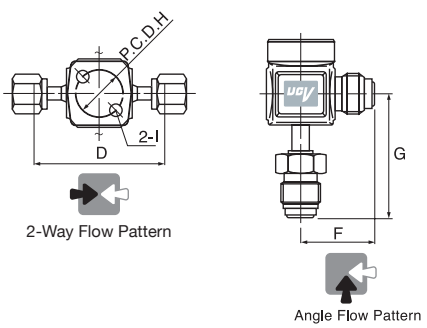

Warning! For your safety

The system designer and user have the sole responsibility for selecting products suitable for their special application requirements, ensuring their safe and trouble-free installation, operation, and maintenance. Application details, material compatibility and product ratings should all be considered for each selected product. Improper selection, installation or use of products can cause property damage or personal injury.

2LS SERIES

HIGH-PRESSURE - HIGH-FLOW

Metal Diaphragm Valves

High-pressure high-flow models from the Ultra-Clean Valve Series are made to UHP specifications. These models come with connection joints in two alternative sizes, 1/4" and 1/2", as standard. With their compact designs, these valves comfortably fit into high-pressure high-flow applications.

- Can be used as shutoff valves for high-pressure fluids at up to 21 MPa/3060 psi.
- A large choice of fluid-specific seat materials is available as an option.

For more information please contact one of our field representatives.

STANDARD CONFIGURATION DIMENSIONS

Part Number/ep	Size	End Connection	A	B	C	D	E	H	I	J
2LST4R-W	1/4	Extended Butt Weld	11	(71)	45	89	44.5	25	M5	
2LSS4C-BW	1/4	Short Butt Weld	11	(89)	40	44.4		25	M5	Rc1/8
2LSS4C-FV	1/4	Swivel Female HTC®	11	(89)	40	70.6		25	M5	Rc1/8
2LST8R-BV	1/2	Male HTC®	17.5	(74)	45	76	38	28	M5	
2LSS8C-W	1/2	Extended Butt Weld	17.5	(92.5)	40	105		28	M5	Rc1/8
2LSS8C-BW	1/2	Short Butt Weld	17.5	(92.5)	40	55		28	M5	Rc1/8

SPECIFICATIONS

Size	Pressure	Temp.	Cv	Leak Rates Inboard	Leak Rates Across Seat
1/4	21MPa / 3060 psi	-10 to 40°c	0.25	$3X10^{-12}$ pa•m³/sec Helium	$3X10^{-10}$ pa•m³/sec Helium
1/2			0.27		

STRUCTURE

	Parts	Material
1	Body	316L Stainless Steel
2	Seat	PCTFE/PI (Vespel®)
3	Seat Holder	316L Stainless Steel
4	Diaphragm	Elgiloy
5	Handle/Act	Aluminum

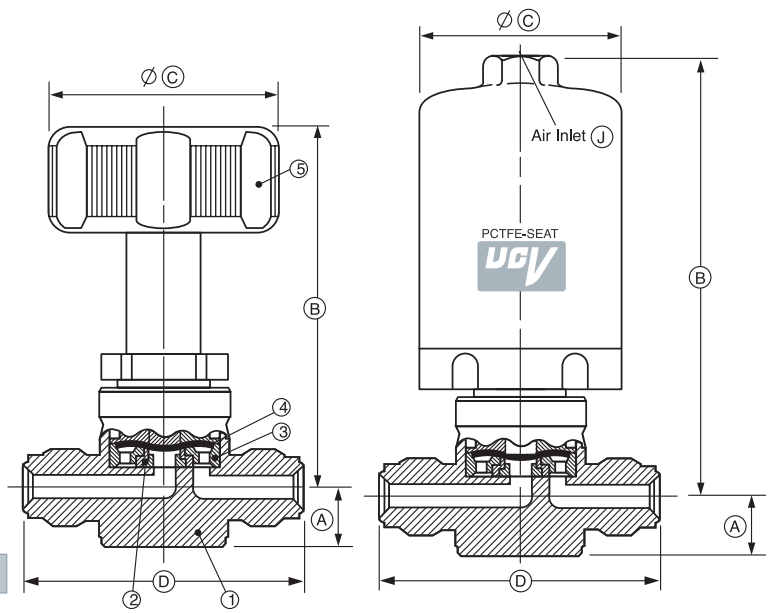

ORDERING INFORMATION

For ordering, see page 350

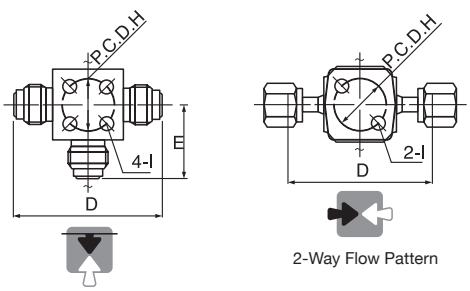

3-Way Flow Pattern

2-Way Flow Pattern

Warning! For your safety

The system designer and user have the sole responsibility for selecting products suitable for their special application requirements, ensuring their safe and trouble-free installation, operation, and maintenance. Application details, material compatibility and product ratings should all be considered for each selected product. Improper selection, installation or use of products can cause property damage or personal injury.

3LD

STANDARD METAL SEAT MODEL

Metal Diaphragm Valves

Standard models from the Ultra-Clean Valve Series are made to UHP specifications.

The ultimate in metallic diaphragm-operated valves with resins completely removed from their gas contact areas. Available in connection joint sizes of 1/4", 3/8" and 1/2", as standard.

- High-speed replacement of media in a gas or liquid state.
- Extensive records of proven performance on corrosive gases (such as HCl and F2).
- Designs can be customized to meet specific needs.

STANDARD CONFIGURATION DIMENSIONS

Part Number/ep	Size	End Connection	A	B	C	D	E	F	G	H	I	J	k
3LDS4R-BV	1/4	Male HTC®	11	(63)	45	29	(4)	23	58	25		M5	
3LDT4C-FV	1/4	Swivel Female HTC®	11	(89)	34				70.6	25	35.3	M5	Rc1/8
3LDS4C-W	1/4	Extended Butt Weld	11	(89)	34				89	25		M5	Rc1/8
3LDS4C-BW	1/4	Short Butt Weld	11	(89)	34				44.4	25		M5	Rc1/8
3LDS6R-W	3/8	Extended Butt Weld	17.5	(67.5)	45	32.5	(4)	23	105	28	38	M5	
3LDT8R-BV	1/2	Male HTC®	17.5	(67.5)	45	32.5	(4)	23	76	28		M5	
3LDS8C-FV	1/2	Swivel Female HTC®	17.5	(92.5)	40				100	28		M5	Rc1/8
3LDS8C-W	1/2	Extended Butt Weld	17.5	(92.5)	40				105	28		M5	Rc1/8

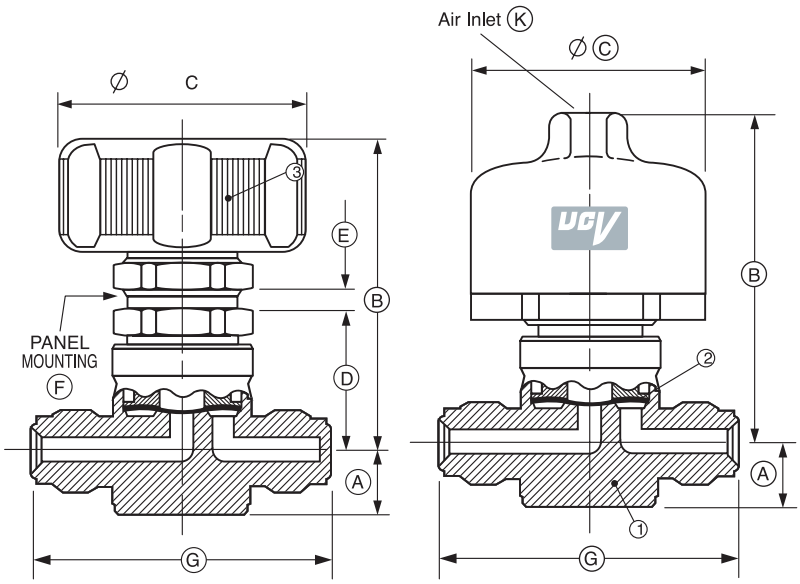

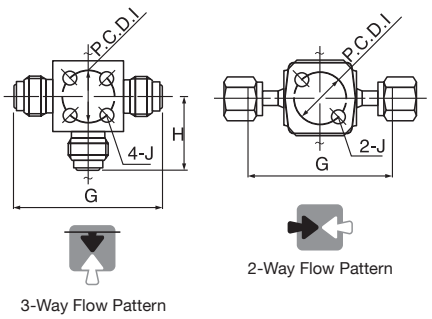

STRUCTURE

	Parts	Material
1	Body	316L Stainless Steel
2	Diaphragm	Elgiloy
3	Handle/Act	Aluminum

SPECIFICATIONS

Size	Pressure	Temp.	Cv	Leak Rates Inboard	Leak Rates Across Seat
1/4	1MPa (150 psi)	-10 to150°c	0.3	$3X10^{-12}$ pa•m³/sec Helium	$2X10^{-8}$ pa•m³/sec Helium
3/8			0.7		
1/2			0.7		

ORDERING INFORMATION

For ordering, see page 350

Warning! For your safety

The system designer and user have the sole responsibility for selecting products suitable for their special application requirements, ensuring their safe and trouble-free installation, operation, and maintenance. Application details, material compatibility and product ratings should all be considered for each selected product. Improper selection, installation or use of products can cause property damage or personal injury.

3LT SERIES

HIGH-TEMPERATURE METAL SEAT

Metal Diaphragm Valves

The highest-ranking grade of high-temperature models from the Ultra-Clean Valve Series are made to UHP specifications. The ultimate in metallic diaphragm-operated valves with resins completely removed from their gas-contact areas. These valves can be used at temperatures up to 250°C.

■ Best suited for use as MOCVD changeover valves.

STANDARD CONFIGURATION DIMENSIONS

Part Number/ep	Size	End Connection	A	B	C	D	E	F	G	H	I	J	k	L
3LTS8D-BV-1	1/2	Male HTC®	17.5	(67.5)	45	32.5	(4)	23	76		28		M5	LET-LOK® 1/8
3LTT8C-FV-1	1/2	Swivel Female HTC®	17.5	(92.3)	40				100	50	28	29.2	M5	LET-LOK® 1/8
3LTS8C-W-2	1/2	Extended Butt Weld	17.5	(92.3)	40				105		28	29.2	M5	Rc1/8
3LTS8C-BW-2	1/2	Short Butt Weld	17.5	(92.3)	40				55		28	29.2	M5	Rc1/8

SPECIFICATIONS

Size	Pressure	Temp.	Cv	Leak Rates	
				Inboard	Across Seat
1/2	1MPa (150 psi)	-10 to 250°c	0.7	$3X10^{-12}$ pa•m³/sec Helium	$2X10^{-6}$ pa•m³/sec Helium

STRUCTURE

	Parts	Material
1	Body	316L Stainless Steel
2	Diaphragm	Elgiloy
3	Handle/Act	Aluminum

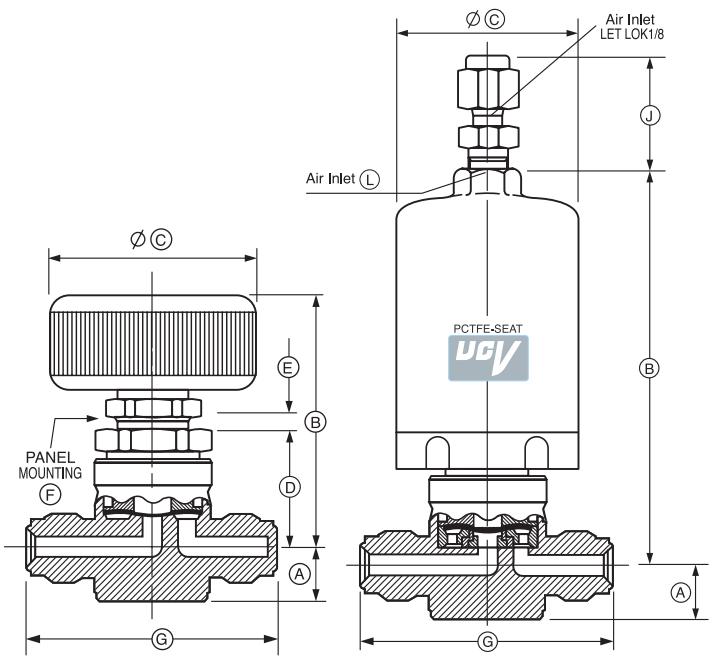

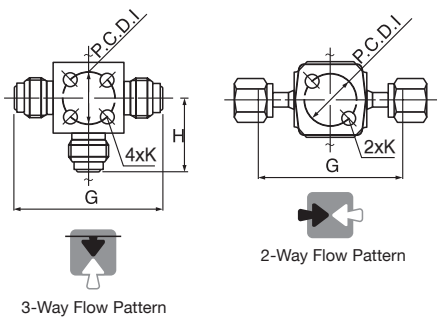

ORDERING INFORMATION

For ordering, see page 350

Warning! For your safety

The system designer and user have the sole responsibility for selecting products suitable for their special application requirements, ensuring their safe and trouble-free installation, operation, and maintenance. Application details, material compatibility and product ratings should all be considered for each selected product. Improper selection, installation or use of products can cause property damage or personal injury.

3LS SERIES

HIGH-PRESSURE-HIGH-FLOW METAL SEAT

Metal Diaphragm Valves

The highest-ranking grade of high-pressure-high-flow models from the Ultra-Clean Valve Series are made to UHP specifications. The ultimate in metallic diaphragm-operated valves with resins completely removed from their gas-contact areas. With their compact designs, these valves comfortably fit into high-pressure high-flow applications.

- Can be used as shutoff valves for high-pressure fluids at up to 21 MPa/3060 psi.
- Compact designs for minimum footprint.
- Extensive records of proven performance on corrosive gases (such as HCl and F2).

For more information please contact one of our field representatives.

STANDARD CONFIGURATION DIMENSIONS

Part Number/ep	Size	End Connection	A	B	C	D	E	F	G	H
3LSS4R-W	1/4	Extended Butt Weld	11	(71)	45	89		25	M5	
3LSS4R-BW	1/4	Butt Weld	11	(71)	45	44.4		25	M5	
3LST4R-BV	1/4	Male HTC®	11	(71)	45	58	29	25	M5	
3LSS4C-FV	1/4	Swivel Female HTC®	11	(89)	40	70.6		25	M5	Rc1/8
3LST8R-BV	1/2	Male HTC®	17.5	(74)	45	76	38	28	M5	
3LSS8C-W	1/2	Extended Butt Weld	17.5	(92.5)	40	105		28	M5	Rc1/8
3LSS8C-BW	1/2	Short Butt Weld	17.5	(92.5)	40	55		28	M5	Rc1/8

SPECIFICATIONS

Size	Pressure	Temp.	Cv	Leak Rates	
				Inboard	Across Seat
1/4	21MPa / 3060 psi	-10 to 150°c	0.25	3×10^{-12} Pa m^3/sec Helium	7×10^{-10} Pa m^3/sec Helium
1/2			0.27		

STRUCTURE

	Parts	Material
1	Body	316L Stainless Steel
2	Diaphragm	Elgiloy
3	Handle/Act	Aluminum

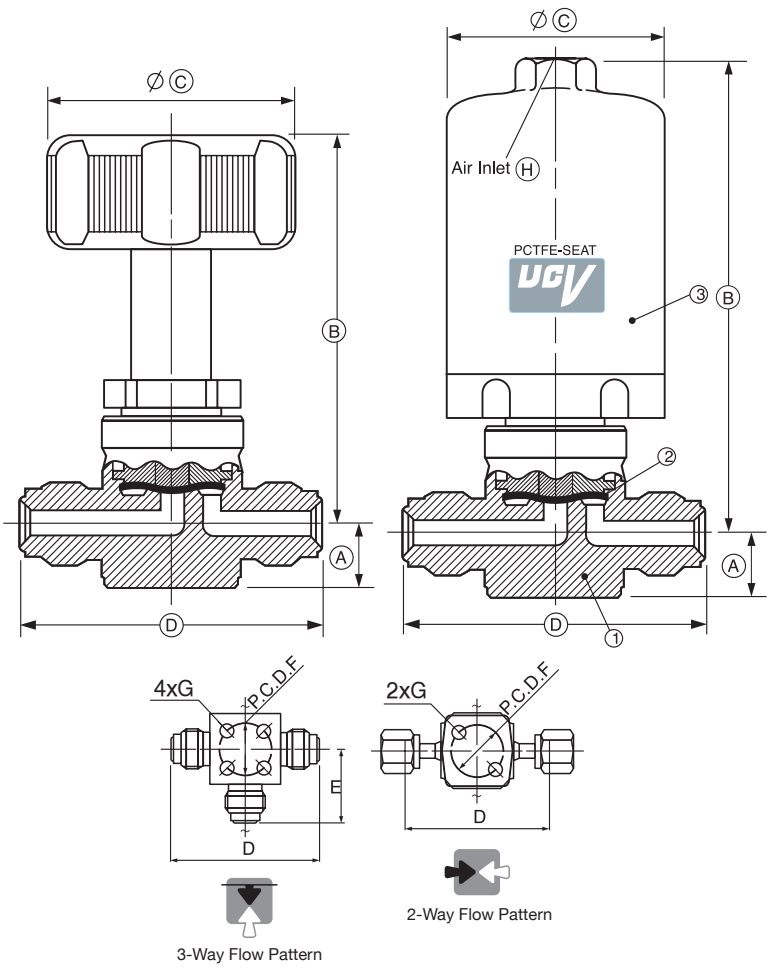

ORDERING INFORMATION

For ordering, see page 350

Warning! For your safety

The system designer and user have the sole responsibility for selecting products suitable for their special application requirements, ensuring their safe and trouble-free installation, operation, and maintenance. Application details, material compatibility and product ratings should all be considered for each selected product. Improper selection, installation or use of products can cause property damage or personal injury.

EVH SERIES

HP-GRADE, HIGH-PRESSURE VALVE

Metal Diaphragm Valves

High-pressure standard models from the Ultra-Clean Valve Series are made to HP specifications. Features include a 2LH-like compact drive geometry and a highly reliable seat structure.

- Can be used as shutoff valves for high-pressure fluids at up to 16.2 MPa/2300 psi.
- Compact designs for minimum footprint.

STANDARD CONFIGURATION DIMENSIONS

Part Number/ep	Size	End Connection	A	B	C	D	E	F	G	H	I	J
EVH4-I	1/4	LET-LOK®	11	(68)	45	25	(2.5)	17	(63.5)	17	M5	
EVH4-BV	1/4	Male HTC®	11	(68)	45	25	(2.5)	17	52	17	M5	
HVH4C-FV	1/4	Swivel Female HTC®	11	(85)	40				66	17	M5	Rc1/8

SPECIFICATIONS

Size	Pressure	Temp.	Cv	Leak Rates	
				Inboard	Across Seat
1/4	16.2MPa 2300 (psi)	-10 to 60°c	0.1	3×10^{-12} Pa m³/sec Helium	3×10^{-10} Pa m³/sec Helium

STRUCTURE

	Parts	Material
1	Body	316L Stainless Steel
2	Seat	PCTFE/PI (Vespel®)
3	Seat Holder	316L Stainless Steel
4	Diaphragm	Elgiloy
5	Handle	Aluminum

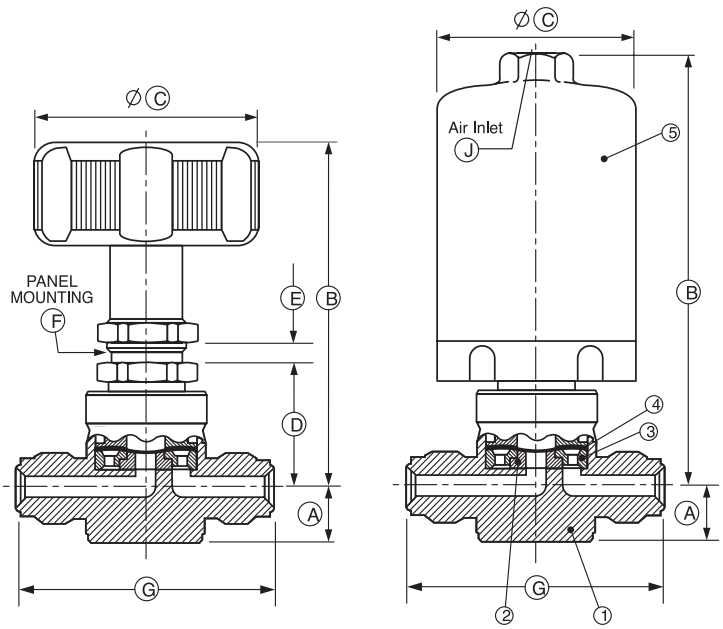

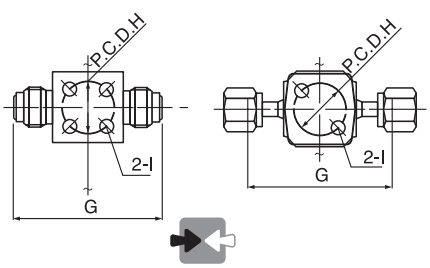

2-Way Flow Pattern

ORDERING INFORMATION

For ordering, see page 350

Warning! For your safety

The system designer and user have the sole responsibility for selecting products suitable for their special application requirements, ensuring their safe and trouble-free installation, operation, and maintenance. Application details, material compatibility and product ratings should all be considered for each selected product. Improper selection, installation or use of products can cause property damage or personal injury.

ORDERING INFORMATION

2LD T - 4 - C - BV - B - PI

Valve Series

2LE	- Compact
2LM	- Flow Control
2LD	- Standard
2LDS12	- 3/4'' High Flow
EV	- Low Pressure
EVZ	- Economy General Purpose
2LH	- High Pressure 2300 psi
2LS	- High Pressure High flow 3060psi
3LD	- Standard Metal Seat
3LT	- High Temp. Metal Seat
3LS	- High Pressure High Flow Metal Seat
EVH	- HP Grade High Pressure Valve

Valve Type

S	- 2-Port Valve (Straight)
A	- 2-Port Valve (Angle)
T	- 3-Port Valve (Straight)

Body Size

4	- 1/4"
6	- 3/8"
8	- 1/2"
12	- 3/4"

End Connection

BV	- Male Face Seal
MV	- Swivel Male Face Seal
FV	- Swivel Female Face Seal
W	- Extended Butt Welld
BW	- Short Butt Welld
BI	- LET-LOK®

Actuation Device

C	- Air Operated N.C	**Q**	- Oval Handle 1/4 turn
O	- Air Operated N.O	**T**	- Toggle Handle
R	- Round Handle	**V**	- Vernier Handle

Blue Handle is standard. For other colors contact your local Ham-Let representative.

Feature

PI	- Vespel

Port Designator

(A-F) for 3-Way Valve

PORT DESIGNATOR

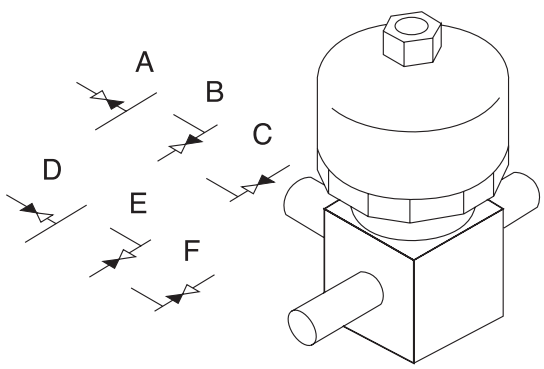

- All 2L & 3L series are made of forged SS316L.
- Standad seat: PCTFE.
- **For valves that are made of bar stock, see Ordering Information page 359 & 362**

Warning! For your safety

The system designer and user have the sole responsibility for selecting products suitable for their special application requirements, ensuring their safe and trouble-free installation, operation, and maintenance. Application details, material compatibility and product ratings should all be considered for each selected product. Improper selection, installation or use of products can cause property damage or personal injury.

SEAT MATERIAL SELECTION

Gas	Molecular Formula	State*	Seat Materials** Diaphragm Valve		
			PCTFE	Pi	Metal
AMMONIA	NH_3	L.G	◎	△	◎
ARGON	Ar	G	[◎]	[◎]	[◎]
ARSINE	ASH_3	C.G	[◎]	[◎]	[◎]
BORON TRICHLORIDE	BCl_3	L.G	○	△	◎
BORON TRICHLORIDE	BF_3	C.G	○	△	◎
CHLORINE	Cl_3	L.G	○	X	◎
DIBORANE	B_2H_6	C.G	○	○	◎
DICHLORO SILANE	SiH_2Cl_2	L.G	○	△	◎
DISILANE	Si_2H_6	G	○	○	◎
DI-CHLORO DI-FLUORO METHANE	CCl_2F_2	L.G	[◎]	[△]	[◎]
MONO-CHLORO TRI-FLUORO METHANE	$CClF_3$	L.G	[◎]	[△]	[◎]
TETRA FLUORO METHANE	CF_4	G	[◎]	[◎]	[◎]
TRI FLUORO METHANE	CHF_3	L.G	[◎]	[◎]	[◎]
HEXA-FLUORO METHANE	C_2F_4	L.G	[◎]	[◎]	[◎]
HELIUM	He	G	[◎]	[◎]	[◎]
HYDROGEN	H_2	G	[◎]	[◎]	[◎]
HYDROGEN BROMIDE	HBr	C.G	△	[X]	◎
HYDROGEN CHLORIDE	HCl	L.G	○	X	◎
HYDROGEN SULFIDE	H_2S	L.G	○	X	◎
NITOROGEN	N_2	G	[◎]	[◎]	[◎]
NITOROGEN TRIFLUORIE	NF_3	G	[◎]	[◎]	[◎]
NITOROGEN OXIDE	N_2O	L.G	△	○	◎
OXIGEN	O_2	G	[◎]	[◎]	[◎]
PHOSPHINE	PH_3:PURE PH_3:MIX	G	○	○	◎
SILANE	SiH_4	G	○	○	◎
SILICON TERACHLORID	$SiCl_4$	L.G	○	△	◎
SULFER HEXAFLORIDE	SF_6	L.G	○	○	◎
TUNGSTEN HEXAFLUORIDE	WF_6	L.G	○	△	◎

* STATE-L.G: LIQUEFIED GAS C.G: COMPRESSED GAS G:GAS

** SEAT MATERIALS - ◎: VERY GOOD ○: GOOD △: CAUTION X: POOR

Warning! For your safety

The system designer and user have the sole responsibility for selecting products suitable for their special application requirements, ensuring their safe and trouble-free installation, operation, and maintenance. Application details, material compatibility and product ratings should all be considered for each selected product. Improper selection, installation or use of products can cause property damage or personal injury.

UCV HM SERIES

ULTRA-HIGH PURITY, METAL-DIAPHRAGM VALVES FOR GAS DELIVERY SYSTEMS

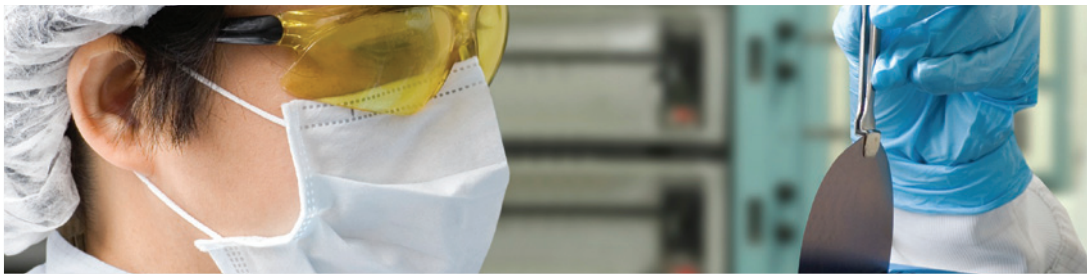

UCV®

HAM-LET®
ADVANCED CONTROL TECHNOLOGY

HM & HMS SERIES

METAL DIAPHRAGM VALVES

The HM & HMS Valve Series includes Metal-Diaphragm, Ultra-Clean Valves, size 1/4". The HM & HMS Series is suitable for low and high-pressure applications in multi-port configurations (2- port, L-port, 3-port, 4-port). The valves can be operated manually or pneumatically. UCV valves are assembled, inspected, tested and packaged in a Class 10 Clean Room. Each valve is individually assembled and submitted to pressure testing, functionality tests and a helium leak test.

THE UCV HM & HMS SERIES SPECIFICATIONS

MATERIAL

UCV Series Valves meet the chemical composition and the mechanical properties of stainless steel 316L according to ASTM A276 specification. Chemical Composition: The body material of the UCV Series complies with SEMI F20 - Sulfur content is lower or equal to 0.01 percent.

MECHANICAL SIZE - DIMENSIONAL SPECIFICATION

UCV Series Valves meet the end-to-end length and overall envelope and comply with SEMATECH Technology Transfer 96063137-ENG.

PACKAGING

HAM-LET standard for packing the UCV Series Valves is a double bag. The inner bag contains ultra-pure nitrogen.
All end fittings, threads and sealing surfaces are protected with a cap to prevent any damage.

ELECTROPOLISHED SURFACES - SURFACE FINISH

UCV Valves meet a surface defect level of maximum 25 for any location with a maximum average of 15. This test is done in accordance with SEMASPEC 90120401-STD.
UCV Valves meet the Chromium Enhancement ratio of chromium-to-iron ratio of 2:1 and chromium oxide-to-iron oxide ratio of 3:1. This test is done in accordance with SEMASPEC 90120403-STD.
UCV Valves meet the oxide layer depth and surface contamination of 20 angstroms after subtraction of the carbon layer. The carbon layer is 10 angstroms.

MAXIMUM SURFACE CONTAMINATIONS

Element	Atomic Percentage
Carbon	30.0
Sulfur	1.0
Phosphorus	2.0
Silicon	1.5
Nitrogen	2.0

SURFACE ROUGHNESS

All wetted parts of the UCV Series Valves have an average surface roughness (Ra avg) of 5 microinch Ra, and maximum surface roughness (Ra max) of 10 microinch Ra, complying with ISO 4288.

HELIUM LEAK TEST

All UCV Series Valves are 100% helium leak tested. Helium-leak tests are performed using a helium-leak detector machine with a sensitivity of 0.1×10^{-10} atm cc He/sec. The standard leak-rate tests are listed below.
(Lower leak rates are optional on request)
Maximum Helium (He) leak ratings:
Inboard leak integrity 3×10^{-11} atm cc/sec. Complies with SEMI F1. Leak across the seat 3×10^{-10} atm cc/sec. This test is done in accordance with SEMASPEC 90120391B-STD (held for at least 15 seconds).

PARTICLES

The particles standard for UCV Series Valves is: less than 5 particles/ft^3 for particles 0.1µm and 20 particles 0.02 µm for static and dynamic tests, according to SEMASPEC 90120390-STD.

MOISTURE TESTING

The standard moisture level is 20 ppbv H20 in Nitrogen baseline or less, within 2 hours after 2 ppmv spike for 1 minute at flow rate of 1.5 SLM or less, according to SEMASPEC 90120397-STD.

CLEANING

All CNC machined valve parts are cleaned to ensure that they are free of emulsion composition and residues involved in the machining process.

RELIABILITY

The valves demonstrate a MTTF of more than 1 million cycles for pneumatic valves and more than 100,000 cycles for manual valves, in accordance with SEMASPEC 90120395-STD and 90120390-STD.

HM SERIES

METAL DIAPHRAGM MANUAL HANDLE VALVES

The manually operated Ultra-Clean Diaphragm Valves are for high and low-pressure applications. The HM series is designed and manufactured per SEMI F-20 material specifications. The valves include a flexible port design with butt weld and face-seal end connections.

MATERIALS

Item No.	Part No.	Material
1*	Body	**Stainless steel, 316L Var or Vim/Var[1]
2*	Seat	**PCTFE,Vespel®
3*	Seat Holder	**Stainless steel, 316L Var or Vim/Var[1]
4*	Diaphragm	Elgiloy
5	Act. Button	Stainless steel, AISI 304, ball AISI 440C
6	Act. Button Holder	Stainless steel, ASTM 630 H900
7	Handle & Stem Assembly	A6061T6, ASTM 630 H900

*Wetted parts ** Standard material

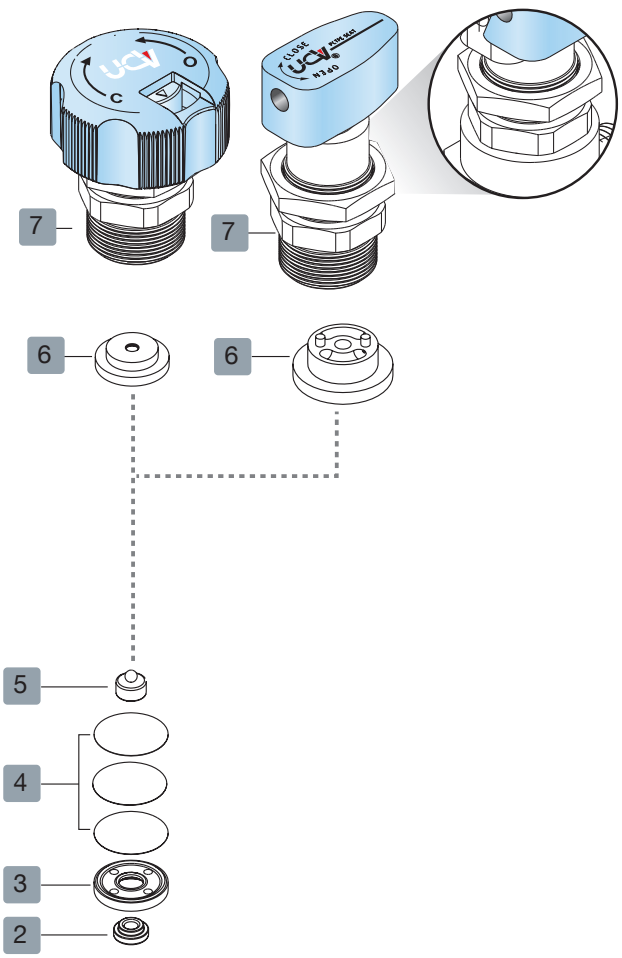

PANEL MOUNTING

Each manual valve has an upper panel mounting as well as a bottom mounting, as standard.
The upper panel mounting has a stainless steel nut, which requires a minimum width of 0.04” for panel.

For multi port valve, select the End Connection for each port, starting with port A which is indicated by the sniffer hole in the body. Continue with the other ports (B,C,D).

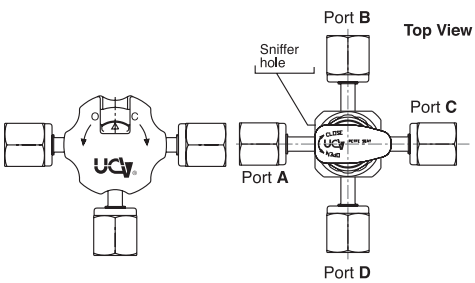

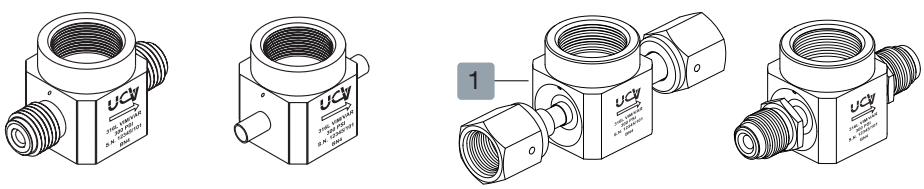

Male Face-Seal Ends | Butt Weld Ends | Swivel Female Face-Seal Ends | Swivel Male Face-Seal Ends

[1] Per SEMI F20-0305

HM SERIES

METAL DIAPHRAGM MANUAL HANDLE VALVES

UCV SPECIFICATIONS

Structure	Direct-seal metal-diaphragm valve without seal packing Manually operated
Pressure	Vacuum to 300 psi (20 bar)
Temperature: Standard	14 to 140°F, -10 to 60°C (PCTFE Seat)
Available	14 to 302°F, -10 to 150°C (*Vespel® Seat)
Leakage: Inboard Leakage	$\leq 3x10^{-11}$ atm cc He/sec
across the seat	$\leq 1x10^{-9}$ atm cc He/sec
Particle	No particle detected above 0.1µm.
Operated	Round handle 1/4 and 3/4 turn Oval handle 1/4 turn
Connections	Face seal or tube weld
CV value - Low Pressure	0.3
Valve Lift	0.024'', 0.6 mm
Direction	2 port straight, 2 port L, 3 port, 4 port
Surface Finish Ra (Ave)-Standard	5µin
Surface Finish Ra (Max)-Standard	10µin

*Used with Viton O-ring

LP-Low pressure

NITROGEN FLOW FOR LOW-PRESSURE VALVE-CV 0.3

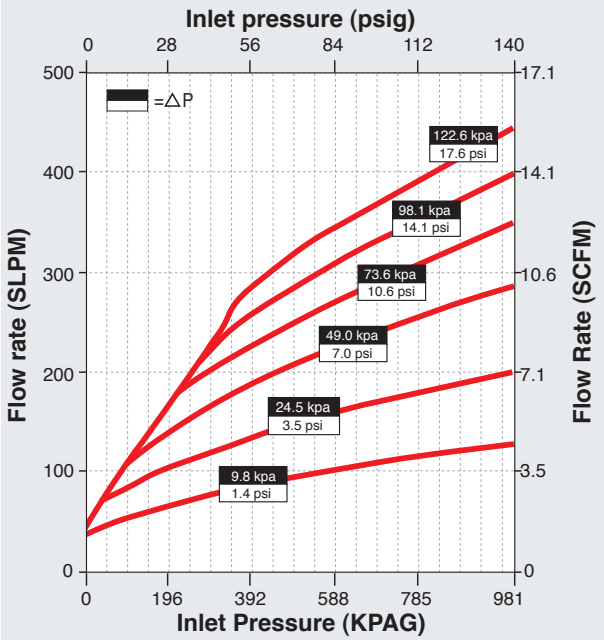

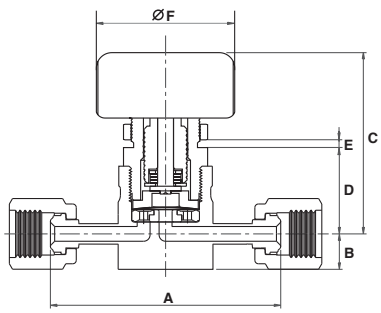

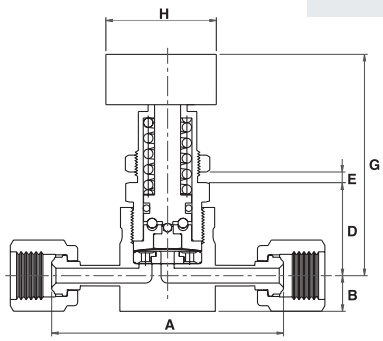

VALVE DIMENSIONS- inch, mm

Size	Connection	A		B		C		D		E*		F		G		H	
		in	mm	in	mm	in	mm	in	mm	in	mm	in	mm	in	mm	in	mm
1/4''	Swivel Female Face-Seal	2.78	70.6	0.44	11.0	2.48	63.0	1.14	29.0	0.04	1.00	1.77	45.0	2.68	68.0	1.34	34.0
1/4''	Male Face-Seal	2.30	58.4	0.44	11.0	2.48	63.0	1.14	29.0	0.04	1.00	1.77	45.0	2.68	68.0	1.34	34.0
1/4''	Swivel Male Face-Seal	2.78	70.6	0.44	11.0	2.48	63.0	1.14	29.0	0.04	1.00	1.77	45.0	2.68	68.0	1.34	34.0
1/4''	Butt Weld	1.75	44.4	0.44	11.0	2.48	63.0	1.14	29.0	0.04	1.00	1.77	45.0	2.68	68.0	1.34	34.0

Dimensions are for reference only, and are subject to change.

*Minimum height for panel

HM SERIES

METAL DIAPHRAGM AIR-OPERATED VALVES

The pneumatically operated Ultra-Clean Diaphragm Valve is for high and low-pressure applications. The HM series is designed and manufactured per SEMI F-20 material specifications, and it offers a flexible port design with butt-weld and face-seal end connections.

MATERIALS

Item No.	Part No.	Material
1*	Body	**Stainless steel, 316L Var or Vim/Var[1]
2*	Seat	**PCTFE,Vespel®
3*	Seat Holder	**Stainless steel, 316L Var or Vim/Var[1]
4*	Diaphragm	Elgiloy
5	Act. Button	Stainless steel, AISI 304, ball AISI 440C
6	Act. Button Holder	Stainless steel, ASTM 630 H900
7	Actuator Assembly	A6061T6

*Wetted parts ** Standard material

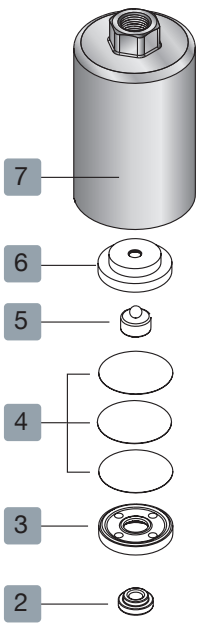

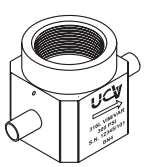

Butt Weld Ends

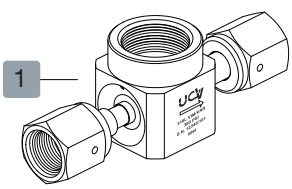

Swivel Female Face-Seal Ends

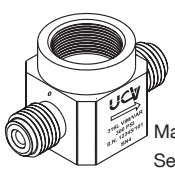

Male Face-Seal Ends

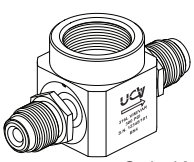

Swivel Male Face-Seal Ends

STANDARD PANEL MOUNTING FOR TWO-PORT STRAIGHT VALVE

- Optional, four threaded holes.
- All the other valve types have standard four threaded holes.
- According to SEMATECH 96063137-ENG.

® Registered trademark: PCTFE, VESPEL-TM Dupont, KEL-F TM 3M Company.

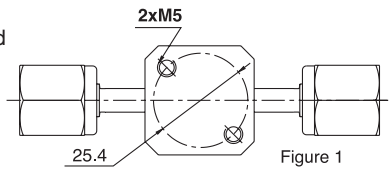

Figure 1

The M5 threaded mounting holes will accept 10-32 screws.

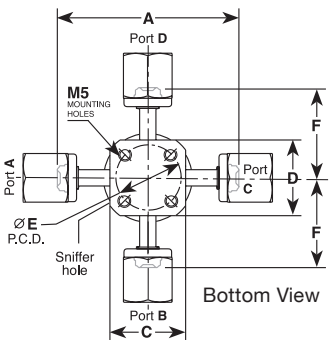

Bottom View

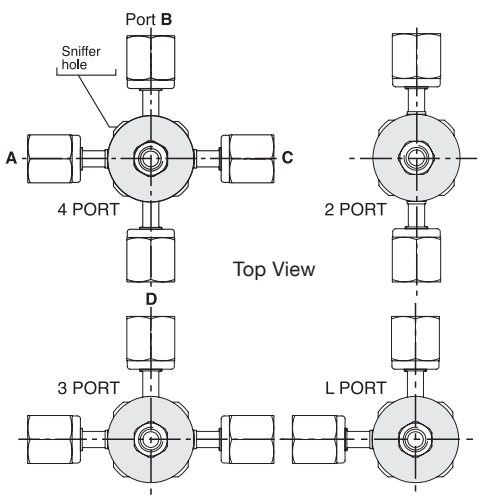

[1] Per SEMI F20-0305

HM SERIES

METAL DIAPHRAGM AIR OPERATED VALVES

UCV SPECIFICATIONS

Structure	Direct-seal metal-diaphragm valve without seal packing Pneumatically operated
Pressure	Vacuum to 300 psi (20 bar)
Temperature: Standard	14 to 140°F, -10 to 60°C (PCTFE Seat)
Available	14 to 302°F, -10 to 150°C (*Vespe®l Seat)
Leakage: Inboard Leakage	$\leq 3x10^{-11}$ atm cc He/sec
across the seat	$\leq 1x10^{-9}$ atm cc He/sec
Particle	No particle detected above 0.1µm.
Operated	Pneumatic, NC/NO**
Connections	Face Seal or Tube Weld
CV value - Low Pressure	0.3
Valve Lift	0.6mm (0.024")
Direction	2-port straight, 2-port L, 3-port, 4-port
Surface Finish Ra (Ave)-Standard	5µin
Surface Finish Ra (Max)-Standard	10µin
Air Supply	60-90 psig , 4 - 6 bar
Air Connection	1/8'' NPT

*Used with Viton O-ring **NC-Normally Closed NO-Normally Open LP-Low pressure

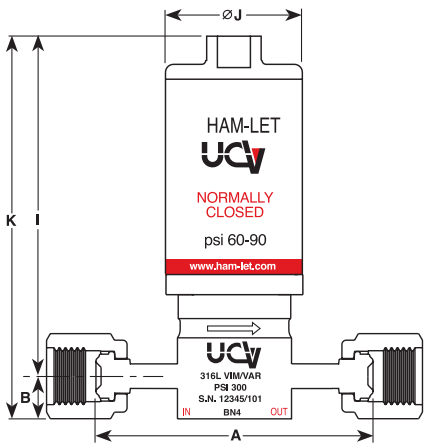

C - 300 psi

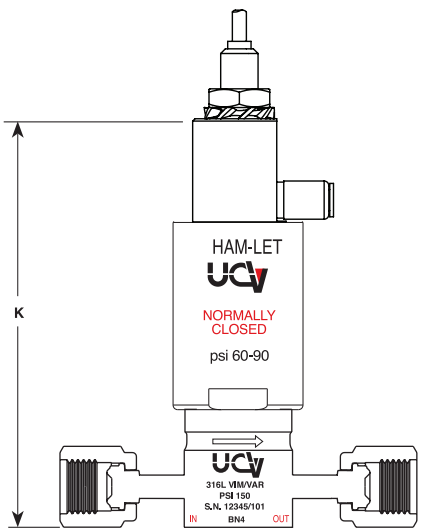

LC - 150 psi - Position Switch

ACTUATOR DIMENSIONS - INCH (MM)

Actuator type	I	ØJ	K	Effective Area	Output Force
Low Pressure	3.54 (90)	1.33 (34)	3.78 (96)	1.58 in²	550 psig
High Pressure	3.50 (89)	1.57 (40)	3.93 (100)	1.58 in²	550 psig
AO-Position switch			4 (101.95)		

VALVE DIMENSIONS - INCH (MM)

Size	Connection	A		B		C		D		E*		F	
		in	mm	in	mm	in	mm	in	mm	in	mm	in	mm
1/4''	Swivel Female Face-Seal	2.78	70.6	0.44	11.0	1.16	29.4	1.16	29.4	1.00	25.4	1.40	35.3
1/4''	Male Face-Seal	2.30	58.4	0.44	11.0	1.16	29.4	1.16	29.4	1.00	25.4	1.15	29.2
1/4''	Swivel Male Face-Seal	2.78	70.6	0.44	11.0	1.16	29.4	1.16	29.4	1.00	25.4	1.40	35.3
1/4''	Butt Weld	1.75	44.4	0.44	11.0	1.16	29.4	1.16	29.4	1.00	25.4	0.87	22.2

* The dimensions apply to pneumatic and manual valves. Dimensions are for reference only, and are subject to change.

ORDERING INFORMATION – HM SERIES

Your safety is important to us. Please ensure proper reference to our latest catalog

Valve Description Example:

HM 2 1 4 V K R BW 4 GF 4 LS

Port A — Port B

Valve Series

HM	- UCV Valves

Port Designator

0, 1, 2, 3, 4, 5	

Body Material

V	- SS316L Var or Vim/Var[1] (Bar Stock) Standard

Actuation Device

LC	- Air Operated N.C. 150 psi
C	- Air Operated N.C. 300 psi
LO	- Air Operated N.O. 150 psi
O	- Air Operated N.O. 300 psi
LR	- Round Handle 3/4 turn 300 psi
LQ	- Oval Handle 1/4 turn 300 psi

Handle color can be delivered by request.
NC-Normally close, NO- Normally open.

End Size

4	- 1/4''
8	- 1/2''

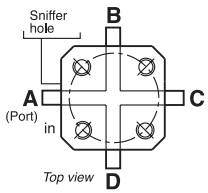

Standard two-port, straight valve has two panel-mounted holes (see fig. 1).

Valve Type

2	- 2-Port Valve
3	- 3-Port Valve
4	- 4-Port Valve

Body Size

4	- 1/4

Seat Material

K	- PCTFE (KEL-F®)
S*	- VESPEL®

K Standard, *Available

End Connection

BW	- Butt Weld
GF	- Swivel female Face-seal
GM	- Swivel male Face-seal
M	- Male Face-seal
LL	- Let-Lok®

Features

LD	- Locking Device
ISLT	- LOTO handle
LS	- For limit switch indicator on AOP Valve, contact your local HAM-LET representative

PORT DESIGNATOR - (TOP VIEW)

Valve Configuration	Port Designator	Schematic Flow Chart
2 Port Valve **HM2_** 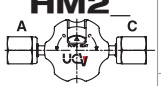	0	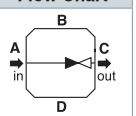
	1 L-Port	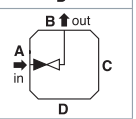
	2 L-Port	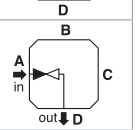

Valve Configuration	Port Designator	Schematic Flow Chart
3 Port Valve **HM3_** 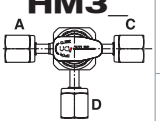	0	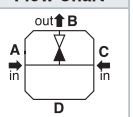
	1	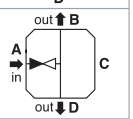
	2	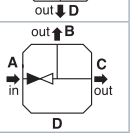
	3	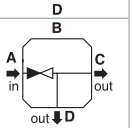
	4	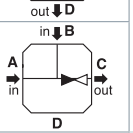
	5	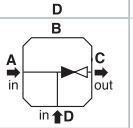

Valve Configuration	Port Designator	Schematic Flow Chart
4 Port Valve **HM4_** 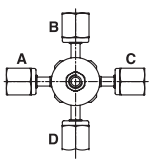	0	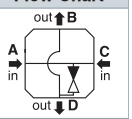
	1	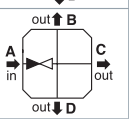
	2	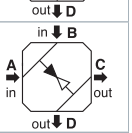
	3	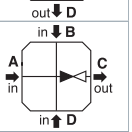

[1] Per SEMI F20-0305

HMS SERIES
SURFACE-MOUNT SERIES

The Ultra Clean Valves Series offer a surface mount body design. The surface mount design complies with SEMI PR 3.1 for 1.112'' C-seal. HMS Series is manufactured according to UHP specifications of SEMI F-20 with manual and pneumatic operating mechanisms.

MATERIALS

Item No.	Part No.	Material
1	Body	Stainless steel, 316L Var or Vim/Var(1)
2	Seat	PCTFE,Vespel®
3	Seat Holder	Stainless steel, 316L Var or Vim/Var(1)
4	Diaphragm	Elgiloy
5	Actuation Device	Manual A6061T6
		Pneumatic A6061T6

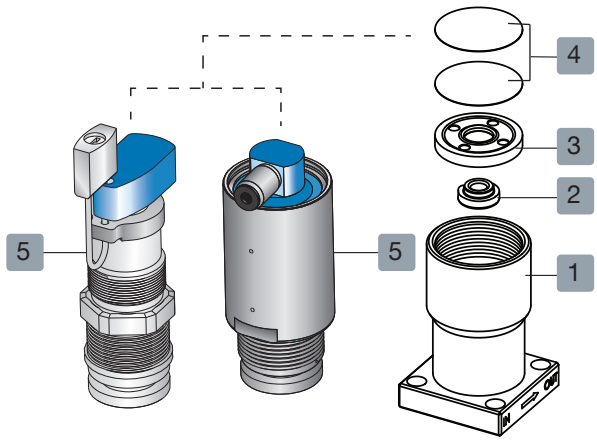

UCV SPECIFICATIONS

Structure	Direct-seal, metal-diaphragm valve without seal packing, manually and pneumatically operated
Pressure	Vacuum to 150 psi (10 bar)
Operating Temperature: Standard	14 to140°F, -10 to 60°C (PCTFE Seat)
Available	14 to 302°F, -10 to150°C *(Vespel® Seat)
Leakage: Inboard Leakage	$\leq 3x10^{-11}$ atm cc He/sec
across the seat	$\leq 1x10^{-9}$ atm cc He/sec
Particle	No particles detected above 0.1µm.
CV value	0.3
Surface Finish Ra (Ave)-Standard	5µin
Actuator Air Supply (Pneumatic)	60-90 psig , 4 - 6 bar
Air Connection (Pneumatic)	Thread 10-32 UNF

* Used with Viton® O-ring for actuation device

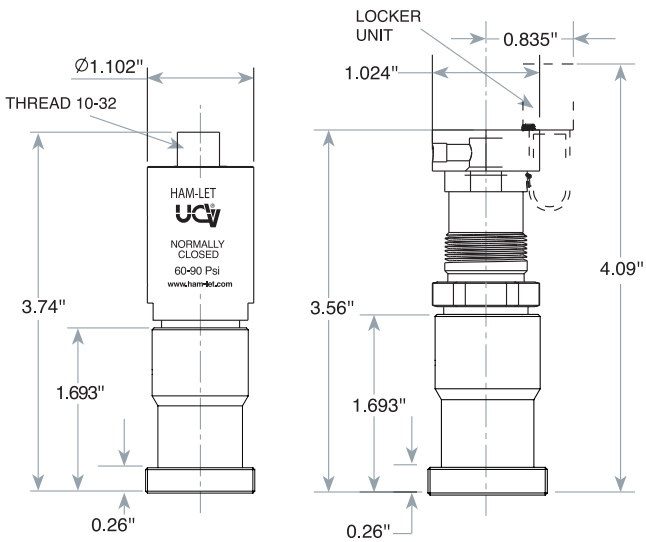

ACTUATION DEVICE – MARKING

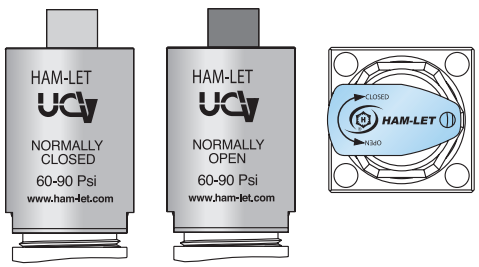

Warning! For your safety

The system designer and user have the sole responsibility for selecting products suitable for their special application requirements, ensuring their safe and trouble-free installation, operation, and maintenance. Application details, material compatibility and product ratings should all be considered for each selected product. Improper selection, installation or use of products can cause property damage or personal injury.

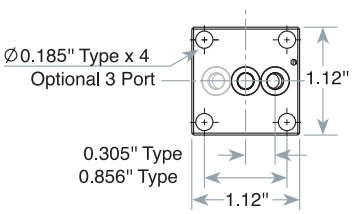

- The dimensions apply to pneumatic and manual valves.
- Dimensions are for reference only, and are subject to change.
- Dimensions are in inches.

® Registered trademark: Elgiloy, PCTFE, VESPEL-TM Dupont; KEL-F TM 3M Company. ® K1S is a KINETICS patent

(1) Per SEMI F20-0305

HMSC
COMPACT SURFACE-MOUNT SERIES

The Ultra Clean Valve Series offer a surface mount body design. The surface mount design complies with SEMI PR 3.1 for 1.112'' C-seal. This valve is a low profile body design with Integral Safety Lockout Tag-out (ISLT©) handle.
(Pat. No. 165393).

MATERIALS

Item No.	Part No.	Material
1	Body	Stainless steel, 316L Var or Vim/Var[1]
2	Seat	PCTFE,Vespel®
3	Diaphragm	Elgiloy®
4	Actuation Device	Manual A6061T6
		Pneumatic A6061T6

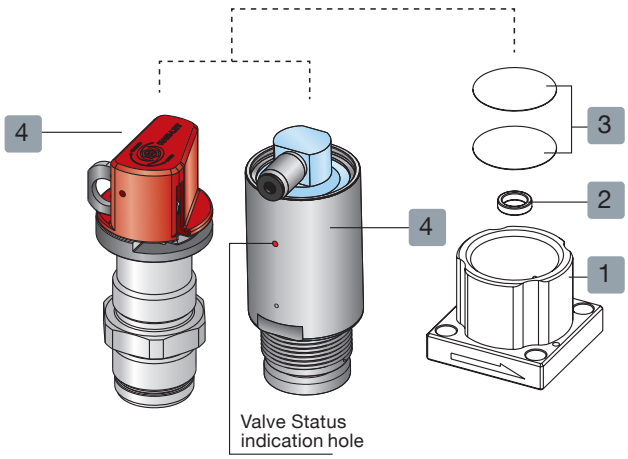

UCV SPECIFICATIONS	
Pressure	Vacuum to 150 psi (10 bar)
Operating Temperature: Standard	14 to140°F, -10 to 60°C (PCTFE Seat)
Available	14 to 302°F, -10 to150°C *(Vespel® Seat)
Leakage: Inboard Leakage	$\leq 3x10^{-11}$ atm cc He/sec
across the seat	$\leq 1x10^{-9}$ atm cc He/sec
Particle	No particles detected above 0.1µm.
CV value	0.3
Surface Finish Ra (Ave)-Standard	5µin
Actuator Air Supply (Pneumatic)	60-90 psig , 4 - 6 bar
Air Connection (Pneumatic)	Thread 10-32 UNF

* Used with Viton® O-ring for actuation device

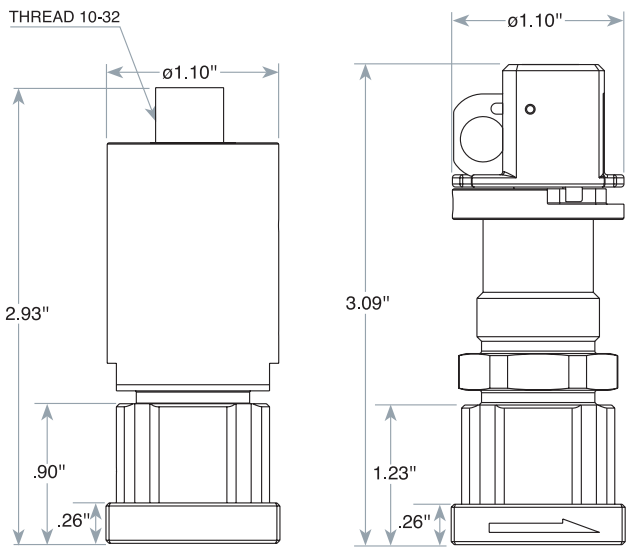

ACTUATION DEVICE – MARKING

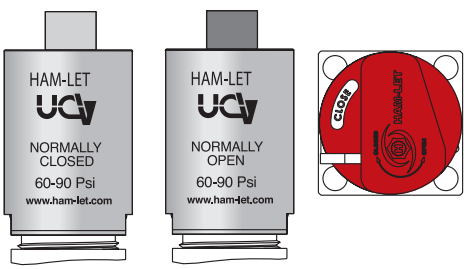

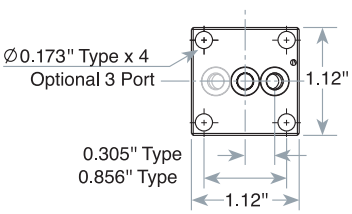

- The dimensions apply to pneumatic and manual valves.
- Dimensions are for reference only, and are subject to change.

Warning! For your safety

The system designer and user have the sole responsibility for selecting products suitable for their special application requirements, ensuring their safe and trouble-free installation, operation, and maintenance. Application details, material compatibility and product ratings should all be considered for each selected product. Improper selection, installation or use of products can cause property damage or personal injury.

[1] Per SEMI F20-0305

ORDERING INFORMATION – HMS & HMSC

Your safety is important to us. Please ensure proper reference to our latest catalog

Stage: A B

Valve Description Example: **HM S 30 - 4 V K LQ - LD**

Valve Series

- **S** - UCV Surface Mount Valves
- **SC** - Compact UCV Surface Mount Valves

Body Size

- **4** - 1/4'' (Modular 1.125 inch)

Seat Material

- **K** - PCTFE (KEL-F®)
- **S*** - VESPEL®

K Standard, *Available.

Valve Type

- **20** - Two Port Valve
- **30** - Three Port Valve

Body Raw Material

- **V** - SS316L Var or Vim/Var[1]

Other raw materials are available.

Actuation Device

- **C** - Air Operated N.C. 150 psi
- **LO** - Air Operated N.O. 150 psi
- **LQ** - Oval Handle 1/4 turn 150 psi

* Actuation for High Temperature with Viton® O-ring
* HMSC is Loto Enabled

Option

- **LD** - Locking Device
- **ISLT** - Lotto Device

For limit switch indicator on AOP Valve, contact your local Ham-Let representative

ORDERING EXAMPLES

	HMS30 - 4VSLQ -LD		HMS20 - 4VKC	
Valve Type - Stage A	30	Surface Mounted Valve - Three Port	20	Surface Mounted Valve - Two Port
Body Size	4	1/4'' (Modular 1.125 inch)	4	1/4'' (Modular 1.125 inch)
Body Material	V	SS316L Var or Vim/Var[1]	V	SS316L Var or Vim/Var[1]
Seat Material	S	VESPEL®	K	PCTFE (KEL-F®)
Actuation Device - Stage B	LQ	Oval Handle 1/4 turn 150 psi	C	Air Operated N.C. 150 psi
Features	LD	Locking Device		

[1] Per SEMI F20-0305

TWO STAGES FOR ORDERING SURFACE-MOUNT VALVES A B

STAGE A VALVE TYPE

	Flow Direction Body View	Schematic Flow Chart	Flow Direction
HMS(C)20 Two Port Valve	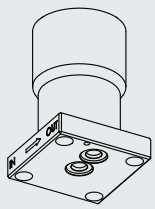	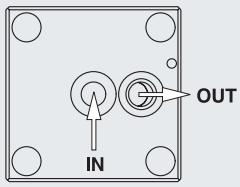	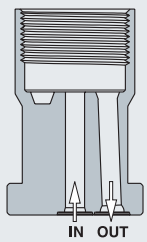
HMS(C)30 Three Port Valve	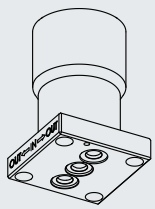	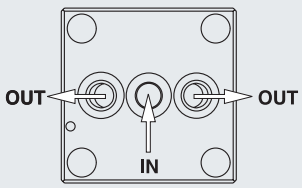	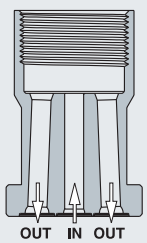

STAGE B ACTUATION DEVICE*

Actuation Type	Actuation Mode	Description
Pneumatic	C	Normally Closed 150 psi 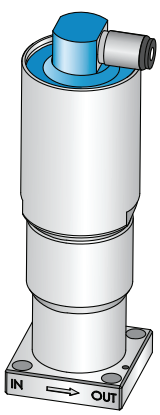 * Blue Actuation Cap indicates Normally Closed.

Actuation Type	Actuation Mode	Description
Manual	LD	Oval Handle 1/4 turn 150 psi with Locking Device 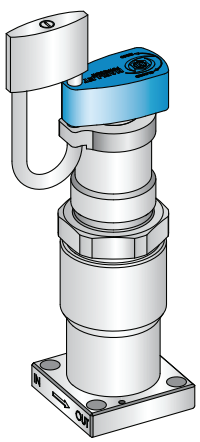 * The Actuation Device for the manual valve does not include: locking device or locker unit as standard.

HMC SERIES

COST EFFICIENT ULTRA CLEAN METAL DIAPHRAGM VALVE FOR GENERAL PURPOSE

Metal Diaphragm Valves

- Compact design
- Manual 3/4 turn handle and position indicator (open/close), 300 PSI
- Safety clip; Locking device for manual round 3/4 turn handle
- Pneumaticlly actuated, Normally Closed and Normally Open version, 150 PSI
- Electropolished surfaces as standard
- Standard panel mounting

PART NUMBER / DIMENSIONS

Actuation type	End Connection	A mm	B mm	C mm	D mm	E mm	F mm	G mm
Air Operated NC / NO	Butt Weld 1/4	44.4	56.9	32				
	Male HTC 1/4	58.4						
	Let-Lok 1/4	64.7*						
	Female HTC 1/4	70.6						
	Swivel Male HTC 1/4	70.6						
Round 3/4 Turn Handle	Butt Weld 1/4	44.4	51.4	45	11	25.4	M5	29.4
	Male HTC 1/4	58.4						
	Let-Lok 1/4	64.7*						
	Female HTC 1/4	70.6						
	Swivel Male HTC 1/4	70.6						
Oval Directional 1/4 Turn Handle	Butt Weld 1/4	44.4	68	34				
	Male HTC 1/4	58.4						
	Let-Lok 1/4	64.7*						
	Female HTC 1/4	70.6						
	Swivel Male HTC 1/4	70.6						

* Let-Lok configuration length including nuts and ferrules fingers tight

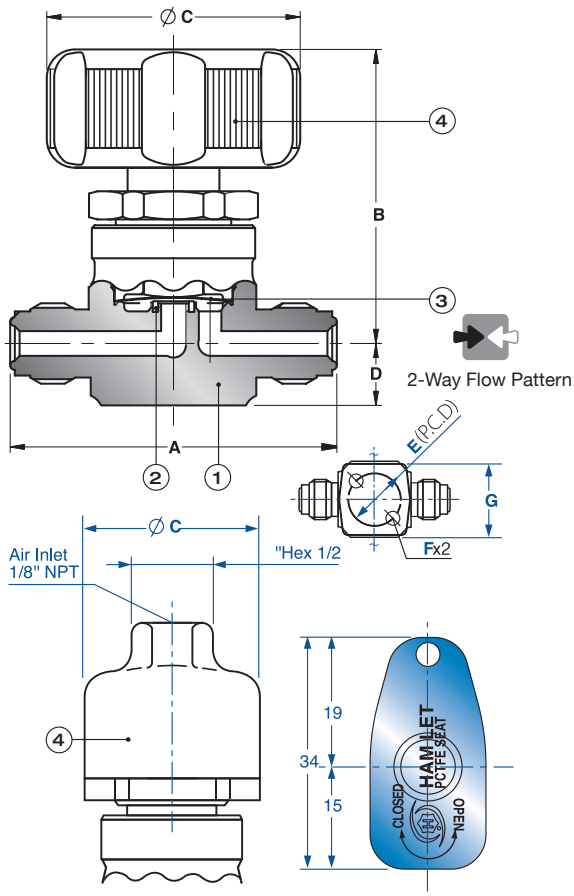

SPECIFICATIONS

Size	Pressure	Temp.	Cv	Leak Rates	
				Inboard	Across Seat
1/4	Vaccum to 150 psi (10 bar)	-10~60°C 14~140°F	0.25	$\leq 3 \times 10^{-11}$ Atm cc/sec Helium	$\leq 3 \times 10^{-9}$ Atm cc/sec Helium

STRUCTURE

Parts	Material
1 Body	316L Stainless Steel / SS316L Var or Vim/Var(1)
2 Seat	PCTFE
3 Diaphragm	Elgiloy
4 Handle/Act	Aluminum Anodize

ORDERING INFORMATION

Valve Description Example: HMC 20 4 L K ER M4

Valve Type	Body Size	Body Material	Seat Material	Actuation Type	End Connection
2 2-port	4 - 1/4	L - St.St. 316L	K - PCTFE	ER - Round 3/4 turn Handle	M4 - 1/4 Male Face Seal
		A - SS316L Var or Vim/Var(1)		EC - Air operated Normally Close	BW4 - 1/4 Tube Butt-Weld
				EO - Air operated Normally Open	LL4 - 1/4 Let-Lok
				EQ - Oval Directional	GM4 - 1/4 Swivel Male Face Seal
					GF4 - 1/4 Swivel Female Face Seal

HMC20 is standard. For other configuration contact HAM-LET customer service

The system designer and user have the sole responsibility for selecting products suitable for their special application requirements, ensuring their safe and trouble-free installation, operation, and maintenance. Application details, material compatibility and product ratings should all be considered for each selected product. Improper selection, installation or use of products can cause property damage or personal injury.

(1) Per SEMI F20-0305

HYBRID

AIR OPERATED, MANUAL OVERRIDE

Metal Diaphragm Valves

Surface-mount models from the Ultra Clean Valve specifications are ready for SEMI PR3.1 1.125" C seal connections. These valves implement Cv0.27 for their compact designs.

VALVE DIMENSIONS - INCH (MM)

Part Number/ep	Size	End Connection	A		B		C		D		E		F		G		H		J	
			in	mm	in	mm	in	mm	in	mm	in	mm	in	mm	in	mm	in	mm	in	mm
2LNS4C-CM2-HB	1/4"	1.125"	0.89	22.8	4.4	111.0	0.25	6.6	1.12	28.6	0.30	7.75	0.50	12.7	0.19	5	0.85	21.74	Ø.17	Ø4.4

SPECIFICATIONS

Size	Pressure	Temp.	Cv	Leak Rates	
				Inboard	Across Seat
1/4	1MPa (150 psi)	-10 60°c	0.3	3 X 10^{-12} Pa ˡ m³/sec Helium	3 X 10^{-10} Pa ˡ m³/sec Helium

STRUCTURE

Parts	Material
1 Body	316L Stainless Steel
2 Seat	PCTFE/PI (Vespel®)
4 Diaphragm	Elgiloy
5 Handle/Act	Aluminum

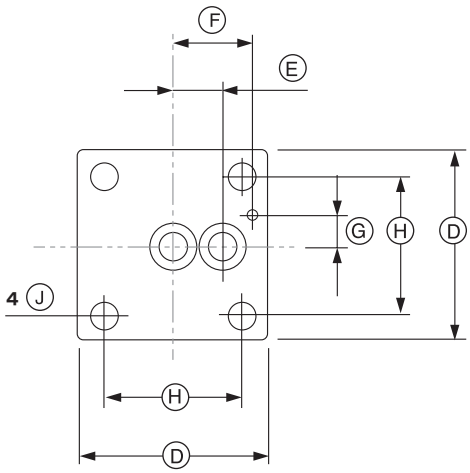

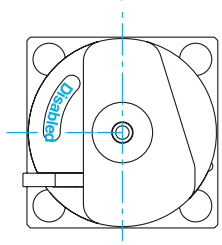

View of B-B (Disabled Position)

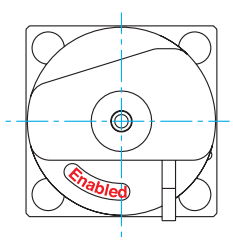

View of B-B (Enabled Position)

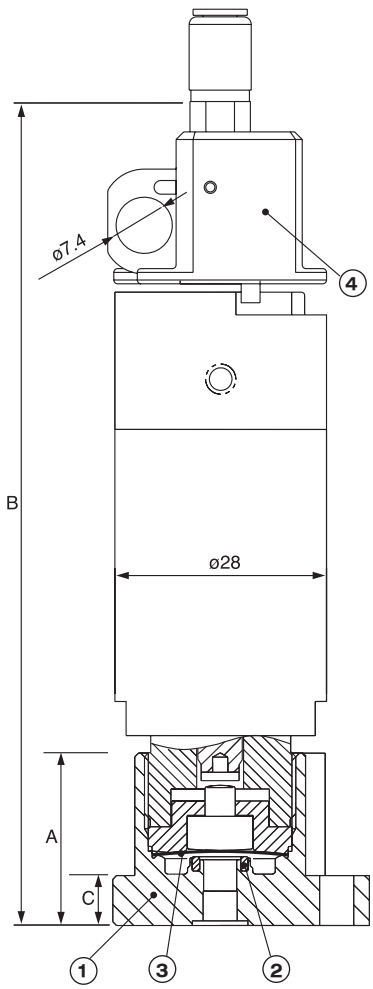

ORDERING INFORMATION

2LNS-4C-CM2-HB

The system designer and user have the sole responsibility for selecting products suitable for their special application requirements, ensuring their safe and trouble-free installation, operation, and maintenance. Application details, material compatibility and product ratings should all be considered for each selected product. Improper selection, installation or use of products can cause property damage or personal injury.

® Registered trademark: Elgiloy, PCTFE, VESPEL-TM Dupont; KEL-F TM 3M Company. ® K1S is a KINETICS patent ⋆ Patent No.: 165393

HAM–LET ADVANCED CONTROL TECHNOLOGY

HAM-LET

365

HD SERIES
ECONOMIC DIAPHRAGM VALVES

The HD series of manual and pneumatically operated diaphragm valves provides a cost effective solution for low pressure applications up to 300 psi (20 bar). This unique diaphragm valve series was specifically designed to meet the pressure, finish and cleanliness requirements of Photo Voltaic panels and LED manufacturing as well as several Semiconductor applications.
The HD20 valve series is the latest addition to HAM-LET high quality and economic solutions.

HD20 SERIES SPECIFICATIONS

Structure	Direct-seal metal-diaphragm valve manually & pneumatic operated
Pressure: Manual Aluminum round handle ¼ turn	300 psi (20bar)
Air Operated	150psi (10bar)
Air Operated	300psi (20bar)
Temperature	14 to 104°F, -10 to 60°C (PCTFE Seat)
Leakage: Inboard Leakage	Less Than 3x10-11 atm cc He/sec
Across the seat	Less Than 1x10-9 atm cc He/sec
End Connections	Swivel Female Face-Seal, Male Face Seal, Swivel Male Face Seal, Buttweld, Let-Lok
Cv value	0.3 (for high flow available Cv = 0.42)
Direction	2 port straight
Surface Finish Ra (Ave)-Standard	10µin, No Electro Polish

AOP 150 psi

AOP 300 psi

STANDARD CONFIGURATION DIMENSIONS:

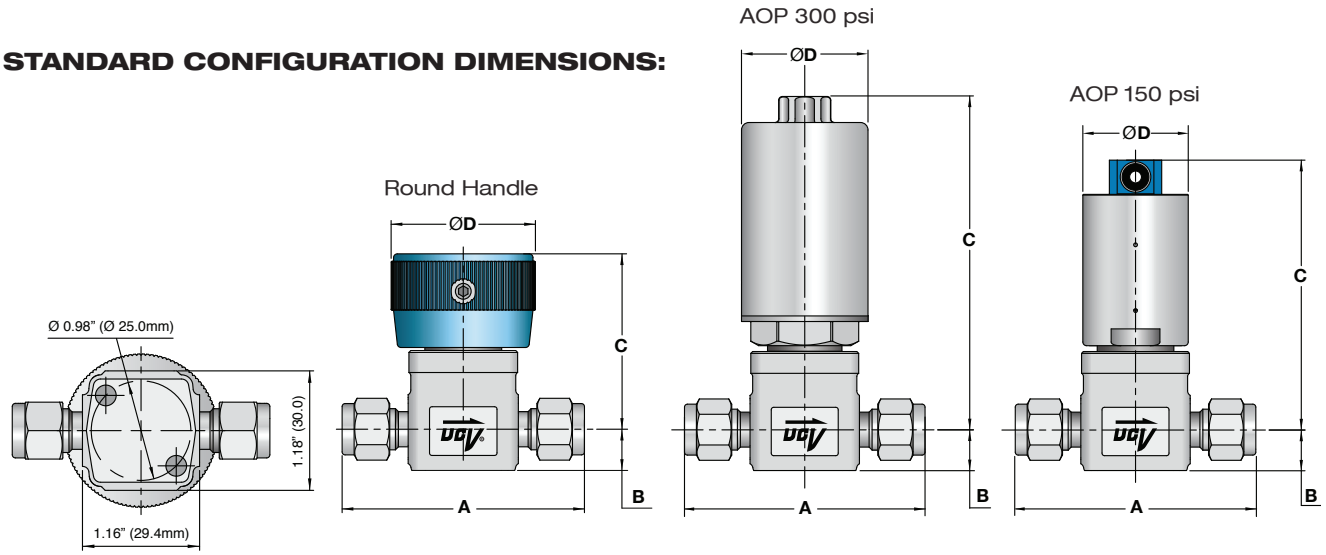

End Connections	Description	A		B		C		D	
		mm	inch	mm	inch	mm	inch	mm	inch
Swivel Female Face-Seal	HD20-4LKR-GF4	70.6	2.78	11	0.43	46.8	1.84	38	1.5
	HD20-4LKLC-GF4					72.2	2.84	28	1.1
	HD20-4LKC-GF4					90	3.54	34	1.34
Swivel Male Face-Seal	HD20-4LKR-GM4	70.6	2.78			46.8	1.84	38	1.5
	HD20-4LKLC-GM4					72.2	2.84	28	1.1
	HD20-4LKC-GM4					90	3.54	34	1.34
Male Face-Seal	HD20-4LKR-M4	58	2.28			46.8	1.84	38	1.5
	HD20-4LKLC-M4					72.2	2.84	28	1.1
	HD20-4LKC-M4					90	3.54	34	1.34
Buttweld	HD20-4LKR-BW4	44.4	1.75			46.8	1.84	38	1.5
	HD20-4LKLC-BW4					72.2	2.84	28	1.1
	HD20-4LKC-BW4					90	3.54	34	1.34
Let-Lok	HD20-4LKR-LL4	64.7	2.55			46.8	1.84	38	1.5
	HD20-4LKLC-LL4					72.2	2.84	28	1.1
	HD20-4LKC-LL4					90	3.54	34	1.34

ORDERING INFORMATION HD SERIES

HD 20 - 4 L K R - LL 4 - LS

Valve Series
- **HD Series**

Valve Type
- **20** - 2-Port Valve

* Port Designator according to Ham-Let Catalog

Body Material
- **L** - 316L Stainless Steel

Actuation Device
- **LC** - Air Operated N.C.150 psi
- **C** - Air Operated N.C.300 psi
- **R** - Round Handle 1/4 turn 300 psi

NC- Normally Closed

End Size
- **4** - 1/4"
- **6** MM

Body Size*
- **4** - 1/4

*Note: Body size is 1/4" for all end sizes

Seat Material
- **K** - PCTFE (KEL-F®)

End Connection
- **BW** - Butt Weld
- **GF** - Swivel Female Face-Seal
- **GM** - Swivel Male Face-Seal
- **M** - Male Face-Seal
- **LL** - Let-Lok

Optional
- **LS*** - Limit Switch
- **HF**** - High Flow

* Contact your local HAM-LET representative
** Limited for specific configurations

HP SERIES

HIGH PRESSURE DIAPHRAGM VALVES

HP20 SERIES SPECIFICATIONS

Structure	Direct-seal metal-diaphragm valve manually & pneumatic operated
Pressure	Vacuum to 3060 psi (210 bar)
Temperature	14 to 104°F, -10 to 60°C (PCTFE Seat)
Leakage : inboard Leakage	Less Than 3x10-11 atm cc He/sec
Across the seat	Less Than 1x10-9 atm cc He/sec
Operated	Manual : Lever 1/4 turn
	Pneumatic : NC/NO
End Connections	Swivel Female Face-Seal, Male Face Seal, Swivel Male Face Seal, Buttweld, Let-Lok
CV value	0.23
Direction	2 port straight, 2 port L, 3 port, 4 port
Surface Finish Ra (Ave)-Standard	5µin
Air supply	60-90 psig, 4-6 bar
Air Connection	NPT 1/8”

STANDARD CONFIGURATION DIMENSIONS:
MANUAL HANDLE & PNEUMATIC, NC/NO

Bottom
Four mounting holes, M5 X 0.8 thread, 0.25” (6.5mm) deep, M5x0.8 holes are compatible with 10-32 mounting screws.

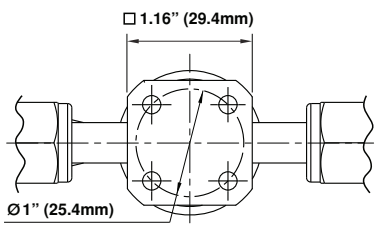

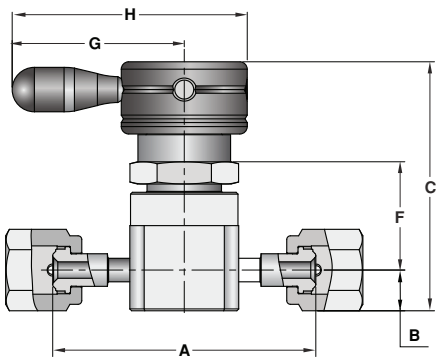

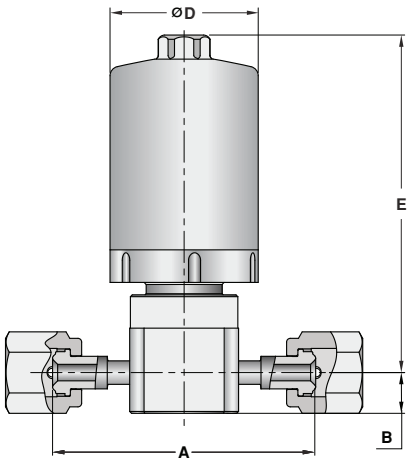

End Connections	Description	A	B	C	D	E	F	G	H
		mm (inch)	mm (inch)	mm (inch)	mm (inch)	mm (inch)	mm (inch)	mm (inch)	mm (inch)
Swivel Female Face-Seal	HP20-4VKHL-GF4	70.6 (2.78)	11 (0.43)	67.2 (2.65)	40 (1.57)	90 (3.54)	29.2 (1.15)	46.5 (1.83)	63.5 (2.5)
	HP20-4VKHC-GF4								
	HP20-4VKHO-GF4								
Male Face-Seal	HP20-4VKHL-M4	58.4 (2.3)							
	HP20-4VKHC-M4								
	HP20-4VKHO-M4								
Swivel Male Face-Seal	HP20-4VKHL-GM4	70.6 (2.78)							
	HP20-4VKHC-GM4								
	HP20-4VKHO-GM4								
Buttweld	HP-20-4VKHL-BW4	44.4 (1.75)							
	HP20-4VKHC-BW4								
	HP20-4VKHO-BW4								

ORDERING INFORMATION HP SERIES

Valve Description Example:

HP 2 1 4 V K HL BW 4 GF 4 LS

Port A — Port B

Valve Series

UCV Valves High Pressure

Port Designator*

0, 1, 2, 3, 4, 5

* Port Designator per HM Series in the catalog

Body Material

V- SS316L Var or Vim/Var[1] (Bar Stock)

Actuation Device

HL	- Blue Lever Handle
HC	- Air Operated N.C. 3060 psi
HO	- Air Operated N.O. 3060 psi

NC-Normally Closed, NO-Normally Open

End Size

4	- 1/4”
6	- 3/8”
8	- 1/2”
6 MM	
10 MM	
12 MM	

Valve Type

2	- 2-Port Valve
3	- 3-Port Valve
4	- 4-Port Valve

Body Size*

4 - 1/4

*Note: Body size is 1/4” for all end sizes

Seat Material

K - PCTFE (KEL-F®)

End Connection

BW	- Butt Weld
GF	- Swivel Female Face-Seal
GM	- Swivel Male Face-Seal
M	- Male Face-Seal
LL	- Let-Lok

Features

For limit switch indicator on AOP Valve, contact your local Ham-Let representative

[1] Per SEMI F20-0305

MULTI–PORT MONOBLOCK VALVE HMB & 2BE SERIES

HAM-LET®
ADVANCED CONTROL TECHNOLOGY

MATERIALS OF CONSTRUCTION - WETTED PARTS		
Item No.	**Parts**	**Material**
1	Body	SS316L Var or Vim/Var(1)
2	Seat Holder	SS316L Var or Vim/Var(1)
3	Seat	PCTFE, *Vespel®
4	Diaphragm	Elgiloy

* Optional

UCV - HM SPECIFICATIONS	
Structure	Direct-seal metal-diaphragm valve without seal packing manually and pneumatically operated
Item Pressure	Vacuum to 150psi (10bar)/300psi (20 bar)
Operating Temperature: Standard	14 to 140°F, -10 to 60°C (PCTFE Seat)
Available	14 to 302°F, -10 to 150°C (*Vespel® Seat)
Leakage: Inboard Leakage	$\leq 3x11^{-9}$ atm cc He/sec
Outboard Leakage	$\leq 1x10^{-9}$ atm cc He/sec
Across the Seat Leakage	$\leq 1x10^{-9}$ atm cc He/sec
Particle	No particle detected above 0.1µm.
Connections	Face seal or tube weld
CV value	0.3
Surface finish Ra (Ave)- Standard	5 µin
Air Connection (Pneumatic)	1/8" NPT
Actuator air supply (Pneumatic)	60 to 90 psig (4 to 6 bar)

*Used with Viton O-ring

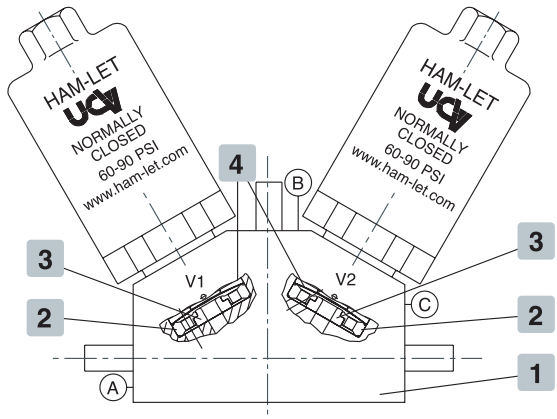

PANEL MOUNTING – STANDARD

Standard, eight threaded holes (M5).

Warning! For your safety

The system designer and user have the sole responsibility for selecting products suitable for their special application requirements, ensuring their safe and trouble-free installation, operation, and maintenance. Application details, material compatibility and product ratings should all be considered for each selected product. Improper selection, installation or use of products can cause property damage or personal injury.

THREE STAGES FOR ORDERING MONOBLOCK VALVES

STAGE A FLOW PATTERN

	Schematic Flow Path	Schematic Flow Chart	Flow Direction
HMB1	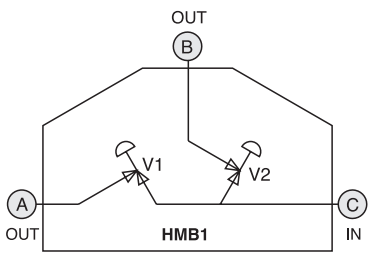	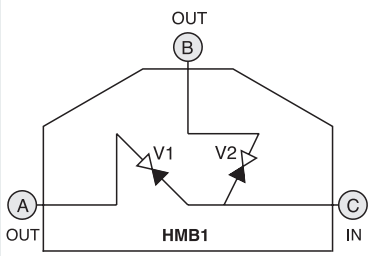	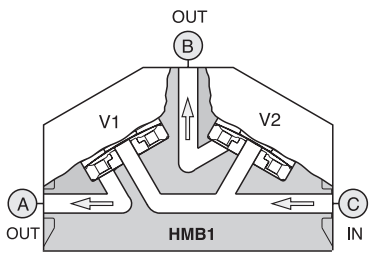
HMB2	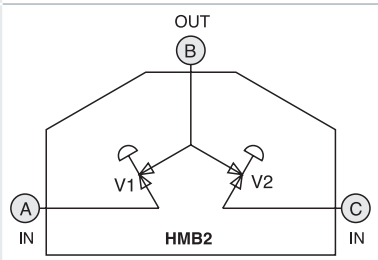	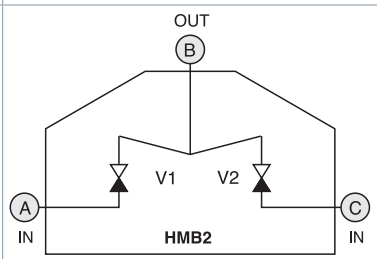	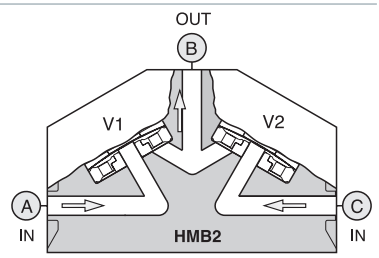

V1, **V2** are the inside valves

(A) (B) (C) are valves port sides

"IN" – defined as a port connected to the region below the valve seat.
"OUT" – defined as a port connected to the region above the valve seat.

®Registered trademarks: PCTFE, VESPEL–TM Dupont; KEL–F TM 3M Company.

(1) Per SEMI F20-0305

STAGE B ACTUATION DEVICE*

Actuation Type	Actuation Mode	Description
Pneumatic	C	Air Operated Normally Closed 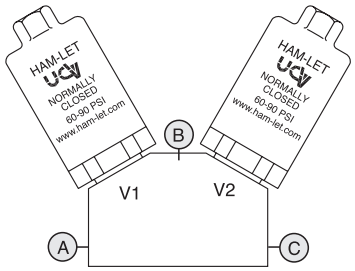
Pneumatic	O	Air Operated Normally Open 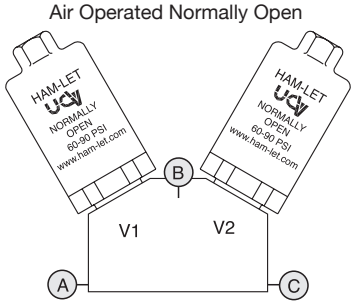

Actuation Type	Actuation Mode	Description
Manual	LQ	Ovel Handle 1/4 turn 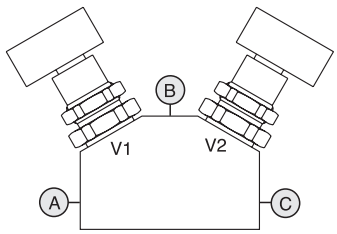
Manual	LR	Round Handle 3/4 turn 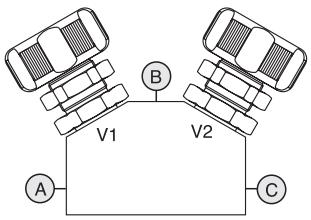

STAGE C END CONNECTIONS AND DIMENSIONS

Connection Type	Size	End Connection	X		Y		Z	
			in	mm	in	mm	in	mm
Butt Weld	1/4''	BW4	1.81	46.0	2.79	70.9	1.81	46.0
Swivel Female Face-Seal	1/4''	GF4	2.03	51.6	2.66	67.6	2.03	51.6
Swivel Male Face-Seal	1/4''	GM4	2.39	60.7	3.35	85.1	2.39	60.7

Dimensions are for standard monoblock valves.
For special customer dimensions, please consult HAM-LET.

Dimensions are for reference only, and are subject to change.

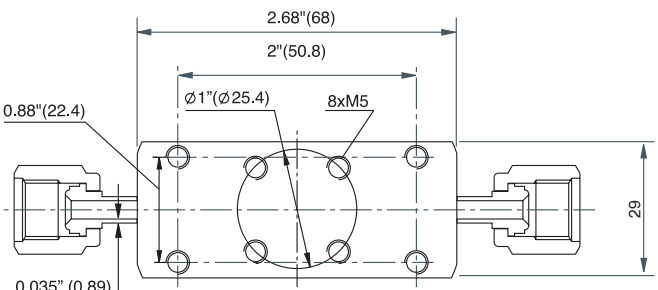

Bottom view - Panel mounting

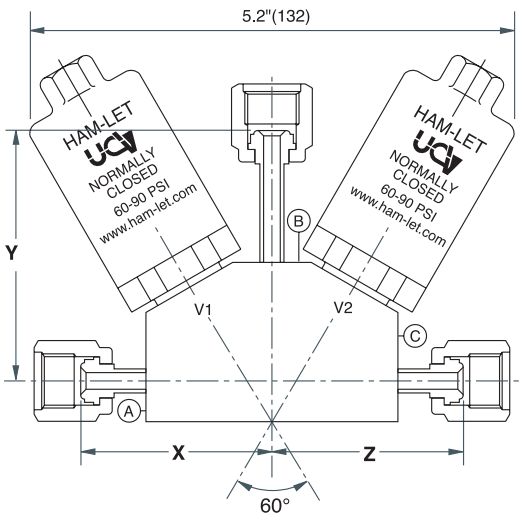

Front view

MATERIALS OF CONSTRUCTION - WETTED PARTS		
Item No.	**Part**	**Material**
1	Body	SS316L Var or Vim/Var(1)
2	Seat Holder	SS316L Var or Vim/Var(1)
3	Seat	PCTFE, *Vespel®
4	Diaphragm	Elgiloy

* Optional

UCV - HM SPECIFICATIONS	
Structure	Direct-seal metal-diaphragm valve without seal packing manually and pneumatically operated
Item Pressure	Vacuum to 150psi (10bar)/300psi (20 bar)
Operating Temperature: Standard	14 to 140°F, -10 to 60°C (PCTFE Seat)
Available	14 to 302°F, -10 to 150°C (*Vespel® Seat)
Leakage: Inboard Leakage	$\leq 3x11^{-9}$ atm cc He/sec
Outboard Leakage	$\leq 1x10^{-9}$ atm cc He/sec
Across the Seat Leakage	$\leq 1x10^{-9}$ atm cc He/sec
Particle	No particle detected above 0.1µm.
Connections	Face seal or tube weld
CV value	0.3
Surface finish Ra (Ave)- Standard	5 µin
Air Connection (Pneumatic)	1/8" NPT
Actuator air supply (Pneumatic)	60 to 90 psig (4 to 6 bar)

*Used with Viton O-ring

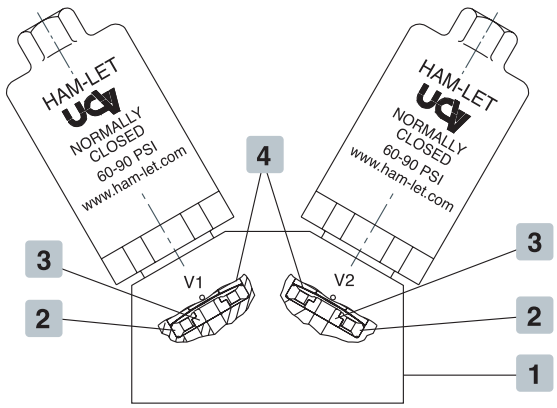

PANEL MOUNTING – STANDARD

Standard, eight threaded holes (M5).

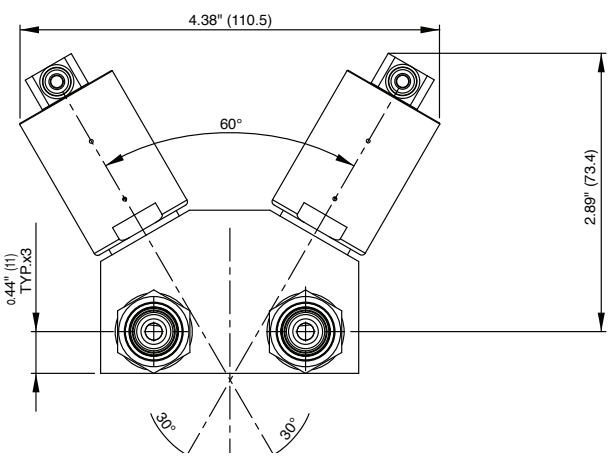

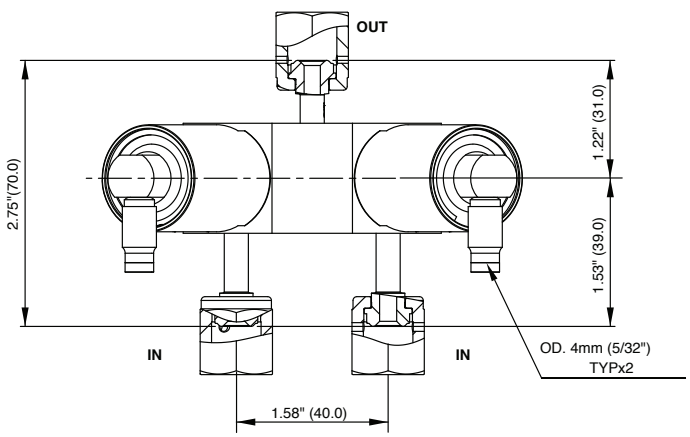

*Can also be used for reversed flow

(1) Per SEMI F20-0305

ORDERING INFORMATION

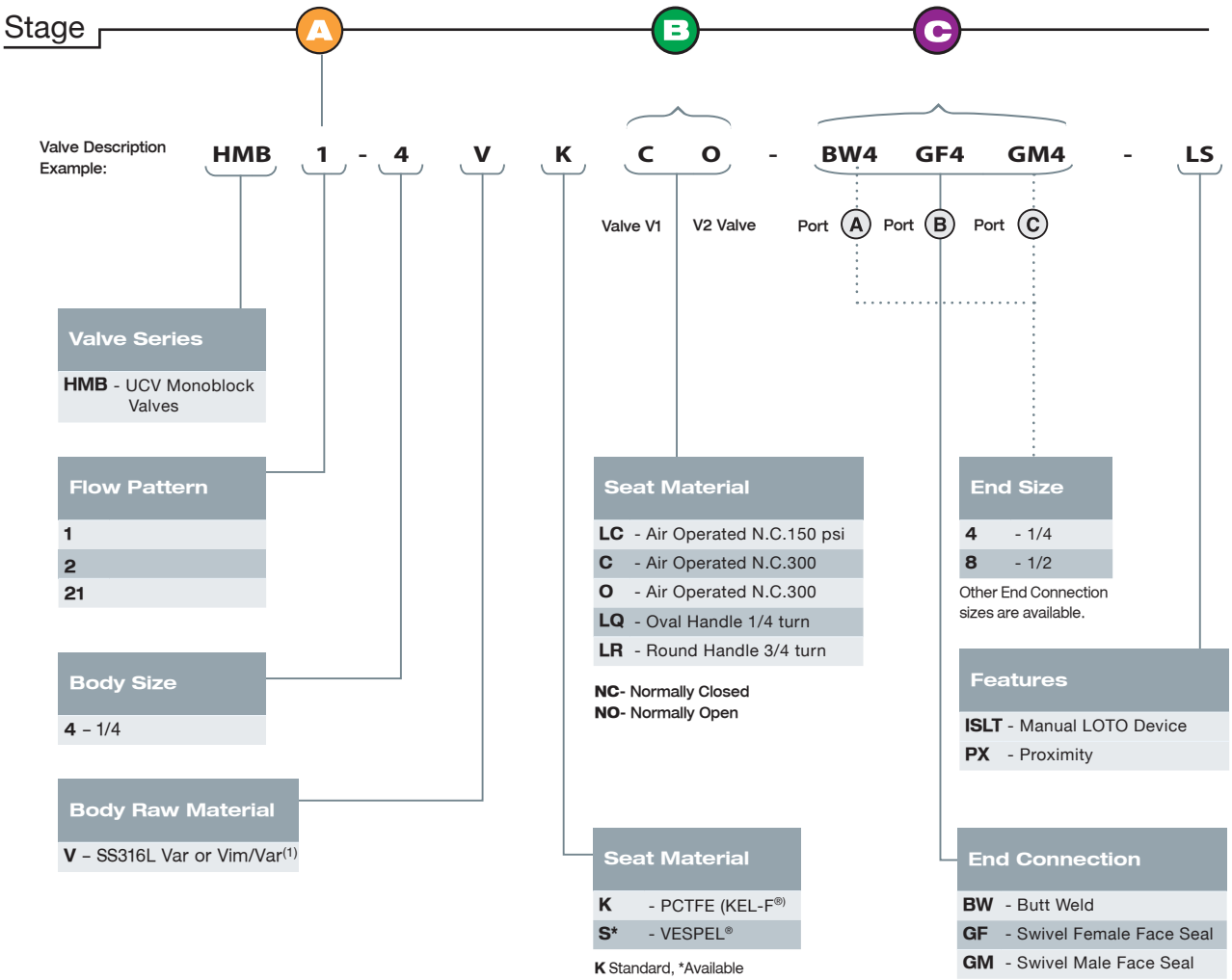

MATERIALS OF CONSTRUCTION - WETTED PARTS				
		HMB1 - 4VKCO - BW4GF4GM4		HMB2 - 4VSLQLQ - GF4*
Flow Pattern - Stage A	1	Flow Pattern - 1	2	Flow Pattern - 2
Body Size	4	1/4	4	1/4
Body Material	V	SS316L Var or Vim/Var(1)	V	SS316L Var or Vim/Var(1)
Seat Material	K	PCTFE	S	VESPEL®
Actuation device - Stage B	C	Valve V1 - Air Operated, Normally Closed	LQ	Valve V1 -Oval Handle 1/4 turn
	O	Valve V2 -Air Operated, Normally Open	LQ	Valve V2 -Oval Handle 1/4 turn
End connection - Stage C	BW	Port A Butt Weld	GF	Port A Swivel Female Face Seal
	GF	Port B Swivel Female Face Seal	GF	Port B Swivel Female Face Seal
	GM	Port C Swivel Male Face Seal	GF	Port C Swivel Female Face Seal
End Size	4	1/4	4	1/4

(1) Per SEMI F20-0305

* If the end connections are the same, use the end connection description only once.

Metal Diaphragm Valves

Standard models from the Ultra Clean Valve Series made to UHP specifications.
These models come with a connection joint size of 1/4" as standard.
The seat structure offers superb leak performance for enhanced reliability.

PART NUMBER / DIMENSIONS

Part Number/ep	Size	End Connection	A	B	C	D	E	F	G	H	I	J	K
2BEV4R-MV	1/4	Male HTC®	62.5	62.5	62.5	45	11	(53.5)	12	40	(53.5)	40	12
2BEF4R-MV	1/4	Male HTC®	62.5	62.5	62.5	45	11	(53.5)	12	40	(53.5)	40	12
2BEH4R-FV	1/4	Female HTC®	57.5	57.5	57.5	35	11	(53.5)	12	40	(53.5)	40	12
2BEV4C-FV	1/4	Female HTC®	57.5	57.5	57.5	35	11	(50)	12	40	(50)	40	12
2BEF4C-FV	1/4	Female HTC®	57.5	57.5	57.5	35	11	(50)	12	40	(50)	40	12
2BEH4C-MV	1/4	Male HTC®	62.5	62.5	62.5	45	11	(50)	12	40	(50)	40	12

SPECIFICATIONS

Size	Pressure	Temp.	Cv	Leak Rates Inboard	Leak Rates Across Seat
E 1/4	1MPa	-10 60°c	0.1	3×10^{-12} Pa m³/sec Helium	3×10^{-10} Pa m³/sec Helium
D 3/8			0.3		
H 1/2	16.2MPa		0.1		

STRUCTURE

	Parts	Material
1	Body	316L Stainless Steel
2	Seat	PCTFE
3	Seat Holder	316L Stainless Steel
4	Diaphragm	Ni-Co Alloy
5	Handle/Act	Aluminum

ORDERING INFORMATION

2B H V 4 C - MV

Specification	Flow Pattern	Size	Operation	End Connection
E - 1MPa	V - V-Flow	4 - 1/4	R - Round Handle	MV - Male HTC®
D - 1MPa	H - H-Flow		C - Normally Closed	FV - Female HTC®
H - 16.2MPa	F - F-Flow		O - Normally Open	

PORT DESIGNATOR– F

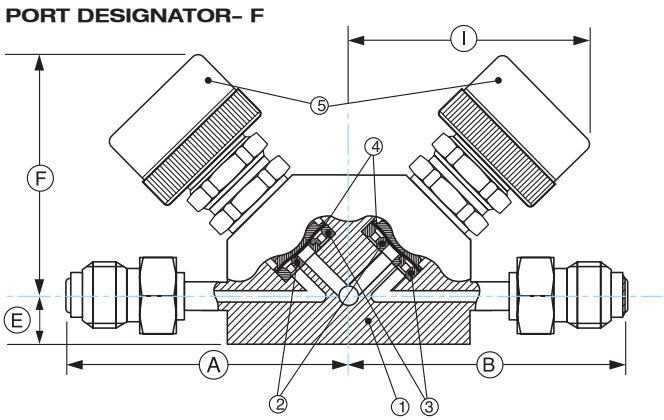

PORT DESIGNATOR– V

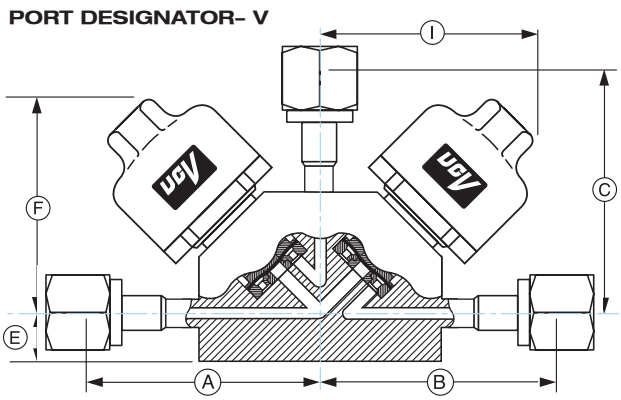

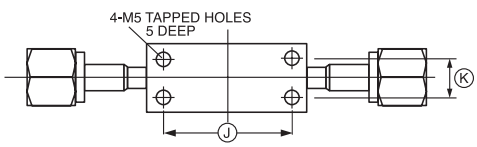

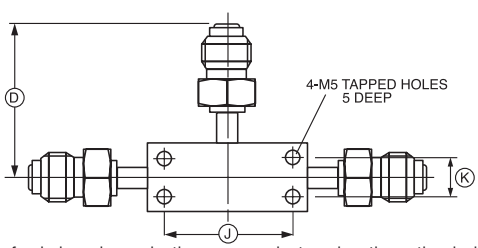

PORT DESIGNATOR

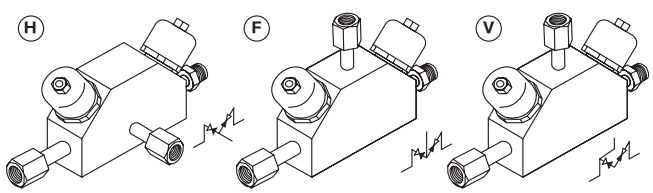

To make a safe choice when selecting your product, review the entire design of your system implementation to ensure safe, trouble-free system operations. Relevant system considerations should cover functionality, suitability of materials to specific applications and numeric data. Correct installation, handling and maintenance of valves is the responsibility of the systems designer and the user.

UCV HMB, Rev.04, July 2011

FLEXIBLE METAL HOSES

HAM-LET®
ADVANCED CONTROL TECHNOLOGY

A

B

C

D

E

F

G

H

STAINLESS STEEL METAL HOSES

The HAM-LET Flexible Metal Hose is designed to carry gases and liquids at elevated rates of pressure and temperature or high vacuum, in a vibrating environment or where flexibility is required.
The hose is composed from an inner hydroformed, corrugated thin-walled tube that is externally braided or unbraided for vacuum service. The flexible tube can be welded to a variety of fittings and connectors, allowing compatibility with industry interfaces.

TYPICAL INDUSTRIES

- Pulp & Paper Mills
- Chemical Industries
- Pharmaceutical Industries
- Semiconductor Industries
- Vacuum Applications

TYPICAL APPLICATIONS

- Temperature Extremes
- Chemical Compatibility
- Flexibility or Vibration
- Permeability Concerns
- Fire Safety
- Achieving Full Vacuum

MATERIALS

Tube: 321 Stainless Steel
316L Stainless Steel
316 Stainless Steel
Braid: 304 Stainless Steel

HOW TO SELECT

When selecting a Flexible Metal Hose, consider the following 5 variables:

1. Temperature
2. Dynamic pressure-carrying capability
3. Flexibility
4. Chemical compatibility
5. Optional accessories

Warning! For your safety

The system designer and user have the sole responsibility for selecting products suitable for their special application requirements, ensuring their safe and trouble-free installation, operation, and maintenance. Application details, material compatibility and product ratings should all be considered for each selected product. Improper selection, installation or use of products can cause property damage or personal injury.

1. TEMPERATURE

As the temperature increases, hose working pressure decreases. After you have determined the proper alloy (see “Chemical Compatibility” below), go to Table #2 “Working pressure de-rating factor” and match the alloy of the hose and braid with the highest temperature to which they will be exposed (either internally or externally) to obtain the proper de-rating factors. Then multiply the hose maximum working pressure by the most limiting temperature de-rating factor.

2. DYNAMIC PRESSURE

Pulsating, surge or shock pressures, like those encountered by quick opening or closing valves, can inflict severe damage on a hose. If your application entails pulsating pressures, the working pressure should be de-rated by 1/2. If your application entails shock pressures, de-rate the stated working pressure to 1/6 of its value.
Example : 1/4” hose - T316L stainless steel hose and T304 stainless steel braid at 300°F with the shock pressures:
Catalog Maximum Working Pressure = 1800 psi
Temperature De-rating Factor at 300°F = 0.86
Pressure De-rating Factor = 1/6
Maximum Application Working Pressure = 1800 PSI x 0.86 x 1/6 = 258 psi

3. FLEXIBILITY

Verify that the minimum bend radius of the hose is less than the bend radius required. Remember that the hose minimum bend radius will change with pressure. To determine the minimum bend radius refer to the chart in Table #1 for the type of hose you intend to use. Match the line for the hose I.D. with the pressure requirement of your hose to find the recommended bend radius for our hoses.

4. CHEMICAL COMPATIBILITY

The material that you choose for the hose and braid must be compatible with the media that will flow through the hose, as well as the environment in which the hose is installed. When determining chemical compatibility, be sure that you know the temperature and concentration of the chemical or chemicals. Although there are many resources to confirm chemical compatibility, two of the industry standards that you may find useful are the National Association of Corrosion Engineers (NACE) and the Compass Corrosion Guides.

5. ACCESSORIES

Optional accessories include spring guards, protective covers and insulating covers.

TABLE # 1 : TECHNICAL INFORMATION –MINIMUM BEND RADIUS (FOR HHF)

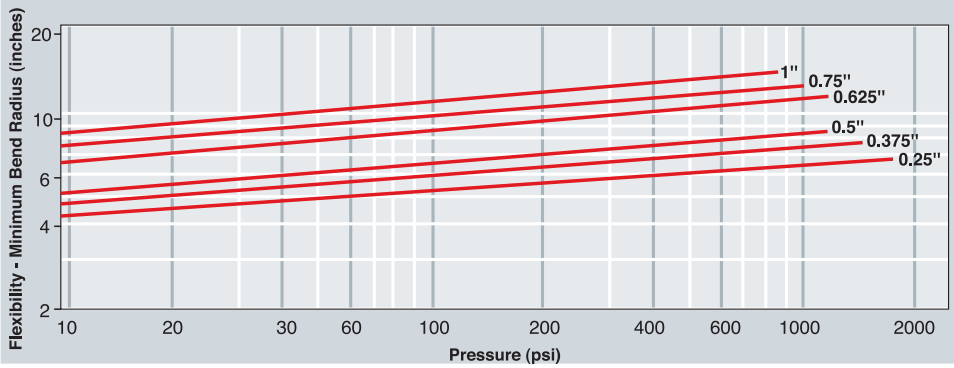

HOSE PARAMETERS

Products	ID	Tube Material	Braid Material	Allow Temp. (°F)	Max. Allow Work Press. at 70°F (psi)	Rated Impulse Pressure (psi)	Min. Burst Pressure (psi)	Min. Dynamic Bend Radius (in)	Min. Static Bend Radius (in)
Flexible Metal Hose HHF Series									
HHF 1/4	1/4	316L	304	1500	1800	900	7233	4.5	1.0
HHF 3/8	3/8	316L	304	1500	1558	779	6230	5.0	1.2
HHF 1/2	1/2	316L	304	1500	1186	593	4743	5.5	1.5
High Pressure Flexible Metal Hose HHFH Series									
HHFH 1/4	1/4		304	1500	4600	2300	18400	5.0	1.1
HHFH 3/8	3/8		304	1500	3800	1900	15200	5.5	1.4
HHFH 1/2	1/2		304	1500	2600	1300	10400	5.7	1.6
Vacuum Flex Hose HHV Series									
HHV 1/4	1/4	321	N/A	1500	90				
HHV 3/8	3/8	321	N/A	1500	70				
HHV 1/2	1/2	321	N/A	1500	70				

To calculate a working pressure de-rated for elevated temperatures, multiply the hose working pressure shown in the catalog by the appropriate de-rating factor shown in Table #2.
Note: The working pressure of an assembly at elevated temperatures may be affected by fitting type, material and method of attachment.

TABLE # 2 : WORKING PRESSURE DE-RATING FACTOR

Temperature In degrees F	321/316/316L	304
70	1.00	1.00
150	0.97	0.96
200	0.94	0.92
250	0.92	0.91
300	0.88	0.86
350	0.86	0.85
400	0.83	0.82
450	0.81	0.80
500	0.78	0.77
600	0.74	0.73
700	0.70	0.69
800	0.66	0.64
900	0.62	0.58
1000	0.60	
1100	0.58	
1200	0.55	
1300	0.50	
1400	0.44	
1500	0.40	

HH 5/2002 REV.1.3900145

SPECS: All Flexible Metal Hoses are manufactured in compliance with the **NAHAD** National Association of Hose and Accessories Distributors: **Standard ASC 001.01 Revised February 1996**

ORDERING INFORMATION

Material	Hose	Type	Size	End Connection	Size	Overall Length	Options
P - St.St.	HH	**F** - Flexible Metal	**1/4***	**LK** - LET-LOK®	**1/4**	**12***	**HLT** - Hellium Leak Test
		V - Flexible Metal- Vacuum	**3/8***	**GF** - Female Face Seal	**3/8**	**18***	**O2** - Oxygen Cleaning
		FH - Flexible Metal- High Pressure	**1/2***	**MP** - Male Pipe	**1/2**	**24***	
				GM - Male Face Seal		**36***	
				TS - Tube Stub			

* Standard Sizes and Lengths. Other Hose Sizes, Materials, End Connections and Lengths are available.

ALL HOSES ARE 100% FACTORY LEAK TESTED

Examples: P - HHF1/4 - LK1/4 - LK1/4 - 18 ■ SS - HHV3/8 - TS1/4 - TS3/8 - 24 ■ P - HHFH1/2 - GF1/2 - GF1/2 - 36 - HLT

TEFLON® FLEXIBLE HOSES

STAINLESS STEEL BRAIDED
TEFLON® FLEXIBLE HOSES HHT&HHTS SERIES

HAM-LET®
ADVANCED CONTROL TECHNOLOGY

GENERAL

The Teflon® hose is the ideal solution for permanent or temporary connections. It makes fabrication easier, and it facilitates connect/disconnect and cleaning. Variable length, high flexibility, high pressures and broad chemical compatibility are among the features that make this hose suitable for any application. HAM-LET Teflon® hoses are available in single stainless-steel braid or double–fiberglass & stainless-steel braid.

TECHNICAL DATA

Hose diameters available: 1/4, 3/8, 1/2, 3/4, 1”
Pressure rating: 1000 through 3200 psi (70 ~ 220 bar)
Temperature rating: -100° ~ +450° F (-73° ~ + 232°C)
End connectors available: LET-LOK®, ONE-LOK®, Male & Female Face-Seal, Male NPT, Mini and Standard Sanitary Flange.

WHERE CAN A TEFLON® HOSE BE USED?

Almost anywhere! It can handle high pressures; it withstands hundreds of thousands of flex cycles; it is unaffected by weather or age; and it conveys almost any media. Teflon® is non-stick and temperature resistant. Steam clean/sterilization cycles are practically not limited.
There is no material with a broader range of chemical compatibility than Teflon®. The only known classes of chemicals that attack Teflon® are molten alkali metals such as Sodium, Lithium, and Potassium. Halogenated chemicals such as fluorine gas or chlorine tri-fluoride are not recommended because certain Halogen compounds such as Freon can permeate (diffuse) through tubing of Teflon®.

Chemical compatibility:

Teflon® has one of the highest levels of chemical compatibility. Following is the list of materials that require some level of consideration:

The following materials are not recommended for use with Teflon® hosing:

- Elemental Sodium
- Elemental Potassium
- Elemental Lithium

The materials listed below are only questionable if conveyed in conjunction with high temperature and pressure and/or a combination thereof:

- Fluorine (F2)
- Chlorine Tri-Fluoride (CIF3)
- Borane (B2H6) (Only at 400°F to 500°F)
- Iodine Pentafluoride
- Oxygen Difluoride
- Chlorine Difluoride
- 80% and over Sodium Hydroxide
- Bromine (B2H6) - only at 400°F to 500°F
- Aluminum Chloride (at elevated temps)
- Ammonia (NH3)
- Aluminum (R-NH2) - at elevated Temperature
- Imines (R-NH)
- 70% Nitric Acid
- 80% Sodium Hydroxide

TEFLON® is a Registered trademark of Dupont

HAM-LET TEFLON® HOSE FEATURES:

Basic Structure:

HHT-Stainless Steel Braided

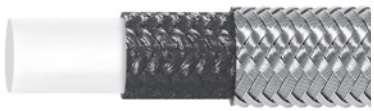

WALL THICKNESS					
Size	1/4”	3/8”	1/2”	3/4”	1”
Wall	0.043	0.043	0.050	0.052	0.052

High Flexibility

- The highest flexibility available in sizes 1/2”, 3/4” and 1” inside diameter
- Tighter bends are possible - more ‘true’ application use without damage
- Less force-to-bend - hose does not flatten in the bend area, thus is not susceptible to kink or vacuum collapse.

Full Size Inside Diameter:

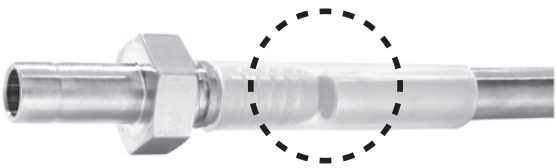

- Not tube size!
- 1/4” is 0.250 (1/4”) inside diameter - not 0.187 (3/16”) id and 1/2” is 0.500 (1/2”) not 0.406 (13/32”)
- HAM-LET hose yields the highest flow rate per size because of its full size tube so fittings can be machined with a bigger inside diameter; a diameter that mates identically with connected tubing.

The result is minimal or no pressure drop due to dimensional differences. The internal surface of the fitting can be machined with no steps, which is where corrosion starts, bacterial growth begins, flow is disrupted.

HAM-LET hoses are made of Dupont Teflon® T-62 as its core resin material. This particular resin has superior flex characteristics, and thus better kink resistance.

T-62 is validated for high purity service.

1. Approved U.S. Pharmacopoeia Class VI
2. Approved Food and Drug Administration (FDA) 21CFR177.1550
3. Exceeds 3A Sanitary Standards
4. U.S.D.A. Approved

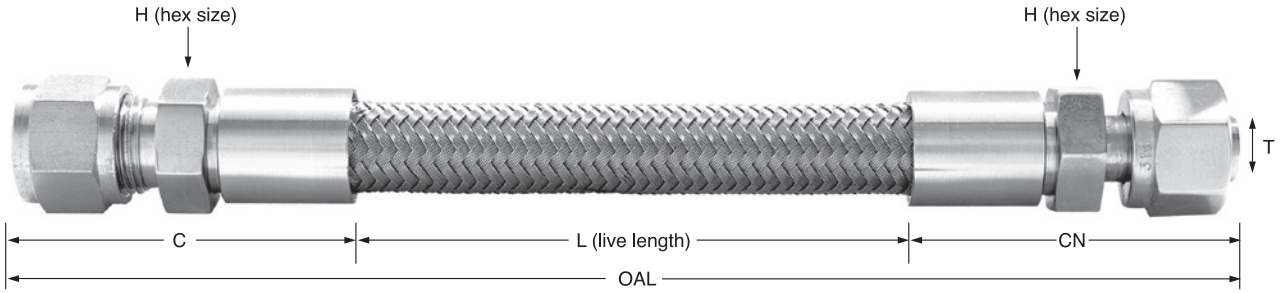

WALL THICKNESS										
HAM-LET Part No.	Inside Diameter		Outside Diameter		M.A.W.P.*		Minimum Bend Redius		Weight Per	
	in	mm	in	mm	psi	bar	in	mm	LBS/FT	KG/METER
HHT 1/4''	0.25	6.4	0.45	11.4	3200	220	1.5	38	0.10	0.015
HHT 3/8''	0.37	9.4	0.71	18.0	2500	172	2.0	51	0.12	0.18
HHT 1/2''	0.50	12.7	0.89	22.6	1800	138	3.0	76	0.16	0.24
HHT 3/4''	0.75	19.0	1.12	28.4	1500	103	3.5	89	0.46	0.68
HHT 1''	1.00	25.4	1.55	39.4	10 00	69	5.5	140	1.09	1.62

* 1. Proof pressure = 2xM.A.P
2. Burst pressure = 4xM.A.P

END CONNECTOR DIMENSIONS							
Hose Size	Minimum Flow Diameter	T Diameter	A Length	An Length	C Length	Cn Length	H Hex Size
in	in	in	in	in	in	in	in
1/4	0.190	1/4	1.48	1.70	1.73	1.70	0.562
3/8	0.280	3/8	1.78	2.00	2.08	2.00	0.687
1/2	0.375	1/2	2.07	2.53	2.48	2.53	0.875
3/4	0.630	3/4	2.50	3.04	2.81	3.04	1.125
1	0.860	1	2.75	3.28	2.96	3.28	1.375

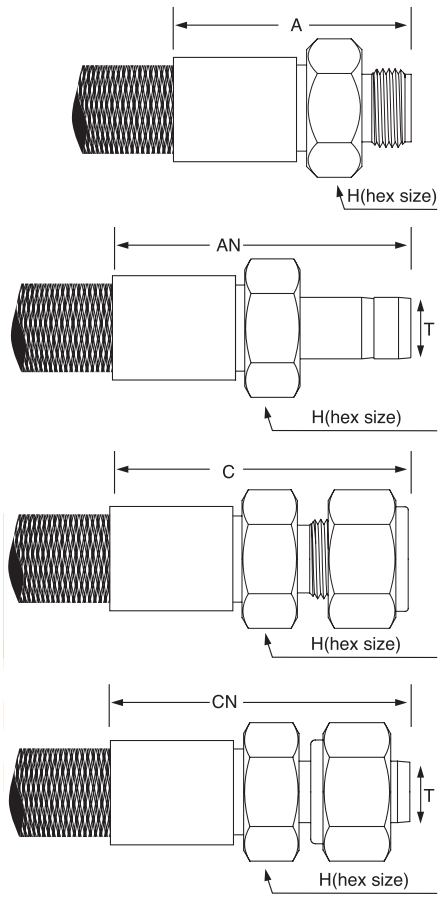

PACKAGING

Each hose is cleaned and packed in a PP bag individually.

ORDERING INFORMATION

Material	Hose	Type	Size	1 st. End Connection	Size	2 st. End Connection	Size	Overall Lenght
P	HH	T - Braided	1/4	LK - LET-LOK®	1/4	LK - LET-LOK®	1/4	
			3/8	HL - ONE-LOK®	3/8	HL - ONE-LOK®	3/8	
			1/2	TS - Tube Adaptor	1/2	TS - Tube Adaptor	1/2	
			3/4	MP - Male pipe NPT	3/4	MP - Male pipe NPT	3/4	
			1	LF - Sanitary Flange	1		1	

OPTIONAL

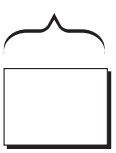

C - Conductive Hose

HAM–LET SAMPLE CYLINDER

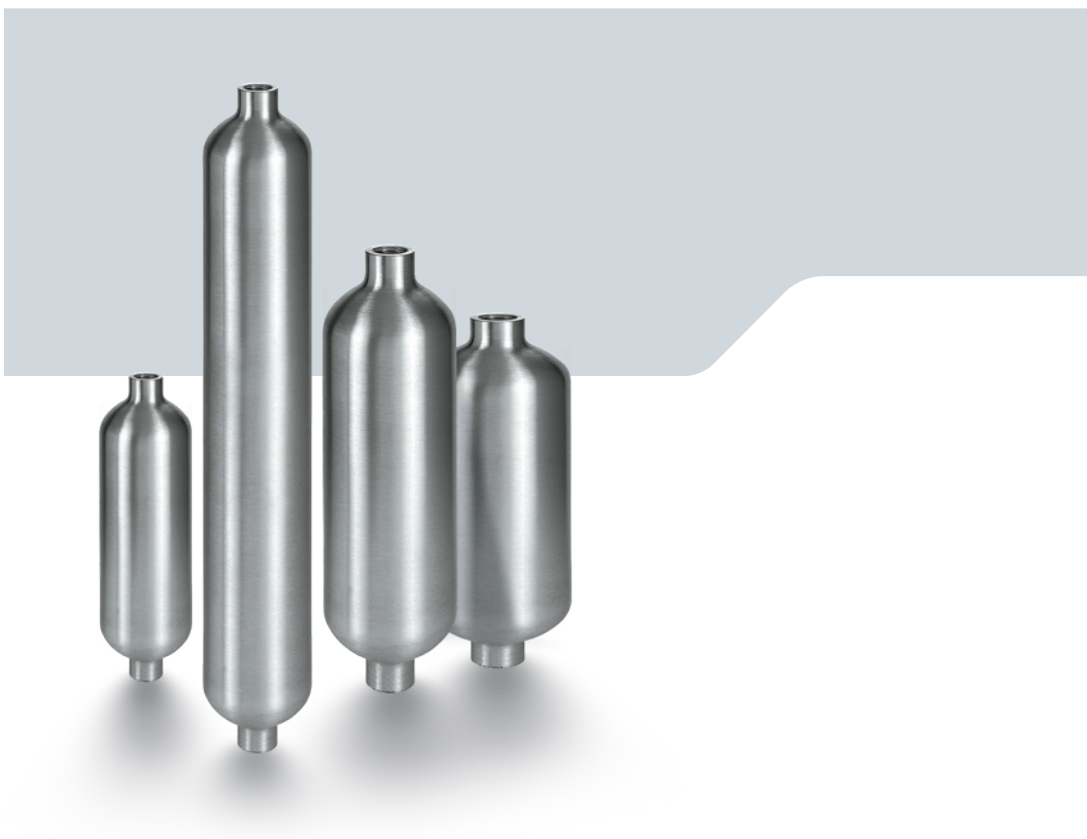

HAM-LET®
ADVANCED CONTROL TECHNOLOGY

APPLICATION:

Sampling Cylinders permit the extraction of a sample from a remote process location and provide safe containment for storage and transportation to the laboratory for analysis. These cylinders are rated to 1800 psi at room temperature for liquids and gases. Some applications include hydrocarbon sampling in refineries, gas sampling in chromatography and condensate sampling in fossil-fuel and nuclear-power plants. In similar applications, petrochemical facilities and gas processing plants utilize sample cylinders. Pressure surge accumulators or reaction vessels are other common uses for sample cylinders.

PROPERTIES: TABLE 1

No.	Description	Material	Pressure Rating (psi)	DOT Stand	Min. Volume	Max. Weight	B	OAL	SND	Thread (NPT)	O.D.	W.T.
1	HSSC15-1AH	St.St.304	1800	3E	50 CC (3.05 IN³)	0.5 LBS	1.64''	3.80''	0.72”	1/4-18	1.5”	0.083”
2	HSSC15-2AH				75 CC (4.6 IN³)	0.6 LBS	2.72''	4.88''				
3	HSSC15-3AH				150 CC (9.2 IN³)	1.0 LBS	6.09''	8.25''				
4	HSSC15-1BH	St.St.316			50 CC (3.05 IN³)	0.5 LBS	1.64''	3.80''				
5	HSSC15-2BH				75 CC (4.6 IN³)	0.6 LBS	2.72''	4.88''				
6	HSSC15-3BH				150 CC (9.2 IN³)	1.0 LBS	6.09''	8.25''				
7	HSSC15-4BH				150 CC (9.2 IN³)	1.0 LBS	6.09''	8.25''	0.85''	3/8-18		
8	HSSC20-1AH	St.St.304			300 CC (18.3 IN³)	1.8 LBS	6.79''	9.25''	0.74''	1/4-18	2”	0.095”
9	HSSC20-2AH				500 CC (30.5 IN³)	2.5 LBS	11.42''	13.88''	0.74''			
10	HSSC20-1BH	St.St.316			300 CC (18.3 IN³)	1.8 LBS	6.79''	9.25''	0.74''			
11	HSSC20-2BH				500 CC (30.5 IN³)	2.5 LBS	11.42''	13.88''	0.74''			

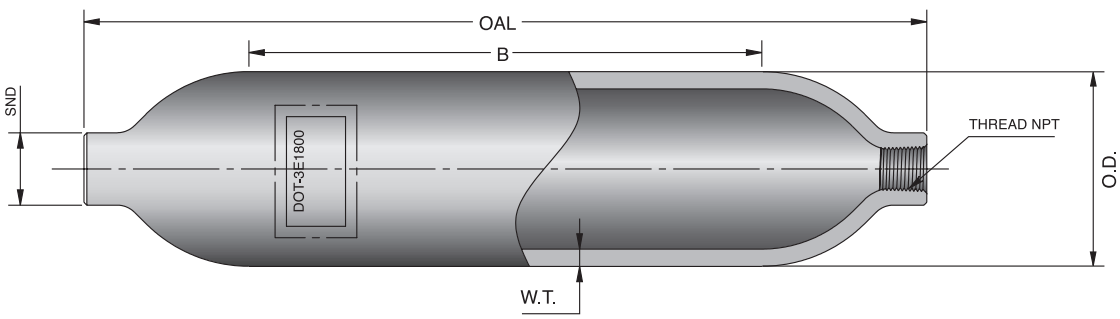

Transportation Specifications: **DOT-3E1800 per 49CFR 178.42**

Material Traceability

Raw material is heat code traceable. This traceability follows each cylinder through manufacture, heat treating, cleaning and pressure testing.

Cylinder Manufacturing Standards

DOT CFFC, FRP-1, FRP-2, 3A, 3AA, 3AL, 3E, 3HT, 39, NGV2, FMVSS, HSE FW1/FW2, TUV, KHK, MIL-C-7905, MS26545, MIL-R-8573, EN1975, 12245 and others.

Approval of T.P.E.D. { Transportation Pressure Equipment Directive} is imminent.

Applicable Valves with Sample Cylinders

HAM-LET H-300 Needle Valve Series

Notes:

1. Dimensioning and tolerancing per ANSI Y 14.5M.
2. Cylinder manufactured and inspected in accordance with DOT ‘49 CFR 178.42 Specification 3E.
3. Material: seamless cold-finished stainless steel tubing per ASTMA269. (See table 1 for grade specification.)
4. Lot size 500 cylinders.
5. Heads formed using spinning process.
6. Sandblast inside surfaces.
7. Thread ends per ANSI B1.20.1.
8. Part free of grease, machine oil & other debris inside and out. Acid wash and rinse with deionized water.
9. Rotation sand entire cylindrical outer surface to finish 32µInch.
10. Destructive acceptance criteria (one cylinder per lot) per DOT 3E: - Cylinder burst between 6,000 and 12,000 psi without fragmentation; or -Cylinder holds 12,000 psi for 30 seconds without burst, and withstands flattening test to six times wall thickness without cracking.
11. Non-destructive acceptance criteria (all cylinders) per DOT 3E: hydrostatic proof test at 3,000 +100/- 0 psi for 30 seconds minimum without failure or evidence of defect.
12. Minimum water volume: see table 1.
13. Maximum cylinder weight: see table 1.
14. Cylinder operating pressure: 1800 psi.

INSTALLATION INSTRUCTIONS

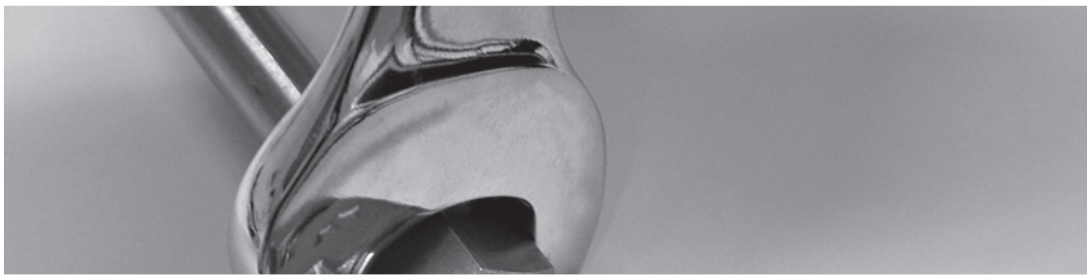

HAM-LET®
ADVANCED CONTROL TECHNOLOGY

INDEX INDEX

LET-LOK TUBE FITTINGS **389**
1/16" through - inch
2 mm through 25 mm - metric

ONE-LOK TUBE FITTINGS **390**
1/4",3/8", 1/2", 3/4" 1"

PIPE LINE **391**
Precision instrumentation pipe fitting

HTC **391**
Hi-tech components

H300 SERIES **392**
Needle valves

H400 SERIES **393**
Check valves

H500 SERIES **394**
3-Piece ball valves

H700 SERIES **396**
Ball valves with locking device

H6800 SERIES **397**
Instrumentation ball valves

H900 SERIES **398**
Relief valves

H900-HP SERIES **402**
High pressure relief valves

H600 SERIES **406**
T-type & in-line filters

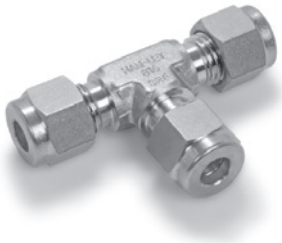

LET-LOK® TUBE FITTINGS

1/16" through 1" - Inch, 2 mm through 25 mm - Metric

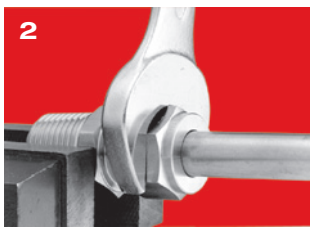

LET-LOK® fittings are supplied assembled, finger tight. Diassembly before use can allow the entry of dirt or other particles.

1. Insert the tubing into the LET-LOK® fitting.
Check that the tube rests firmly on the fitting shoulder and that the nut is finger tight.

2. Tighten the nut.
1 1/4 turns of the nut are required for 1/4" (6 mm) and higher. (See Figure A.) 3/4 of a turn of the nut are required for 3/16" (4 mm) and lower. (See Figure B.)

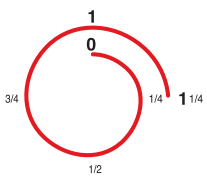

Figure A

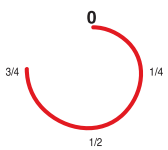

Figure B

Reassembly Instructions

LET-LOK® connections may be disconnected and remade repeatedly without loss of the leaktight seal.

1. Before disconnecting, mark the position of the nut in relation to the fitting body.
2. To reassemble, use a wrench to tighten the nut to original position.
3. Tighten slightly with a wrench until you feel a slight rise in torque.

Tube Cutting

There are two ways to cut tubes:

1. Tube cutter
2. Hacksaw

Tube Cutter

To attain a leak-free connection, cut the tubing squarely. Use a good quality tube cutter with the appropriate blade for the tubing.
Do not try to reduce the time of cutting by taking deep cuts with each turn of the cutter. This will work harden the tube.
Deburr the end of the tube to avoid damage to the fitting and to ensure that the tube reaches the bottom of the fitting.

Hacksaw Cutting

In order to cut the tube with a hacksaw and get square ends, cut the tube with guide blocks.
If you use this method of cutting, you will need to deburr the tube ends.

Warning!

Do not hold the tube in a vise at the place where it will be inserted into the fitting (the vise will leave a mark on the tube that may cause leaks, and might cause ovality).

Tube Handling

Scratches on the tube might cause leaks. Therefore, use caution in handling the tube in order to reduce the possibility of leaks.

Some precautions to be taken:

1. Tubes must not be dragged on the floor.
2. Tubes must not be dragged out of a tubing rack, especially in case of large OD tubes.

Copper Tubing

If you use copper tubing on a ro, be sure to hold the end of the tube, then, move the tubing away from you, so that it can lie on a flat surface.

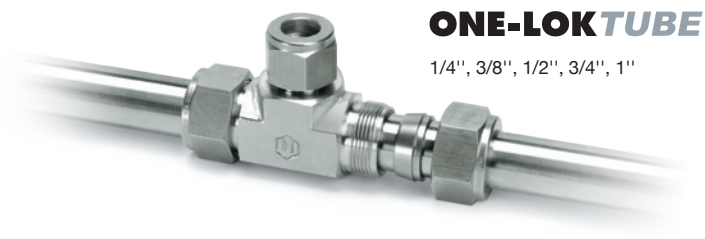

ONE-LOK *TUBE FITTINGS*

1/4'', 3/8'', 1/2'', 3/4'', 1''

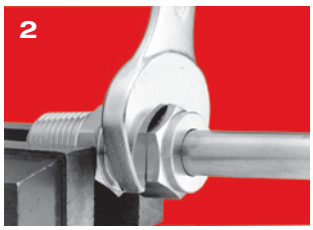

ONE-LOK® fittings are supplied assembled, finger tight. Diassembly before use can allow the entry of dirt or other particles.

1. Insert the tubing into the ONE-LOK® fitting.
Check that the tube rests firmly on the fitting shoulder and that the nut is finger tight.

2. Tighten the nut.
1 1/4 turns of the nut are required.
(See Figure A.)

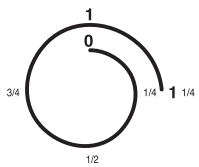

Figure A

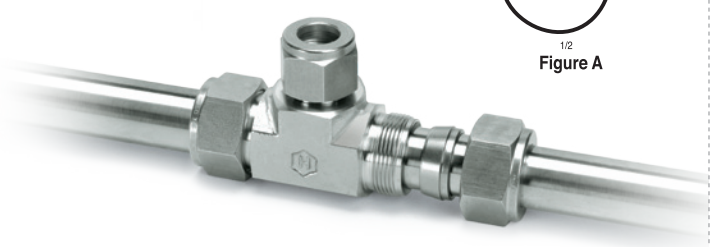

Reassembly Instructions

ONE-LOK® connections may be disconnected and remade repeatedly without loss of the leaktight seal.

1. Before disconnecting, mark the position of the nut in relation to the fitting body.
2. To reassemble, use a wrench to tighten the nut to original position.
3. Tighten slightly with a wrench until you feel a slight rise in torque.

Tube Cutting

There are two ways to cut tubes:

1. Tube cutter
2. Hacksaw

Tube Cutter

To attain a leak-free connection, cut the tubing squarely. Use a good quality tube cutter with the appropriate blade for the tubing.
Do not try to reduce the time of cutting by taking deep cuts with each turn of the cutter. This will work harden the tube.
Deburr the end of the tube to avoid damage to the fitting and to ensure that the tube reaches the bottom of the fitting.

Hacksaw Cutting

In order to cut the tube with a hacksaw and get square ends, cut the tube with guide blocks.
If you use this method of cutting, you will need to deburr the tube ends.

Warning!

Do not hold the tube in a vise at the place where it will be inserted into the fitting (the vise will leave a mark on the tube that may cause leaks, and might cause ovality).

Tube Handling

Scratches on the tube might cause leaks. Therefore, use caution in handling the tube in order to reduce the possibility of leaks.

Some precautions to be taken:

1. Tubes must not be dragged on the floor.
2. Tubes must not be dragged out of a tubing rack, especially in case of large OD tubes.

Copper Tubing

If you use copper tubing on a ro, be sure to hold the end of the tube, then, move the tubing away from you, so that it can lie on a flat surface.

PIPELINE

HAM–LET PRECISION INSTRUMENTATION PIPE FITTINGS

To ensure a leak-tight seal, HAM-LET recommends that you use a pipe-thread sealant on all NPT threads. The most effective sealing method is teflon tape. Tape should be used only on male tapered pipe threads.

Do not use tape on flared, coned or tube fitting ends!

Clean both male and female tapered threads. Wrap tape in the direction of the male tapered thread spiral.

Note: We suggest two wraps for stainless-steel tapered pipe threads. Make sure tape does not overhang the first thread. Otherwise, tape could shred and enter into the fluid system. Cut off excess tape.

The connection is now ready for proper makeup.

HTC

HI–TECH COMPONENTS

MAKE UP OF GLANDS

- Glands offer a high-purity metal to metal seal for leak-free service in high-vacuum or high-pressure assemblies.
- The gasket is compressed by two highly polished beads when the male and female nuts are engaged.
- The gland bead-to-bead assembly compresses a soft-metal gasket-to-seal. This assembly can be locked by HAM-LET Grip-Kit (See A below).
- Visual test and leak testing are performed through two test ports in opposite locations from the female nut.

ASSEMBLY INSTRUCTIONS

1. Be sure to protect all HTC face-seal fittings until assembly and make up. Exercise great care that the sealing surfaces are not scratched, damaged or contaminated in any way during handling and assembly.

2. Always use a clean environment, and always employ proper clean-room protocol for make up and assembly of high-purity fittings and applications.

3. Make up instructions:

Tighten the female nut to the male nut/body finger tight.
Tighten the female nut 1/8 turn past finger tight.
Always torque the female nut while keeping the male nut/body stationary.
Face seal connections are remakable - please use a new gasket for each remake.

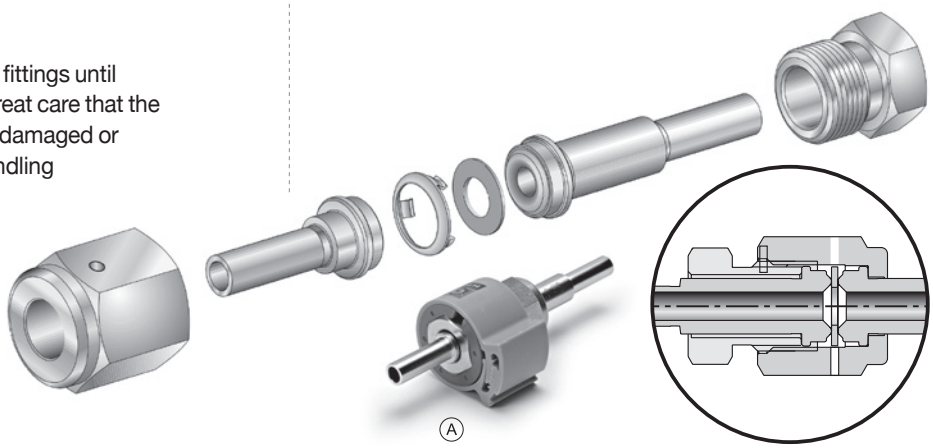

H-300 SERIES
NEEDLE VALVES

1. Use
For maximum valve life, use the valve only within the stated pressure and temperature range, and in accordance with the corrosion resistance of the material.

2. Operation
To open the valve, rotate the handle until it comes in contact with the lower gland. This will allow maximum flow through the valve.
To close the valve, rotate the handle until the stem tip comes into contact with the seat.
Do not use excessive force when closing the valve. Excessive torque applied to the handle may damage both seat and stem tip, particularly the soft seat option.

3. Cleaning the Valve
Liquids can be trapped within the valve.
If the valve has been used with hazardous media, it must be de-contaminated before disassembly.
All personnel involved in the removal and disassembly of the valve should wear appropriate protective clothing, such as face shields, aprons, gloves, etc.

4. Replacing seat and stem seals
If there are signs of leakage through the stem area, and further adjustment is not possible, replace the stem seal.
If there are signs of leakage across the seat, replace the stem.

Warning! For Your Safety
The system designer and user have the sole responsibility for selecting products suitable for their special application requirements, ensuring their safe and trouble-free installation, operation, and maintenance. Application details, material compatibility and product ratings should all be considered for each selected product. Improper selection, installation or use of products can cause property damage or personal injury.

5. Procedures
Disassembly
With the valve clamped firmly in a vise:
- Remove the set screw (2) with the appropriate Allen wrench, and remove the handle (1).
- Remove packing nut (3).
- Rotate stem counter clockwise until stem is free from the body.

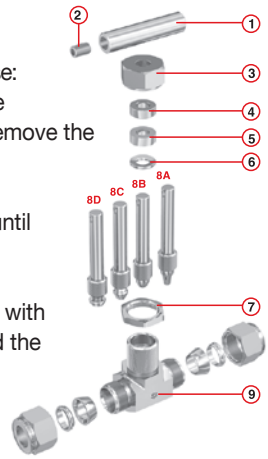

Note: The stem will be complete with upper gland (4) the packing (5) and the lower gland (6).
- Clean and inspect all metal parts for nicks, scratches, etc., particularly the stem tip and the valve seat. Discard any parts that are damaged, and replace them with authorized HAM-LET parts.
- Discard the stem packing and replace it with authorized HAM-LET parts.

Re-assembly
Reverse steps above, taking care to lubricate all parts with an appropriate lubricant.

Note: Factory valves are tested at 1,000 psig using N2. No leakage from seat or stem is allowable after 1 minute with the valve immersed in water.

6. Installation
Threaded Valves
- On taper threads, use a conventional thread sealant such as Teflon tape or an appropriate alternative that is compatible with the application.
- Apply a wrench to the body and connecting nut. Do not use the handle to tighten the connection.

LET-LOK® Valves
- Ensure the tubing is cut square and that it is de-burred.
- Ensure the tubing is located firmly in the connection.
- From the finger-tight position, rotate the nut a full 1 1/4 turn.

Note: For sizes 3/16 inch (4mm) or less, rotate the nut 3/4 turn only.
- Apply a wrench to the body and connecting nut. Do not use the handle to tighten the connection.

H-400 SERIES
CHECK VALVES

1. Use
For maximum valve life, use the valve only within the stated pressure and temperature range, and in accordance with the corrosion resistance of the material. Give particular attention to the compatibility of the O-ring material.

2. Disassembling and Cleaning the Valve
A non-return valve can trap fluids within the body. If the valve has been used in hazardous media service, remove with great care and take appropriate decontamination measures.

All persons involved in the removal and disassembly of the valve should wear proper protective clothing, such as gloves, aprons, face shields, etc.

3. Replacing Seats, Seals and Springs
H-400 valves are designed to give optimum life. Should the valve reveal leaks across the seat:

A. Place the body securely in a vise, holding on the hexagon flats.
With an appropriate size wrench, unscrew the end.
Remove the upper (body) and poppet O-rings.
Clean and dry all parts, taking particular care that the seat is not damaged.

B. To rebuild the valve:
Replace O-rings. Lubricate the threads and outer surface of the poppet with Halocarbon 27 oil, or an alternative as appropriate for the flowing medium.
Reassemble poppet and spring into the body.
Reassemble the end to the body using a torque wrench set to 20 ft. lb (50 NM).

C. Should the valve exhibit opening at less than the stated cracking pressure, follow steps 3A and 3B, replacing the spring with a factory-supplied component.

4. Testing
Test all valves for functionality before placing them into service.

Using clean, dry nitrogen, pressurize inlet of valve to cracking pressure. Acceptance criterion: valve does not pass nitrogen at ± 20% of cracking pressure when immersed in water for one (1) minute.

Using clean, dry nitrogen, pressurize the outlet of the valve to 2000 psig.

Acceptance criterion: no leakage from the body/end connection when it is immersed in water for one (1) minute.

5. Installation
Apply wrench on hexagon adjacent to the end being connected. Do not grip the body with vise grips or similar tools.

Warning! For Your Safety
The system designer and user have the sole responsibility for selecting products suitable for their special application requirements, ensuring their safe and trouble-free installation, operation, and maintenance. Application details, material compatibility and product ratings should all be considered for each selected product. Improper selection, installation or use of products can cause property damage or personal injury.

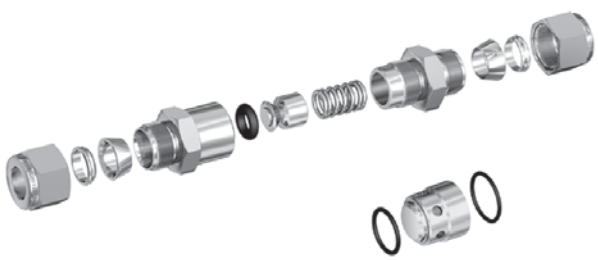

H-500 SERIES
3–PIECE BALL VALVES

1. Use:

1.1 For maximum valve life, use the valve only within the stated pressure and temperature range, and in accordance with the corrosion resistance of the material. Give particular attention to the compatibility of the O-ring material.

2. Manual Operation

2.1 To open or close the valve, turn the handle 1/4 turn (90 degrees).

A. When the valve is in Open Position, the handle is parallel (in-line) with the valve or pipeline.

B. When the valve is in Closed Position, the handle is perpendicular (crossed) to the valve or pipeline.

3. Automated Operation

3.1 Check any valve with an actuator for valve-stem alignment. Angular or linear misalignment will result in high operational torque and unnecessary wear on the stem seal.

4. Disassembling & Cleaning the valve:

A ball valve can trap fluids in ball cavity when it is in the closed position. If the valve has been used in hazardous medium, decontaminate it before disassembly.

A. Relieve the line pressure.

B. Place the valve in half-open position and flush the line to remove any hazardous material from the valve.

C. All persons involved in the removal and disassembly of the valve should wear proper protective clothing, such as face shields, gloves, aprons, etc.

5. Replacing Seats, Joint Gaskets, Stem Seal and Stem Packing

Model H-500 is designed with Belleville washers for automatic seal wear compensation. If there is any sign of leakage from the stem, replace the stem packing and the stem seal. If there is any sign of internal leakage, replace the ball seats.

5.1 When replacing the seats and joint gaskets, refer to the assembly diagram.

A. Follow the above Disassembling & Cleaning Instructions (number 4, above). Make sure the pipeline is de-pressurized.

B. With the valve in the open position (lever parallel to the axis of the pipe), loosen all the nuts on the body bolting. Remove all the bolts except one. Swing the body outside the pipe.

C. Turn the handle to the half-open position to assist in the removal of the seats.

D. Replace with a new set of seats and joint gaskets.

E. Swing the body back into position. Replace the removed bolt, and tighten the bolts according to the Bolt Tightening Specification Table on the next page.

5.2 When replacing the stem seal, and stem packing, refer to the assembly diagram.

A. Follow the direction for replacing the seats and joint gaskets from 5.1.A to 5.1.C.

B. To assist in loosening the stem nut, place a rod of diameter smaller than the ball orifice into the ball orifice. Loosen and remove the top stem nut with a wrench. Remove the stem washer, handle and lock saddle. Place all removed parts in a clean and secure place.

C. Loosen and remove the second stem nut with a wrench.
Remove the set of Belleville washers. Place all removed parts in a clean and secure place.

D. Remove the rod. Turn the valve to the closed position (handle perpendicular to the pipeline). Remove the seats and gaskets. The ball should slide out with a gentle push. Place all removed parts in a clean and secure place.

E. Push the stem downward. It should come out through the center body. Remove the stem then remove the stem seal.
Thoroughly clean the stem. Replace it with a new stem seal.

F. Remove the stem packing from the center body cavity. Thoroughly clean the center body. Insert a new stem packing.

G. Replace the stem, the Belleville washers and the gland. Replace the first stem nut. To tighten the nut, hold the stem in place and tighten the nut with a wrench. When tightening the stem nuts, make sure they are snug and the Belleville washer is compressed to the maximum extent.
Replace the lock saddle, the stem handle, the stem washer and the top stem nut.
Tighten the top stem nut with a wrench.

H-500 SERIES
3-PIECE BALL VALVES

H. Turn the valve to the closed position (handle perpendicular to the pipeline). Replace the ball. Turn the valve to the open position (handle parallel to the pipeline).
Replace the seats and joint gaskets.

I. Swing the center body back into position. Replace the removed bolts and nuts. Tighten the nuts according to the Bolt Tightening Specification Table.

6. General Information for On-Site Installation:

6.1 The valve may be fitted in any position on the pipeline.

6.2 To prevent damage to the seats and ball surface, make sure the pipeline is flushed, free of dirt, burrs and welding residues before installing the valve.

7. Installation of Threaded Valves

7.1 Use a conventional sealant, such as hemp core, Teflon, etc.

7.2 Apply a wrench to the hexagon end of the valve only. Tightening by using the valve body or handle can seriously damage the valve.

7.3 For applications where the screwed end valves are back-welded on site, dismantle these valves according to the instructions for weld end valves.

8. Installation of weld end valves

8.1 Tack-weld the valve onto the pipe in four points on both end caps.

8.2 With the valve in open position (lever parallel to the axis of the pipe), loosen all the nuts on the body bolts.
Remove all the bolts except one.
Swing the body outside the pipe.

8.3 Turn the handle to the half-open position to assist in the removal of the seats and joint gaskets.

8.4 Turn the handle to the closed position and remove the ball.

8.5 Place all removed parts in a clean and secure place.

8.6 Replace the body and the removed bolt. Tighten all nuts slightly.
To prevent any leakage to the body joints after welding, make sure that the body and the end caps remain perfectly parallel.

8.7 Finish welding both end caps onto the pipe.

8.8 After the pipeline and valve cool, clean the end caps, then remove the previous, and replace bolt.
Swing out the body.
Turn the valve to the closed position, then replace the ball. Turn the valve to the open position and replace seats and joint gaskets.

8.9 After you have replaced the seats, joint gaskets and ball, swing the body into position, replace the removed bolts and nuts, and tighten the nuts according to the Bolt Tightening Specification Table.

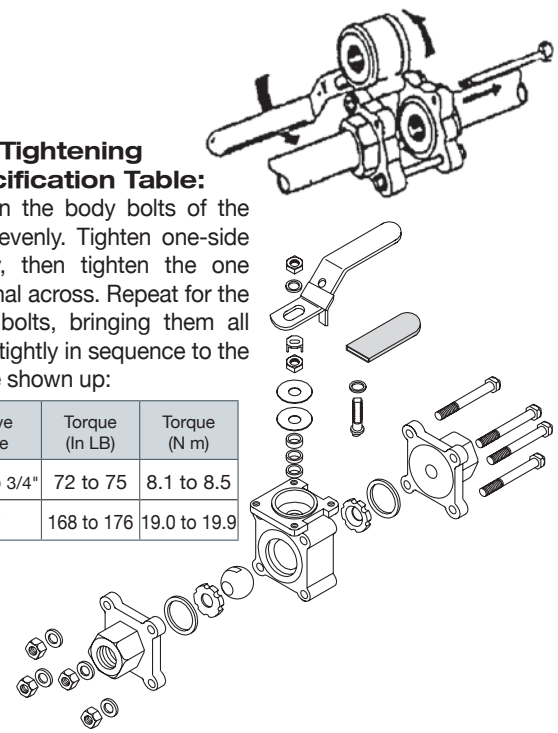

Bolt Tightening Specification Table:

Tighten the body bolts of the valve evenly. Tighten one-side snugly, then tighten the one diagonal across. Repeat for the other bolts, bringing them all down tightly in sequence to the torque shown up:

Valve Size	Torque (In LB)	Torque (N m)
1/4" to 3/4"	72 to 75	8.1 to 8.5
1"	168 to 176	19.0 to 19.9

Warning! For Your Safety

The system designer and user have the sole responsibility for selecting products suitable for their special application requirements, ensuring their safe and trouble-free installation, operation, and maintenance. Application details, material compatibility and product ratings should all be considered for each selected product. Improper selection, installation or use of products can cause property damage or personal injury.

H-700 SERIES
BALL VALVES WITH LOCKING DEVICE

1. Use

For maximum valve life, use the valve only within the stated pressure and temperature range, and in accordance with the corrosion resistance of the material.

2. Operation

To open or close the valve, turn the handle 1/4 turn (90°).

3. Cleaning the Valve

A ball valve can trap fluids in ball cavity when it is in the closed position. If the valve has been used in hazardous medium, decontaminate it before disassembly.

All persons involved in the removal and disassembly of the valve should wear appropriate protective clothing, such as face shields, aprons, gloves, etc.

4. Replacing Seats and Stem Seals.

Type H-700 is designed with Belleville washers for automatic stem-seal wear compensation. If there are signs of leakage through the stem area, replace stem seals.

If there are signs of internal leakage, replace the seat seals.

5. Procedures

Disassembly

With the valve clamped firmly in a vise:

- Remove the nut, spring washer, handle, Belleville washer, thrust washer and top packing. Place in a secure, clean area.
- Remove the end connection/internal nut and body seal.
- Rotate the ball to the closed position and remove the ball and seat seals. Inspect the ball for any surface damage. If there are no nicks, scratches or other surface damage, place the ball in a clean, secure area.
- Remove the stem, and lower the packing from the body cavity.
- Scrap all plastic parts and replace them with authorized HAM-LET parts.
- Clean and inspect all metal parts, and replace as necessary with authorized HAM-LET parts.

Reassembly

Reverse the steps above, taking care to lubricate all parts with an appropriate lubricant.

Notes:

- The end connection/internal nut must be closed firmly.
- The stem nut must be closed with sufficient torque to deflect the belleville washer.

Warning! For Your Safety

The system designer and user have the sole responsibility for selecting products suitable for their special application requirements, ensuring their safe and trouble-free installation, operation, and maintenance. Application details, material compatibility and product ratings should all be considered for each selected product. Improper selection, installation or use of products can cause property damage or personal injury.

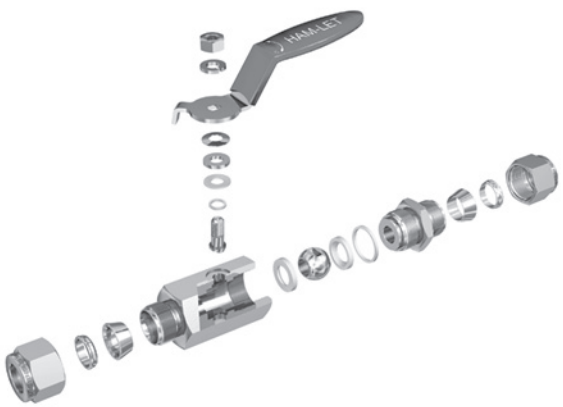

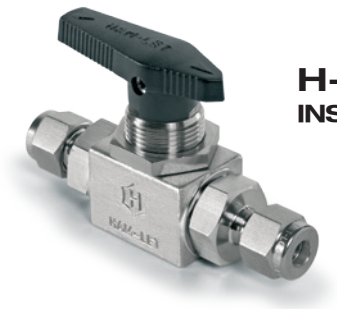

H-6800 SERIES
INSTRUMENTATION BALL VALVES

General Note
When a ball valve is removed or installed in a tube system, a back-up wrench (spanner) must be used on the end connector, NOT on the valve body.
Tube Fitting Connectors (LET-LOK® Twin-Ferrule Compression Fittings)

1. Insert the tubing, nesting it in the counterbore.
2. Ensure that the nut is finger tight, and mark the nut for reference.
3. Now tighten the nut 1 1/4 turns.

Note: For sizes 1/16 to 3/16 inch (2 to 4 mm), tighten 3/4 turn only from finger tight.

Taper Threaded Connectors
(NPT, BSPT, Male or Female)

1. On the male thread of the connector, apply PFTE tape or high-quality sealing compound. When PFTE tape is used, no more than two full turns of the tape should be applied. The tape must not overhang the end of the connector.
2. Screw the valve and connector together until hand tight.
3. With the proper size wrench (spanner), holding both sides of the connector (not the valve body), continue to tighten until a leak-tight joint is achieved.

Welded Connectors

1. We recommend disassembling all valves prior to welding in order to avoid damage to seats and seals.
2. If the valve must be welded when fully assembled, put the valve in the full open position, and continuously purge it with cool gas. People who have been trained in established procedures should perform all the welding tasks.
3. For socket weld ports: insert the tube into the connector until it bottoms out against the stop, then pull it back approximately 1/16 inch (1.5 mm) and weld. This will help to avoid excess static stress.

Packing Adjustment
Due to the varied service applications of the valve, packing adjustment may be occasionally necessary. We recommend Initial adjustment after installation and prior to start-up.

1. Remove the handle by turning the set screw counter clockwise using the appropriate hex-socket tool.
2. Tighten the packing nut 1/8 to 1/4 turn.
3. Replace the handle and retighten the set screw.

Installation of Panel-Mounted Valves

Valve Size	Max. Panel Thickness	Panel Hole Diameter
1/4	11/32" (9mm)	13/16" (2mm)
3/8	-	-
1/2	-	-

1. Remove the handle by turning the set screw counter clockwise using the appropriate hex-socket tool.
2. Insert the valve though the panel hole and assemble the panel nut.
   Note: If the valve is mounted to a thin panel, it may be necessary to fit a spacer (washer) to the valve to allow proper engagement of the panel nut.
3. If required, adjust the stem packing as explained above.
4. Replace the handle and retighten the set screw.

Maximum Allowable Working Pressures and Temperatures

Seat Material	Valve Body Material	
	Brass	**Stainless Steel**
TFM 1600 (Teflon®)	2,800 psig@100°F	2,800 psig@100°F
PCTFE (KEL-F®)	3,000 psig@100°F	6,000 psig@100°F
PEEK	3,000 psig@100°F	6,000 psig@100°F

For allowable pressure at various temperatures, see graph in main catalogue.

Warning! For Your Safety
The system designer and user have the sole responsibility for selecting products suitable for their special application requirements, ensuring their safe and trouble-free installation, operation, and maintenance. Application details, material compatibility and product ratings should all be considered for each selected product. Improper selection, installation or use of products can cause property damage or personal injury.

H-900 SERIES
RELIEF VALVES

INTRODUCTION

The H-900 Series Relief Valves are designed and tested in accordance with MSS standard SP-99-1994 (R2005) - (Instrument Valves). This type of valves is intended for use under relatively low operating pressures (ranging from 10 psig to 225 psig), unfavorable working conditions and can be implemented in either gas or liquid applications. The valves are manufactured from ASTM-A276 body construction and are available in male and female NPT / BSPT pipe threads and LET-LOK (compression) connectors.

General

H-900 series is a relief valve intended for use in low-pressure applications. The valve is normally closed and opens when system pressure reaches a set level. It then returns to the closed position when the system pressure falls bellow the set level.

Features

- Made from St.St 316.
- Service pressure up to 300psig.
- Available set pressures between 10 psig and 225 psig (0.69 to 15.5 Bar).
- Available in male and female NPT / BSPT pipe threads and Let-Lok (compression) connectors.
- Available sizes: 1/4" or 6mm.

Cleaning / Packaging

HAM-LET H-900 Series Relief Valves are treated with HAM-LET Passivation Cleaning and Packaging (Procedure 8075); Oxygen Cleaning and Packaging (Procedure 8055) is available upon request.

Testing

The designs of the HAM-LET H-900 Series Relief Valves have been tested for proof, burst and leakage. Every relief valve is factory-tested for proper set and resealing performance.

SAFETY INSTRUCTIONS

General

- All installation and/or maintenance operations must be obtained when the system pressure is fully relived.
- All installation and/or maintenance operations must follow User Manual Instructions.
- Use only appropriate tools, which are designed and built for the specific operation.
- Plan your action carefully in advance, especially when dealing with extreme temperature, pressure and corrosive materials.
- Use a proper protection and safety devices during maintenance.

Volume considerations

While evaluating volume to be relieved, all system volumes should be considered, i.e.: system lines, pumps, bulk tanks etc.

Warning! For Your Safety

The system designer and user have the sole responsibility for selecting products suitable for their special application requirements, ensuring their safe and trouble-free installation, operation, and maintenance. Application details, material compatibility and product ratings should all be considered for each selected product. Improper selection, installation or use of products can cause property damage or personal injury.

All safety valves which are intended to be used by 'end users' located within the European Community must be 'CE' marked. The distributor of the valves bears the responsibility for the follow-up of the above-mentioned issue, in case he is not the 'end user'.

H-900 SERIES (Cont'd)
RELIEF VALVES

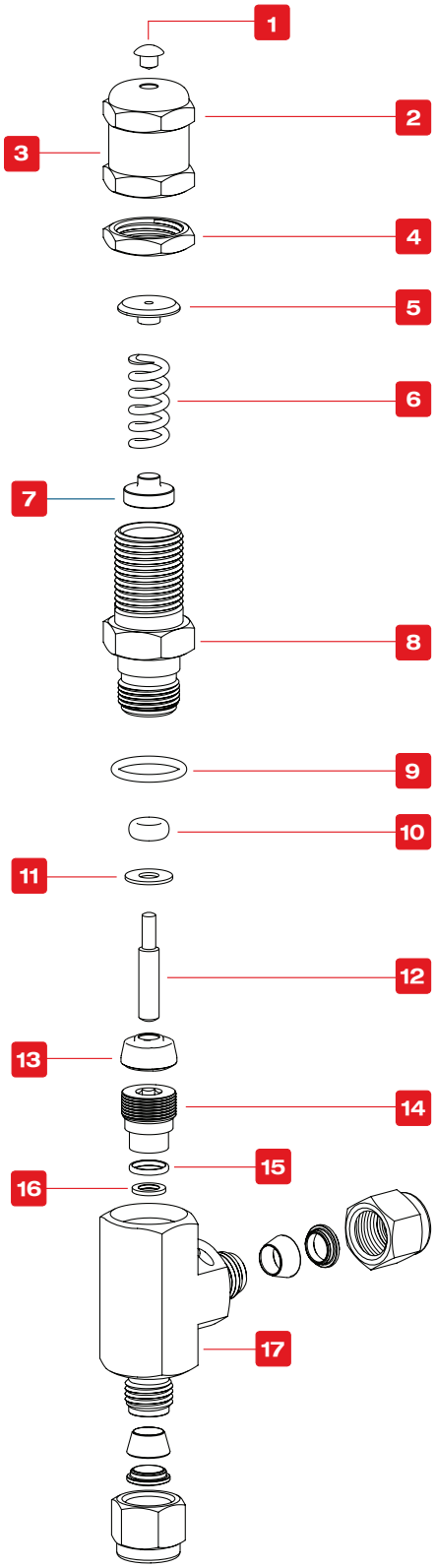

H-900 – MATERIALS			
No.	Part	Qty.	Valve Body Material
1	Cap Plug	1	Polypropylene
2	Adjustment Cap	1	St.St. 316
3	Cap Lable	1	Polyester
4	Spring	1	St.St. 302
5	Locking Nut	1	St.St. 316
6	Spring Support Disc	1	St.St. 316
7	Bonnet	1	St.St. 316
8	O-Ring	1	Viton® (Fluorocarbon)
9	Stem	1	St.St. 316
10	O-Ring	1	Viton® (Fluorocarbon)
11	Retaining Ring	1	PH1-57 Mo
12	Poppet	1	St.St. 316
13	Seal	1	(Viton® (Fluorocarbon
14	Insert	1	St.St. 316
15	Packing	1	PTFE
16	Ring	1	St.St. 316
17	Body	1	St.St. 316

DIMENSIONS						
Description	Connection / size		Dimensions mm:			
	inlet	outlet	H	N	S	L
H900	1/4 LET-LOK®	1/4 LET-LOK®	37	39	50	105
H900	6MM LET-LOK®	6MM LET-LOK®	37	39	50	105
H985	1/4 Male NPT	1/4 Female NPT	32	30	40	100
H995	1/4 Male NPT	1/4 LET-LOK®	32	39	50	100

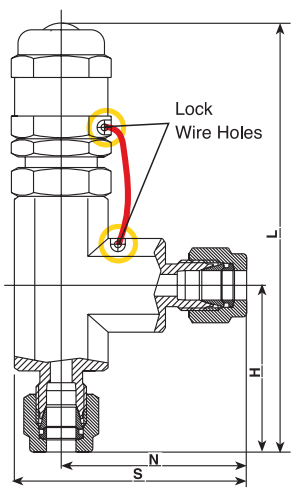

H-900 SERIES (Cont'd)
RELIEF VALVES

MAINTENANCE

Tool requirement
- 3/4" wrench.
- 5/16" Allen (Hex) key.
- O-ring installation and removal tools.
- Retaining ring installation and removal tool.

Cracking Pressure Adjustment
1. Thread adjustment cap (3) onto the bonnet (7) - 9 full turns.
2. Tighten locking nut (5) against the adjustment cap (2) and test for set pressure.
3. Relieve system pressure; unthread the adjustment cap (2) as needed (use manual or 3/4" wrench). Repeat procedure as necessary to obtain desired set pressure.
3.1 A clockwise rotary of the adjustment cap (2) will increase the spring force and the cracking pressure of the valve.
3.2 A counter-clockwise rotary of the adjustment cap (2) will decrease the spring force and the cracking pressure of the valve.
4. Tighten locking nut (5) against the adjustment cap (2).
5. Lock wire the adjustment cap (2) and valve body (17) to maintain relief setting.

H-900 Series – Spring installation / replacement
Warning: Relieve system pressure before any valve maintenance.
Content:
1 x Spring (4)
1 x Label (3)
1 x Lock wire
1 x Lead

1. Select the desired spring according to the Nominal Cracking Pressure Range as shown at the "material of construction" section above.
2. Loosen the locking nut (5) with a 3/4" wrench (clockwise) and remove the adjustment cap (2) with a 3/4" wrench (counter-clockwise) from the bonnet (7).
3. Remove the spring (4).
4. Make sure all components are clean of burrs.
5. Insert the selected spring (4) inside the bonnet (7).
6. Replace existing cracking pressure range label (3) with a new one. Ensure that the pressure range, which is written on the Label (3) is in compliance with the installed spring (4) range.
7. Screw adjustment cap (2) onto bonnet (7) with 3/4" wrench.
8. Perform Cracking Pressure Adjustment procedure described above.

Valve Testing guidelines.
1. Connect the Relief Valve inlet to the pressure source.
2. Connect Relief Valve outlet to any leak detecting device.
3. Increase the inlet pressure slowly.
4. Verify that an initial flow from the outlet will occur at the pre-set pressure.
5. Repeat adjustment procedure as necessary to set the desired cracking pressure.

Note:
For proper maintenance of the H-900 Series Relief Valves, a service cycle and setting validation of at least once each 1/2 year is recommended. The inspection, maintenance and testing can be incorporated into the annual inspection procedure to ensure proper operation and many years of trouble-free service.

The life span of the main valve seal depends upon varied factors, such as:
- Chemical resistance of the seal to the system medium
- The volume of fluid, passed through the valve.
- The operating pressure
- The quantity of dirt and other foreign particles present.

H-900 SERIES SEAL KIT REPLACEMENT.

Content:
1 x O-ring (8)
1 x O-ring (10)
1 x Retaining ring (11)
1 x Bonded poppet (12)

H-900 SERIES (Cont'd)
RELIEF VALVES

Disassembly and Seal Removal

Warning: Relieve system pressure before any valve maintenance.

1. Clamp the valve body in a wise.
2. Remove adjustment cap (2).
3. Remove bonnet (7) from the body (17) - use a 3/4" wrench and rotate counter-clockwise for opening.
4. Remove stem (9) by pulling it from the bonnet (7) bore.
5. Remove O-ring (8) from the bonnet (7).
6. Remove carefully the retaining ring (11) from the bonnet (7).
Caution: The retaining ring is a spring stainless clip. Do not direct it at a person.
7. Remove the o-ring (10) from the bonnet (7).
8. Remove bonded poppet (12) by turning the valve upside down.
9. Discard all soft (wetted) parts.
10. Inspect all parts for nicks, scratches and dents. Discard as appropriate. Replace with HAM-LETparts only.

Reassembly and seal installation

1. Clamp the valve body in a wise.
2. Make sure all parts are clean before installation.
3. Install new bonded poppet (12) in the body (7) (upright position), when the seal of the bonded poppet is faced downward.
4. Install new o-ring (10) (Lubricate with system compatible lubricant) into the bonnet (7).
5. Install new retaining ring (11) (make sure the teeth are pointing away from the quad-ring).
6. Insert the stem (9) into the bonnet (7) through o-ring (9) until it bottoms.
7. Install new o-ring (8) on the bonnet (7) (Lubricate with system compatible lubricant).
8. Install bonnet (7) into body (17) and tighten bonnet to 68N*m (600lb.*in).
9. Perform adjustment procedure before installing in the system.

Troubleshooting
Warning: Relieve system pressure before any valve maintenance.

Symptom	Possible Causes	Corrective Action
Relief valve remains open	Leakage through bonded poppet seal (13)	Replace bonded poppet (12)
Relief valve opens below set pressure	Loss of spring force/Mechanical grip.	Remove adjustment cap (2). Clean spring (4), bonnet (7) and adjustment cap (2) from particles.
Relief valve opens above set pressure	Friction on the mechanical working mechanism. Leakage through any attached auxiliary system such as emergency shutdown system, remote operators, etc.	Check auxiliary systems for leaks, and readjust pressure. Disassemble, clean parts and perform cracking pressure adjustment procedure.
Unable to control the valve for shut-off	The spring range is too low.	Choose H-900HP Series valve with higher-pressure range spring.
Unable to relieve the pressure from the system after cracking	Relief valve too small. Too much gas capacity to complete cycle.	Choose a larger size of Relief valve.

■ For oxygen applications work shall be carried out according to procedures for working with oxygen. In case spare kits are ordered for oxygen clean valves, such kits have to be ordered as oxygen clean.

H-900 HP SERIES
HIGH-PRESSURE RELIEF VALVES

INTRODUCTION

The H-900HP Series Relief Valves are designed and tested in accordance with MSS standard SP-99-1994 (R2005) - (Instrument Valves).This type of valves is intended for use under extremely high operating pressures (ranging from 50 psig to 6000 psig) and unfavorable working conditions, and can be implemented in either gas or liquid applications. The valves are manufactured from ASTM-A276 body construction, and are available in male and female NPT / BSPT pipe threads and LET-LOK (compression) connectors.

General

H-900HP series is a relief valve intended for use in high-pressure applications. The valve is normally closed and opens when system pressure reaches a set level. It then returns to the closed position when the system pressure falls bellow the set level.

Features

- Made from St.St 316.
- Service pressure up to 6000 psig.
- Available set pressures between 50 psig and 6,000 psig (3.44 to 413.8 Bar).
- Color-coded springs for each pressure range
- Replaceable springs for a wide range of pressures
- Available in male and female NPT / BSPT pipe threads and LET-LOK (compression) connectors.
- Available sizes: 1/4" or 6mm.

Cleaning / Packaging

HAM-LET H-900HP Series Relief Valves are treated with HAM-LET Passivation Cleaning and Packaging (Procedure 8075); Oxygen Cleaning and Packaging (Procedure 8055) is available upon request.

Testing

The designs of the HAM-LET H-900HP Series Relief Valves have been tested for proof, burst and leakage. Every relief valve is factory-tested for proper set and resealing performance.

SAFETY INSTRUCTIONS

General

- All installation and/or maintenance operations must be obtained when the system pressure is fully relived.
- All installation and/or maintenance operations must follow User Manual Instructions.
- Use only appropriate tools, which are designed and built for the specific operation.
- Plan your action carefully in advance, especially when dealing with extreme temperature, pressure and corrosive materials.
- Use a proper protection and safety devices during maintenance.

Volume considerations

While evaluating volume to be relieved, all system volumes should be considered, i.e.: system lines, pumps, bulk tanks etc.

Warning! For Your Safety

The system designer and user have the sole responsibility for selecting products suitable for their special application requirements, ensuring their safe and trouble-free installation, operation, and maintenance. Application details, material compatibility and product ratings should all be considered for each selected product. Improper selection, installation or use of products can cause property damage or personal injury.

All safety valves which are intended to be used by 'end users' located within the European Community must be 'CE' marked. The distributor of the valves bears the responsibility for the follow-up of the above-mentioned issue, in case he is not the 'end user'.

H-900 HP SERIES (Cont'd)
HIGH-PRESSURE RELIEF VALVES

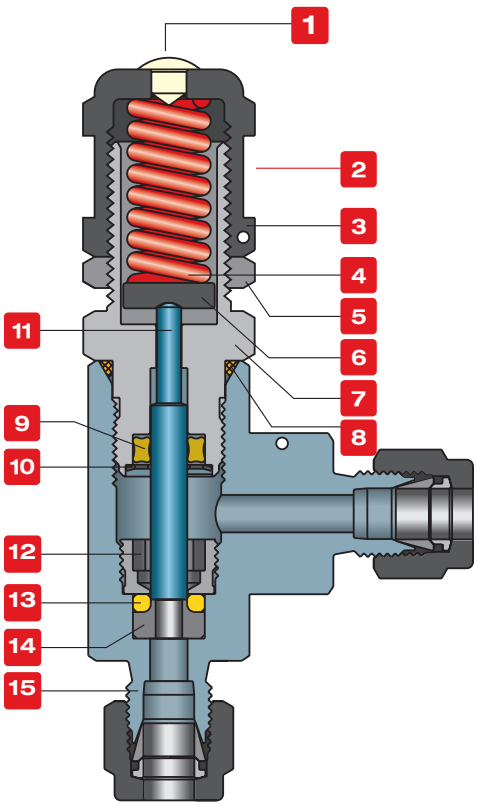

H-900 HP MATERIALS

No.	Part	Qty.	Valve Body Material
1	Cap Plug	1	PTFE
2	Label	1	PVC
3	Adjustment Cap	1	St.St 316
4	Spring	1	St.St. 302,17-7PH
5	Lower Spring Button	1	St.St 316
6	Locking Nut	1	St.St 316
7	Bonnet	1	St.St 316
8	O-Ring	1	Viton® (Fluorocarbon)
9	Quad Ring	1	Viton® (Fluorocarbon)
10	Retaining Ring	1	PH15-7Mo
11	Poppet	1	St.St 316
12	Clamps Screw	1	St.St 316
13	O-Ring	1	Viton® (Fluorocarbon)
14	Insert	1	St.St 316
15	Body	1	St.St 316

DIMENSIONS

Description	Connection / size		Dimensions mm:			
	inlet	outlet	H	N	S	L
H900-HP	1/4 LET-LOK®	1/4 LET-LOK®	37	39	50	105
H900-HP	6MM LET-LOK®	6MM LET-LOK®	37	39	50	105
H985-HP	1/4 Male NPT	1/4 Female NPT	32	30	40	100
H995-HP	1/4 Male NPT	1/4 LET-LOK®	32	39	50	100

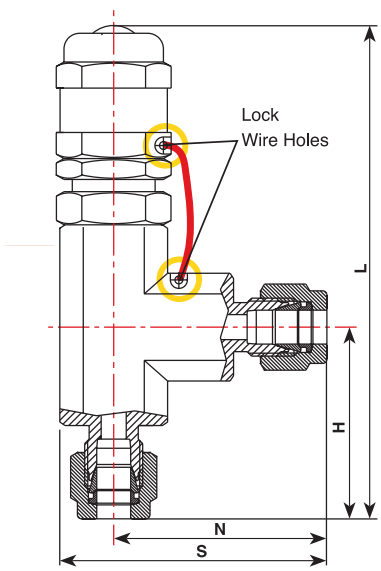

NOMINAL CRACKING – PRESSURE RANGE

psig	Bars	Spring Designator	Color
50-350	24 - 3.4	A	White
350-750	24 - 51.5	B	Blue
750-1500	103 - 51.5	C	Gold
1500-2250	103 - 155	D	Turquoise
2250-3000	206 - 155	E	Green
3000-4000	206 - 275	F	Red
4000-5000	344 - 275	G	Silver
5000-6000	344 - 413	H	Black

A B C D E F G H

H-900 HP SERIES (Cont'd)
HIGH-PRESSURE RELIEF VALVES

MAINTENANCE

Tool requirement
- 3/4" wrench.
- 1/4" Allen (Hex) key.
- O-Ring installation and removal tools.
- Retaining ring installation and removal tool.

Cracking Pressure Adjustment
1. Thread adjustment cap (3) onto the bonnet (7) - 9 full turns.
2. Tighten locking nut (6) against the adjustment cap (3) and test for set pressure.
3. Relieve system pressure; unthread the adjustment cap (3) as needed (use manual or 3/4" wrench). Repeat procedure as necessary to obtain desired set pressure.
3.1 A clockwise rotary of the adjustment cap (3) will increase the spring force and the cracking pressure of the valve.
3.2 A counter-clockwise rotary of the adjustment cap (2) will decrease the spring force and the cracking pressure of the valve.
4. Tighten locking nut (6) against the adjustment cap (3).
5. Lock wire the adjustment cap (3) and valve body (15) to maintain relief setting.

H-900 HP Series
Spring installation / replacement
Warning: Relieve system pressure before any valve maintenance.
Content:
1 x Spring (4)
1 x Label (3)
1 x Lock wire
1 x Lead

1. Select the desired spring according to the Nominal Cracking Pressure Range as shown at the "material of construction" section above.
2. Loosen the locking nut (6) with a 3/4" wrench (clockwise) and remove the adjustment cap (3) with a 3/4" wrench (counter-clockwise) from the bonnet (7).
3. Remove the spring (4).
4. Make sure all components are clean of burrs.
5. Insert the selected spring (4) inside the bonnet (7).
6. Replace existing cracking pressure range label (2) with a new one. Ensure that the pressure range, which is written on the Label (2) is in compliance with the installed spring (4) range.
7. Screw adjustment cap (3) onto bonnet (7) with 3/4" wrench.
8. Perform Cracking Pressure Adjustment procedure described above.

Valve Testing guidelines.
1. Connect the Relief valve's inlet to the pressure source.
2. Connect Relief valve's outlet to any leak detecting device.
3. Increase the inlet pressure slowly.
4. Verify that an initial flow from the outlet will occur at the pre-set pressure.
5. Repeat adjustment procedure as necessary to set the desired cracking pressure.

Note:
For proper maintenance of the H-900HP Series Relief Valves, a service cycle and setting validation of at least once each 1/2 year is recommended. The inspection, maintenance and testing can be incorporated into the annual inspection procedure to ensure proper operation and many years of trouble-free service.

The life span of the main valve seal depends upon varied factors, such as:
- Chemical resistance of the seal to the system medium
- The volume of fluid, passed through the valve.
- The operating pressure
- The quantity of dirt and other foreign particles present.

H-900 HP SERIES SEAL KIT REPLACEMENT.

Content:
1 x O-Ring (8)
1 x Quad-ring (9)
1 x Retaining ring (10)
1 x O-Ring (13)

H-900 HP SERIES (Cont'd)
HIGH–PRESSURE RELIEF VALVES

Disassembly and Seal Removal

Warning: Relieve system pressure before any valve maintenance.

1. Clamp the valve body in a wise.
2. Remove adjustment cap (3).
3. Remove bonnet (7) from the body (15) - use a 3/4" wrench and rotate counter-clockwise for opening.
4. Remove poppet (11) by pulling it from the bonnet (7) bore.
5. Remove O-ring (8) from the bonnet (7).
6. Remove carefully the retaining ring (10) from the bonnet (7).
Caution: The retaining ring is a spring stainless clip. Do not direct it at a person.
7. Remove the Quad-ring (9) from the bonnet (7).
8. Remove the clamp screw (12) from the body (15). Rotate the clamp screw counter-clockwise for opening. Use a 1/4" Allen (hex) key.
9. Remove O-ring (13) from the body (7).
10. Discard all soft (wetted) parts.
11. Inspect all parts for nicks, scratches and dents. Discard as appropriate. Replace with Ham-Let parts only

Reassembly and seal installation

1. Clamp the valve body in a wise.
2. Make sure all parts are clean before installation.
3. Install new O-ring (13) in the body (7) (Lubricate with system compatible lubricant).
4. Thread clamp screw (12) in the body (15). Tight permanently with 1/4" Allen (hex) key.
5. Install new quad-ring (9) (Lubricate with system compatible lubricant) into the bonnet (7).
6. Install new retaining ring (10) (make sure the teeth are pointing away from the quad-ring).
7. Insert the poppet (11) into the bonnet (7) through the quadring (9) until it bottoms.
8. Install new o-ring (8) on the bonnet (7) (Lubricate with system compatible lubricant).
9. Install bonnet (7) into body (15) and tighten bonnet to 68N*m (600lb.*in).
10. Perform adjustment procedure before installing in the system.

Troubleshooting

Warning: Relieve system pressure before any valve maintenance.

Symptom	Possible Causes	Corrective Action
Relief valve remains open	Leakage through O-Ring seal (13)	Replace O-Ring (13)
Relief valve opens below set pressure	Loss of spring force/ Mechanical grip.	Remove adjustment cap (3). Clean spring (4), bonnet (7) and adjustment cap (3) from particles.
Relief valve opens above set pressure	Friction on the mechanical working mechanism. Leakage through any attached auxiliary system such as emergency shutdown system, remote operators, etc.	Check auxiliary systems for leaks, and readjust pressure. Disassemble, clean parts and perform cracking pressure adjustment procedure.
Unable to control the valve for cracking	The spring range is too high.	Choose a spring with lower pressure range.
Unable to control the valve for shut-off	The spring range is too low.	Choose a spring with higher-pressure range.
Unable to relieve the pressure from the system after cracking	Relief valve too small. Too much gas capacity to complete cycle.	Choose a larger size of Relief valve.

■ For oxygen applications work should be carried out according to procedures for working with oxygen. In case spare kits are ordered for oxygen clean valves, such kits have to be ordered as oxygen clean.

H-600 SERIES
T-TYPE & IN-LINE FILTERS

H-600 IN-LINE FILTER
Customer's Instructions for Disassembly and Reassembly

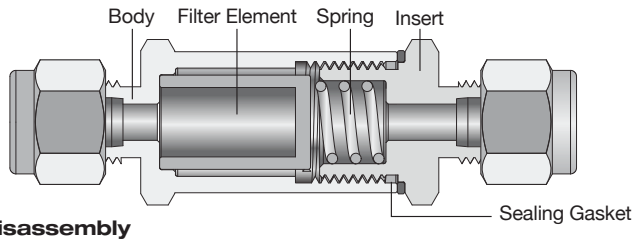

Disassembly
Use a suitable wrench to loosen the body from the insert.
Then remove the element, spring and sealing gasket.

Reassembly
1. Prior to reassembly, clean the filter house and make sure that all other components are clean and free of contaminants.
2. Place the element in the filter body so that the open end of the element is parallel to the element seat diameter.
3. Lubricate the sealing gasket gently. The recommended oil: Fluorolube grade T-80. Put the sealing gasket in its place.
4. Mount the sealing gasket on the insert.
5. Place the spring inside the insert.
6. Close the nut manually. Make sure that the sealing gasket is correctly placed.
7. Use a moment wrench to affix the insert more tightly onto the body, according to the Table below.
8. Connect the filter to the pressure line and check the filter for correct operation. Use liquid leak detectors to ensure there is no leakage.

Table Nut Tightening Moment lb-in (N-m)

	Standard Assembly		With no lubrication on the sealing gasket (used for special applications)
	SS	**Brass**	**SS**
H-600 -1/8 H-600-3mm	150 (17)	135 (15)	-
H-600 -1/4 H-600 - 6mm	380 (43)	345 (39)	530 (60)
H-600 -3/8 H-600 -8mm H-600 -10mm H-600 -12mm H-600 -1/2	530 (60)	470 (53)	830 (94)

H-600 FILTER T-TYPE
Customer Instructions for Disassembly and Reassembly

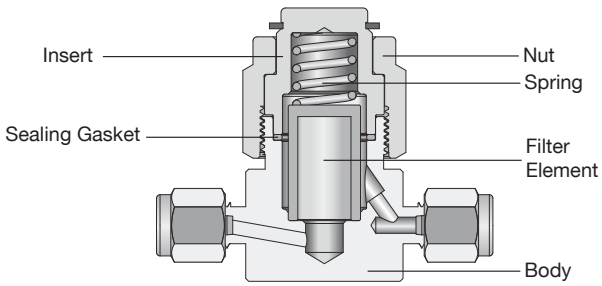

Disassembly
Use a suitable wrench to loosen the body from the insert.
Then remove the element, spring and sealing gasket.

Reassembly
1. Prior to reassembly, clean the filter house and make sure that all other components are clean and free of contaminants.
2. Place the element in the filter body so that the open end of the element is parallel to the element seat diameter.
3. Lubricate the sealing gasket gently. The recommended oil: Fluorolube grade T-80. Put the sealing gasket in its place.
4. Place the spring inside the insert.
5. Close the nut manually.
6. Use a moment wrench to tighten the nut, according to the Table below.
7. Connect the filter to the pressure line and check the filter for correct operation. Use liquid leak detectors to ensure there is no leakage.

Table Nut Tightening Moment lb-in (N-m)

	Standard Assembly		With no lubrication on the sealing gasket (used for special applications)	
	SS	**Brass**	**SS**	**Brass**
H-600R -1/8 H-600R-3mm H-600R -1/4 H-600R - 6mm	530 (60)	470 (53)	575 (65)	470 (53)
H-600R -3/8 H-600R -8mm H-600R -10mm H-600R -12mm H-600R -1/2	630 (71)	470 (53)	680 (77)	470 (53)

Warning! For Your Safety
The system designer and user have the sole responsibility for selecting products suitable for their special application requirements, ensuring their safe and trouble-free installation, operation, and maintenance. Application details, material compatibility and product ratings should all be considered for each selected product. Improper selection, installation or use of products can cause property damage or personal injury.

Installation instructions Rev_03 Aug. 2011

WWW.HAM-LET.COM

HAM-LET®
ADVANCED CONTROL TECHNOLOGY

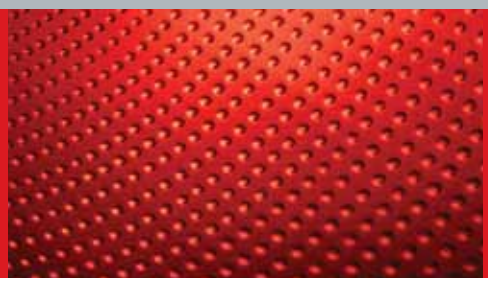

Ham-Let Catalog
qr.ham-let.com/flip

All material herein is the property of Ham-Let. It is forbidden to copy, duplicate or use the material without the permission of the company.

All product names and company names are trademarks of their respective owners.

Ham-Let catalog **3901200**.
Printed September 2011

The most updated Ham-Let catalog is available on www.ham-let.com

Ham-Let USA:
12565 West Airport Blvd.
Sugar Land, Texas 77478
Tel: +1 281 5664900
Fax: +1 281 5664910
e-mail: usa@ham-let.com

Ham-Let Canada:
3190 Ridgeway Drive, Unit 33
Mississauga, Ontario, L5L 5S8
Tel: +1 905 6089996
Fax: +1 905 6088661
e-mail: canada@ham-let.com

Ham-Let UK:
Unit 1, Lindfield Enterprise Park
Lewes Road, Lindfield
Haywards Heath, West Sussex
RH16 2LH
Tel: +44 1444 487555
Fax: +44 1444 487666
e-mail: uk@ham-let.com

Ham-Let Germany:
Dornacher Strasse 3a,
D-85622 Feldkirchen
Tel: +49 89 90778060
Fax: +49 89 90778070
e-mail: gmbh@ham-let.com

Ham-Let France:
Siège Social: PARK AVENIR,
Zone de Sacuny,
Avenue Marcel MERIEUX,
bâtiment B7, 69530, BRIGNAIS
Tél: +33 4 78950342
Fax: +33 4 72310576
e-mail: france@ham-let.com

Ham-Let Russia:
127083, Russian Federation, Moscow,
8 Marta Street 10, B.12, Off. 107
Tel: +7 495 6516238
Fax: +7 495 6516238
e-mail: russia@ham-let.com

Ham-Let Motoyama Japan HMJ
Shin-Nihonbashi No2 Nagaoka, Bldg 3f
1-10-9, Horidome-Cho, Nihonbashi,
Chuo-Ku, Tokyo 103-0012
Tel: +81-3-36685321
Fax: +81-3- 36647027
e-mail: tokyo@ham-let.co.jp